Consilium Manuals

Consilium

When Safety Matters

Gas Detection System
Salwico GDS for LNG

Samsung Heavy Industries

Hull no. H2074

CMAB Ref: SG-28567

Gas Detection Systems

Consilium

21.01.2015 YSN/WYL

LIST OF DRAWINGS

Project: SHI H 2074 **SG-28567**

Gas Detection System CCP & Sampling system SW2020

Page	Document no/Art. No.	Rev	Date	Description
1				Front-page
2	28567-LOD	B	150121	List of drawings
3-6	28567-MPL	A	150121	Location of detection points, list including name of location
7-8	28567-ASB	-	130410	All System Block diagram
SALWICO GDS GAS ALARM SYSTEM FOR CARGO & E/R AREA				
9-10	28567-GDS	B	150121	Scope of supply list,
11-13	28567.GDS.02.01	-	130410	Gas central cabinet, dimension drawing
14-27	28567.GDS.03.01	B	150121	Gas central cabinet, connection drawings
28-32	28567.GDS.02.02	-	130410	Pump & Detector cabinet, dimension drawing
33-39	28567.GDS.03.02	-	130410	Pump & Detector cabinet, connection drawing
40-73				Datasheet
SW2020 GAS SAMPLING SYSTEM FOR CARGO AREA				
74-75	28567-GSS	-	130410	Scope of supply list
76-85	28567.GSS.02.01	A	130822	Dimension & Connection drawings
86-93			130410	Datasheets
94-95	28567-SPARE	A	130822	Scope of supply list for spare parts
The above drawings have been approved for release:				Sign Date: 21.01.2015

ISO 14001 BUREAU VERITAS Certification
ISO 9001 BUREAU VERITAS Certification

SALWICO FIXED GAS DETECTION SYSTEM

Location of detectors **2015/01/21**

Engine Room Area

Type of detector: Optima Plus IR-Detector (Salwico GD True IR) with Bartec EEx Junction Box for Methane 0-100% LEL

BBE, address	Location Name	Warning Alarm	High Alarm	Remark
1.11.1	E/R SUP. FAN NO.1 F/C A-DK LEVEL NO.1 VENT FAN RM	30% LEL	60% LEL	
1.11.2	E/R SUP. FAN NO.2 F/C A-DK LEVEL NO.1 VENT FAN RM	30% LEL	60% LEL	
1.11.3	E/R NATURAL EXH VENT(S) F/C STR-1	30% LEL	60% LEL	
1.11.4	E/R NATURAL EXH VENT (P) F/S STR-1	30% LEL	60% LEL	
1.12.1	E/R SUP. FAN NO.3 F/C A-DK LEVEL NO.2 VENT FAN RM	30% LEL	60% LEL	
1.12.2	E/R SUP. FAN NO.4 F/C A-DK LEVEL NO.2 VENT FAN RM	30% LEL	60% LEL	
1.12.3	EM'CY GEN RM AIR INLET (FR33,LP18)	30% LEL	60% LEL	
2.13.1	S14. GCU VALVE UNIT RM F/C B-DK FR35C	30% LEL	60% LEL	
2.13.2	S14. GCU UNDER NEAR UV CELL (B-DK UNDER) FR32C	30% LEL	60% LEL	
2.13.3	S14. GCU GVU RM EXT. FAN OUTLET (B-DK) FR32 LS7	30% LEL	60% LEL	5K-200A Flange
2.14.1	NO.1 MGE CRANKCASE AIR VENT			To monitor
2.14.2	NO.2 MGE CRANKCASE AIR VENT			To monitor
2.14.3	STBD MAIN G/E CFW EXP. TK VENT	30% LEL	60% LEL	
2.14.4	NO.1 GDCAB PUMP AND DETECTOR CABINET INTERNAL GAS LEAKAGE.	30% LEL	60% LEL	
3.15.1	NO.3 MGE CRANKCASE AIR VENT			To monitor
3.15.2	NO.4 MGE CRANKCASE AIR VENT			To monitor
3.15.3	NO.2 GDCAB PUMP AND DETECTOR CABINET INTERNAL GAS LEAKAGE	30% LEL	60% LEL	

Accommodation

Type of detector: Optima Plus IR-Detector (Salwico GD True IR) with Bartec EEx Junction Box for Methane 0-100% LEL

Loop, address	Location Name	Warning Alarm	High Alarm	Remark
4.16.1	ACCOMM. UPP-DK FWD PORT ENT (102)	30% LEL	60% LEL	
4.16.2	ACCOMM. UPP-DK AHU RM FRESH AIR INTAKE	30% LEL	60% LEL	5K-200A Flange
4.16.3	ACCOMM. UPP-DK GALLEY FRESH AIR INTAKE	30% LEL	60% LEL	5K-200A Flange
4.16.4	ACCOMM. A-DK FWD PORT ENT(201)	30% LEL	60% LEL	
4.17.1	ACCOMM. UPP-DK FWD STBD ENT (105)	30% LEL	60% LEL	
4.17.2	ACCOMM. A-DK FWD STBD ENT (202)	30% LEL	60% LEL	
4.17.3	ACCOMM. A-DK GALLEY PACK. AIR CON	30% LEL	60% LEL	5K-200A Flange
4.17.4	ACCOMM. B-DK FWD STBD ENT (303)	30% LEL	60% LEL	
5.18.1	ACCOMM. B-DK FWD P ENT (302)	30% LEL	60% LEL	
5.19.2	NAV. DK CENT CEILING (601)	30% LEL	60% LEL	

DF Engines and GCU Area

Type of detector: Optima Plus IR-Detector (Salwico GD True IR) with Bartec EEx Junction Box for Methane 0-100% LEL

Loop, address	Location Name	Warning Alarm	High Alarm	Remark
6.20.1	NO.1 MGE CENT NEAR ENGINE FR30	30% LEL	60% LEL	
6.20.2	NO.1 MGE FWD PIPE DUCT AIR INLET FR31	30% LEL	60% LEL	
6.20.3	NO.1 MGE EXHAUST DAMPER FR43 (GE RM OUTSIDE)	30% LEL	60% LEL	
6.21.1	NO.2 MGE CENT NEAR ENGINE FR30	30% LEL	60% LEL	
6.21.2	NO.2 MGE FWD STBD PIPE DUCT AIR INLET FR35	30% LEL	60% LEL	
6.21.3	NO.2 MGE FWD PORT PIPE DUCT AIR INLET FR35	30% LEL	60% LEL	
6.21.4	NO.2 MGE EXHAUST DAMPER FR43 (GE RM OUTSIDE)	30% LEL	60% LEL	
7.22.1	NO.1 MGE AFT PIPE DUCT (STBD GVU RM)	30% LEL	60% LEL	
7.22.2	NO.1 GVU (STBD GVU RM)	30% LEL	60% LEL	
7.22.3	NO.2 MGE AFT PIPE DUCT (STBD GVU RM)	30% LEL	60% LEL	
7.22.4	NO.2 GVU (STBD GVU RM)	30% LEL	60% LEL	
7.23.1	NO.1 MGE GVU RM BOG EXTRACTION FAN OUTLET (E/R 2ND FR16 LS14)	30% LEL	60% LEL	5K-200A Flange
7.23.2	NO.2 MGE GVU RM BOG EXTRACTION FAN OUTLET (E/R 2ND FR16 LS14)	30% LEL	60% LEL	5K-200A Flange
8.24.1	NO.3 MGE CENT NEAR ENGINE FR30	30% LEL	60% LEL	
8.24.2	NO.3 MGE FWD STBD PIPE DUCT AIR INLET FR35	30% LEL	60% LEL	
8.24.3	NO.3 MGE FWD PORT PIPE DUCT AIR INLET FR35	30% LEL	60% LEL	
8.24.4	NO.3 MGE EXHAUST DAMPER FR43 (GE RM OUTSIDE)	30% LEL	60% LEL	
8.25.1	NO.4 MGE CENT NEAR ENGINE FR30	30% LEL	60% LEL	
8.25.2	NO.4 MGE FWD STBD PIPE DUCT AIR INLET FR35	30% LEL	60% LEL	
8.25.3	NO.4 MGE FWD PORT PIPE DUCT AIR INLET FR35	30% LEL	60% LEL	
8.25.4	NO.4 MGE EXHAUST DAMPER FR43 (GE RM OUTSIDE)	30% LEL	60% LEL	
9.26.1	NO.3 MGE AFT PIPE DUCT (PORT GVU RM)	30% LEL	60% LEL	
9.26.2	NO.3 MGE GVU (PORT GVU RM)	30% LEL	60% LEL	
9.26.3	NO.4 MGE AFT PIPE DUCT (PORT GVU RM)	30% LEL	60% LEL	
9.26.4	NO.4 GVU (STBD GVU RM)	30% LEL	60% LEL	

Regas Plant Area

Type of detector: Optima Plus IR-Detector (Salwico GD True IR) with Bartec EEx Junction Box for Methane 0-100% LEL & inside of Pump and Detection cabinet

Loop, address	Location Name	Warning Alarm	High Alarm	Remark
10.27.1	HIGH PRESSURE MANIFOLD STBD	30% LEL	60% LEL	
10.28.1	RECONDENSER UNDER FOR REGAS PLANT	30% LEL	60% LEL	
10.28.2	NO.1 REGAS SKID	30% LEL	60% LEL	
10.28.3	NO.2 REGAS SKID	30% LEL	60% LEL	
10.28.4	NO.3 REGAS SKID	30% LEL	60% LEL	
10.29.1	FWD REGAS SWBD ROOM ENT. DOOR	30% LEL	60% LEL	
10.29.2	NO.1 FWD PP RM AIR INTAKE	30% LEL	60% LEL	5K-200A Flange
10.29.3	NO.2 FWD PP RM AIR INTAKE	30% LEL	60% LEL	5K-200A Flange
10.30.1	REGAS VENT MAST	60% LEL	90% LEL	
10.30.2	SEA WATER LINE DISCH. FOR REGAS PLANT	30% LEL	60% LEL	
10.30.3	NO.3 GDCAB PUMP AND DETECTOR CABINET INTERNAL GAS LEAKAGE.	30% LEL	60% LEL	
10.31.1	HIGH PRESSURE MANIFOLD PORT	30% LEL	60% LEL	

SW2020 GAS SAMPLING SYSTEM

Infrared type gas detection system for cargo part, sampling type

Type of detectors: Two Optima Plus IR-Detector Methane 0-100% LEL and Two Optima Plus IR-Detector Methane 0-100%VOL

No.	Location Name	Tube Length (m)	Sample time (s)	Warning	Alarm	Remark
1	No.1 CARGO TANK IBS (1) – GAS DOME			15% VOL	30% VOL	
2	No.1 CARGO TANK IBS (2) – LIQUID DOME			15% VOL	30% VOL	
3	No.1 CARGO TANK IS			15% LEL	30% LEL	
4	No.2 CARGO TANK IBS (1) – GAS DOME			15% VOL	30% VOL	
5	No.2 CARGO TANK IBS (2) – LIQUID DOME			15% VOL	30% VOL	
6	No.2 CARGO TANK IS			15% LEL	30% LEL	
7	No.3 CARGO TANK IBS (1) – GAS DOME			15% VOL	30% VOL	
8	No.3 CARGO TANK IBS (2) – LIQUID DOME			15% VOL	30% VOL	
9	No.3 CARGO TANK IS			15% LEL	30% LEL	
10	No.4 CARGO TANK IBS (1) – GAS DOME			15% VOL	30% VOL	
11	No.4 CARGO TANK IBS (2) – LIQUID DOME			15% VOL	30% VOL	
12	No.4 CARGO TANK IS			15% LEL	30% LEL	
13	No.1 COFFERDAM			30% LEL	60% LEL	
14	No.2 COFFERDAM			30% LEL	60% LEL	
15	No.3 COFFERDAM			30% LEL	60% LEL	
16	No.4 COFFERDAM			30% LEL	60% LEL	
17	No.5 COFFERDAM			30% LEL	60% LEL	
18	DUCT KEEL FWD			30% LEL	60% LEL	
19	DUCT KEEL AFT			30% LEL	60% LEL	
20	GAS VENT DRAIN TANK FOR CONDENSATE			30% LEL	60% LEL	DRAIN SEPERATOR FILTER
21	CARGO MACHINERY ROOM FWD			30% LEL	60% LEL	
22	CARGO MACHINERY ROOM AFT			30% LEL	60% LEL	
23	ELECTRIC MOTOR ROOM			30% LEL	60% LEL	
24	PASSAGE WAY STBD FWD			30% LEL	60% LEL	
25	PASSAGE WAY PORT FWD			30% LEL	60% LEL	
26	PASSAGE WAY STBD AFT			30% LEL	60% LEL	
27	PASSAGE WAY PORT AFT			30% LEL	60% LEL	
28	NO.1 CARGO TK VENT MAST			60% LEL	90% LEL	
29	NO.2 CARGO TK VENT MAST			60% LEL	90% LEL	
30	NO.3 CARGO TK VENT MAST			60% LEL	90% LEL	
31	NO.4 CARGO TK VENT MAST			60% LEL	90% LEL	
32	GAS VENT DRAIN TANK FOR BILGE			30% LEL	60% LEL	DRAIN SEPERATOR FILTER
33	BOSUN STORE			30% LEL	60% LEL	
34	FWD PUMP ROOM			30% LEL	60% LEL	
35	DEGASING TANK FOR INTER/AFTER COOLER			30% LEL	60% LEL	DRAIN SEPERATOR FILTER
36	INSIDE GAS SAMPLING CABINET			15% LEL	30% LEL	IF THE SYSTEM DETECTS MORE THAN 30% LEL INSIDE CABINET THE SYSTEM AUTOMATICALLY SHUTS DOWN.
	TOTAL SAMPLING TIME USING 2 PUMP (seconds)					
	TOTAL SAMPLING TIME USING 2 PUMP (minutes)					

Note: These projects two pumps are used, one analyzing pump and one pre-suction pump.The sampling time mentioned is T90.

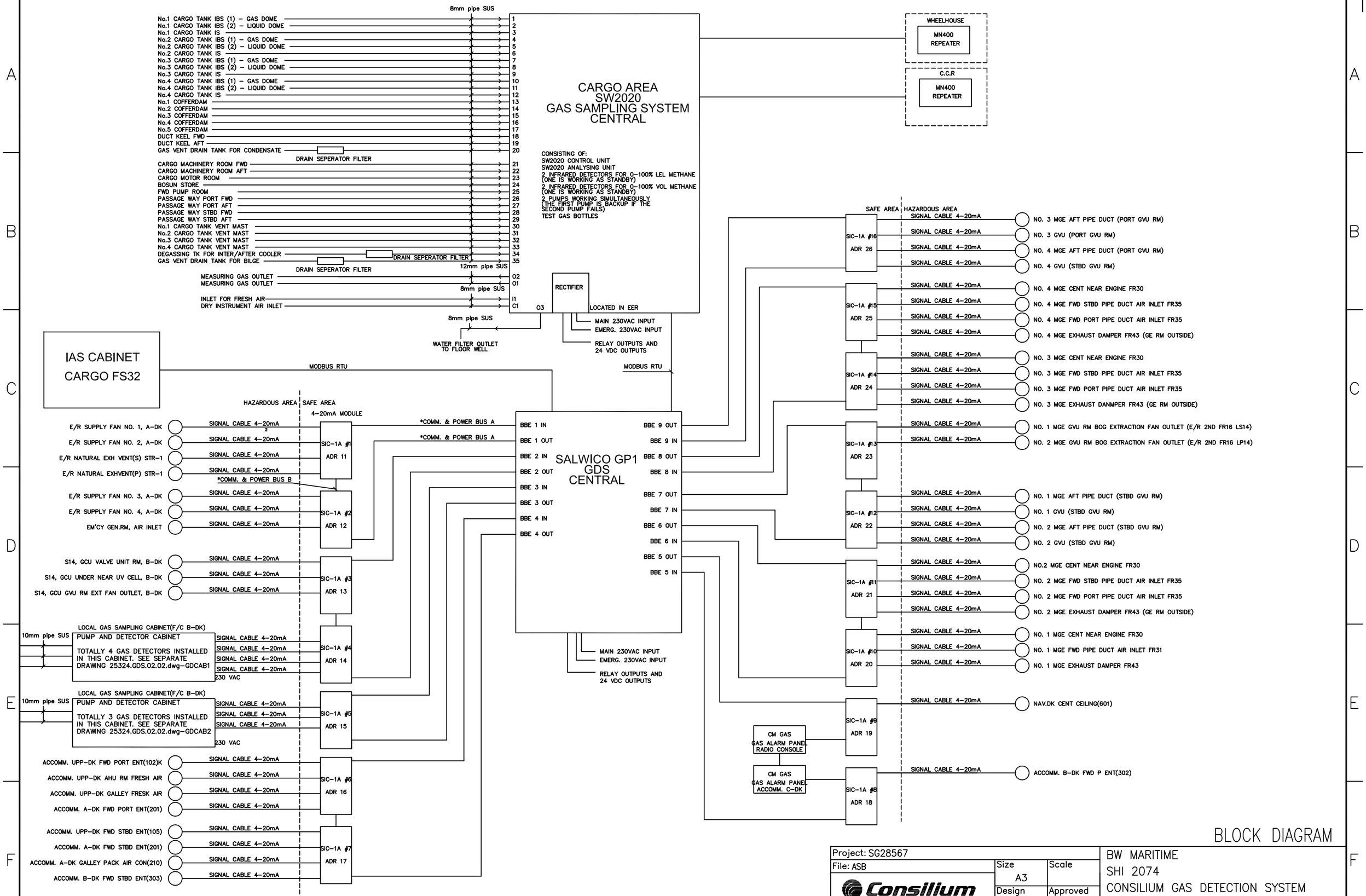

BLOCK DIAGRAM

Rev.	Revision note	Date	Sign.
–			

Project: SG28567
File: ASB

Consilium
Göteborg, Sweden
www.consilium.se
Copyright Consilium Marine AB

Size	Scale
A3	
Design	Approved
YSN	WYL
Date: 2013–04–10	

BW MARITIME
SHI 2074
CONSILIUM GAS DETECTION SYSTEM
SALWICO GDS+SW2020

Drawing no.	Ver.	Page
ASB	–	/

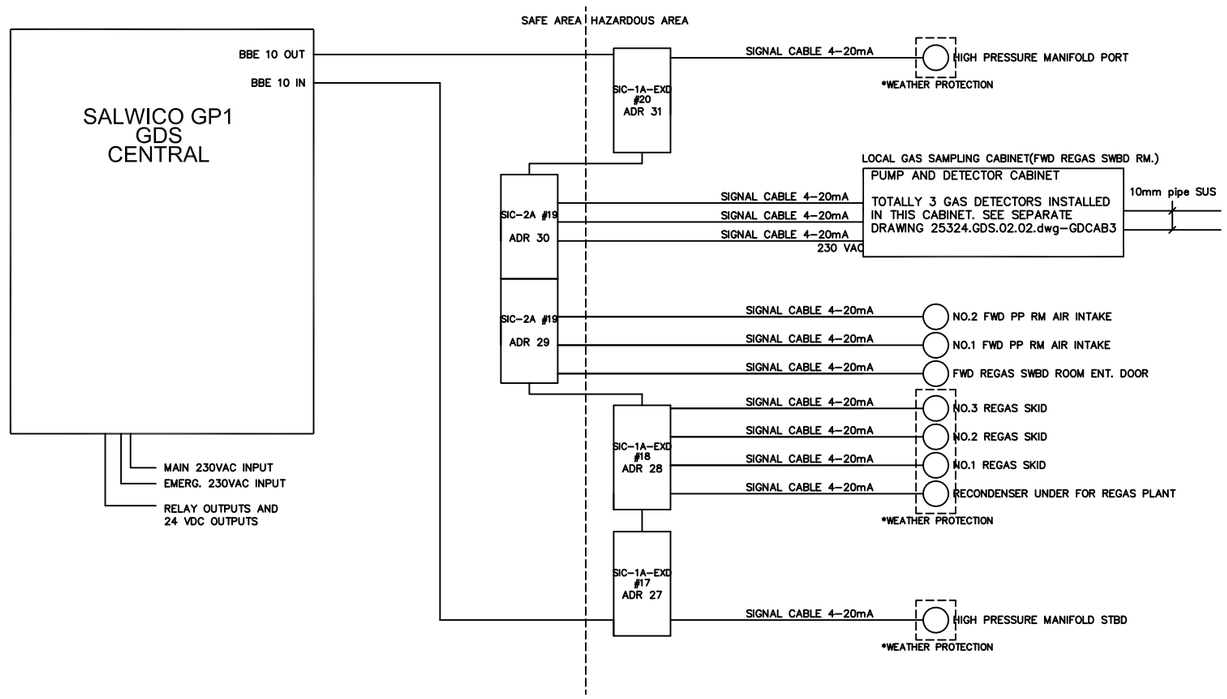

BLOCK DIAGRAM

Project: SG28567			BW MARITIME SHI HN2074 CONSILIUM GAS DETECTION SYSTEM SALWICO GDS+SW2020
File: ASB	Size A3	Scale	
Consilium Göteborg, Sweden www.consilium.se Copyright Consilium Marine AB	Design YSN	Approved WYL	
	Date: 2013-04-10		Drawing no. ASB-2 / Ver. – / Page /

Rev.	Revision note	Date	Sign.
–			

Consilium Marine

2015-01-21 YSN/WYL Rev.B

SCOPE OF SUPPLY LIST

Product Salwico Gas Detection System

Our Ref. No. SG-28567

Shipyard Samsung Heavy Ind. Co. LTD.
530, Jangpyung-Ri, Shinhyun-up
P.O. Box Go Hyun 9
Koje-city, Kyungnam
REP. OF KOREA

NB H 2074

Item	Description	Q´ty
1	**Salwico GDS central and control unit, including:** - 1pc Control panel, with keypad and clear text display in full color. - 1pc Cabinet 600x800x210 with FL21 Multi-flange in MUNSELL 7.5 BG 7/2 - 3pcs Power supply for Mains and Emergency and two for redundancy - 3pcs Relay, M with x8 inbuilt relays - 1pc Control M, for redundant CPU and for Serial communication - 10pcs Power boost M, for communication on distributed Backbone Bus - 1pc Buscon Gas, Internal communication module	1pc
2	5103001-00A Gas Detection Repeater panel with keypad and full color display	2pcs
3	**Sensor interface cabinets**	
	SIC-1A Sensor Interface Cabinet (175x250x150), Up to 4 Gas detectors	16pcs
	SIC-2A Sensor Interface Cabinet (175x250x150), Up to 8 Gas detectors	1pc
	SIC-1A-EXD Exd Sensor Interface Cabinet (335x310x205), Up to 4 Gas detectors	3pcs
	12223 + 12250 + 12222 M25 cable grand with enlargement adapter, between 13-18mm	40pcs
4	**Funnel Casing**	
	5200138-01A + 5200139-00A Salwico GD True IR (Optima Plus), II 2 G EEx d, 0-100% LEL CH4 with Ex junction box	9pcs
	5201033-00A 5K-200A Flange kit with Optima Plus	1pc
	5201063-00A Cable Gland M20 Ex d	9pcs
	28567_GDCAB1 Gas and detector cabinet, consisting of: - 3pcs Optima Plus IR detectors - 3pcs 2litre pumps - 3 sampling lines for CFW EXP TK VENT - 1pc internal gas detector XCD for internal gas leakage - 3pcs EX-d type flow switches	1pc
	28567_GDCAB2 Gas and detector cabinet, consisting of: - 2pcs Optima Plus IR detectors - 2pcs 2litre pumps - 2 sampling lines for CFW EXP TK VENT - 1pc internal gas detector XCD for internal gas leakage	1pc

- 2pcs EX-d type flow switches

Moisture separator for CFW EXP TK VENT sampling lines:

7316, Water-filter, 1/4", SUS316	1pcs
5201078-00A, F05G-2AN-MM1 Particle filter	4pcs
5201079-00A, F05C-2AN-DM0 Coalescing filter	4pcs
4258, Coupling, 1/4" – 10mm pipe, SUS316	10pcs
7243, Nippe 2501-1/4"	4pcs

5 **Accommodation space**

5200138-01A + 5200139-00A	7pcs
Salwico GD True IR (Optima Plus), II 2 G EEx d, 0-100% LEL CH4 with Ex junction box	
5201033-00A	3pcs
5K-200A Flange kit with Optima Plus	
5201037-00A	7pcs
Bracket for Salwico GD True IR	
5201063-00A	7pcs
Cable Gland M20 Ex d	

6 **DF Engines**

5200138-01A + 5200139-00A	23pcs
Salwico GD True IR (Optima Plus), II 2 G EEx d, 0-100% LEL CH4 with Ex junction box	
5201063-00A	23pcs
Cable Gland M20 Ex d	
5201033-00A	2pcs
5K-200A Flange kit with Optima Plus	

7 **REGAS PLANT AREA**

28567_GDCAB3	1 pc

Gas and detector cabinet, consisting of:
- 2pcs Optima Plus IR detectors
- 1pcs internal gas detector XCD for internal gas leakage
- 2pcs 2litre pumps
- 2pcs EX-d type flow switches

Moisture separator for CFW EXP TK VENT sampling lines:

7316, Water-filter, 1/4", SUS316	2pcs
4258, Coupling, 1/4" – 10mm pipe, SUS316	4pcs
5200138-01A + 5200139-00A	7pcs
Salwico GD True IR (Optima Plus), II 2 G EEx d, 0-100% LEL CH4 with Ex junction box	
5201063-00A	7pcs
Cable Gland M20 Ex d	
5201033-00A	2pcs
5K-200A Flange kit with Optima Plus	

DRAWING LIST

DIMENSION DRAWINGS SALWICO CARGO

PAGE	DESCRIPTION	REV
1	DRAWING LIST	–
2	CABINET DIMENSION DRAWING	–
3	LAYOUT DRAWING	–
4		–
5		–
6		–
7		–
8		–
9		–
10		–
11		–
12		–
13		–
14		–
15		–

PAGE	DESCRIPTION	REV
16		–
17		–
18		–
19		–
20		–
21		–
22		–
23		–
24		–
25		–
26		–
27		–
28		–
29		–
30		–

DRAWING LIST

Project: BW MARITIME
Project No: 28567GA

Consilium
Göteborg, Sweden
www.consilium.se
Copyright Consilium Marine AB

Size	Scale
A3–4	N/A
Design	Approved
YSN	WYL

Date: 10.04.13

SHI, H2074
DIMENSION DRAWING
GAS DETECTION SYSTEM
SALWICO GDS

Drawing no.	Rev.	Page
28567.GDS.02.01	–	1

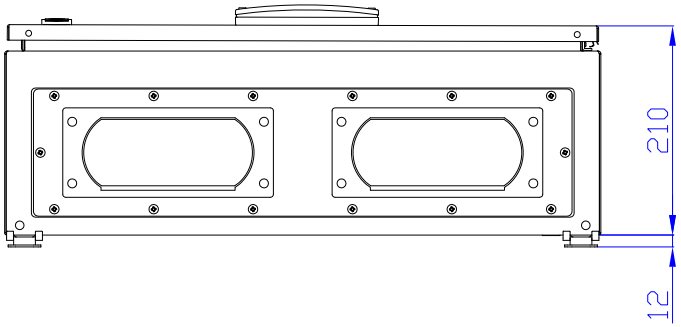

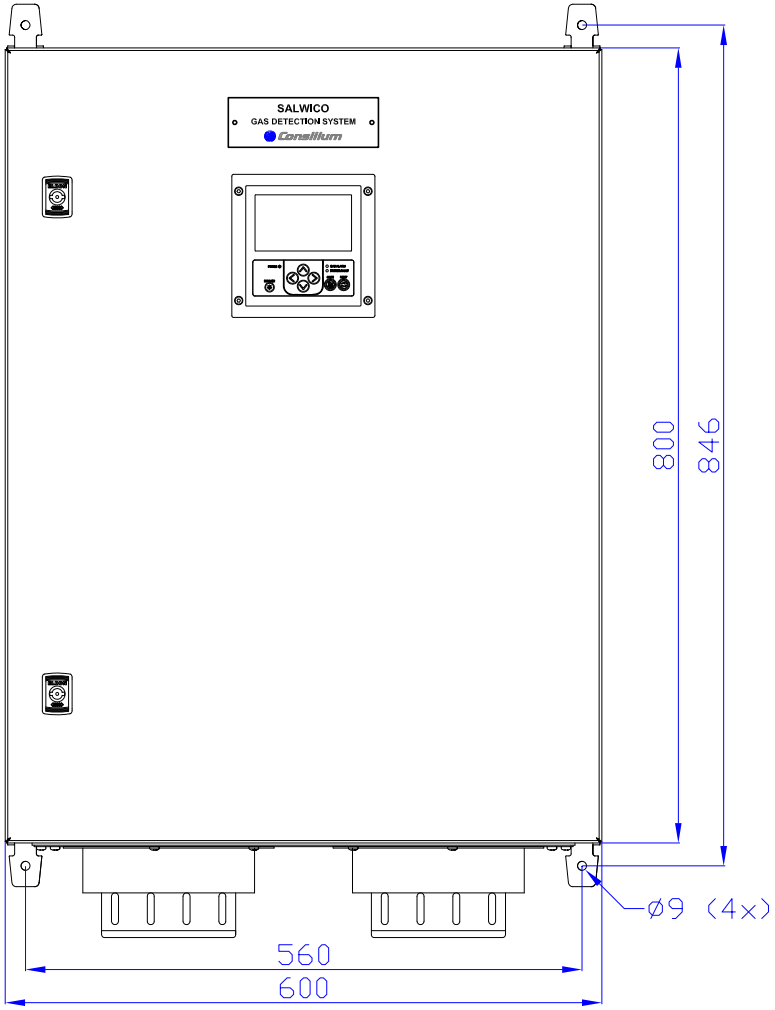

The cabinet should be mounted with the included wall mounting brackets.

2pcs of cable coaming are included.

Colour: MUNSELL 7.5 BG 7/2
Weight: Complete central ~25 kg

CABINET DIMENSION DRAWING

Project: BW MARITIME			SHI, H2074
Project No: 28567GA	Size A3-4	Scale N/A	DIMENSION DRAWING
Consilium Göteborg, Sweden www.consilium.se	Design YSN	Approved WYL	GAS DETECTION SYSTEM
Copyright Consilium Marine AB	Date: 10.04.13		SALWICO GDS
			Drawing no. 28567.GDS.02.01 — Rev. — Page 2

Rev.	Revision note	Date	Sign.
–			

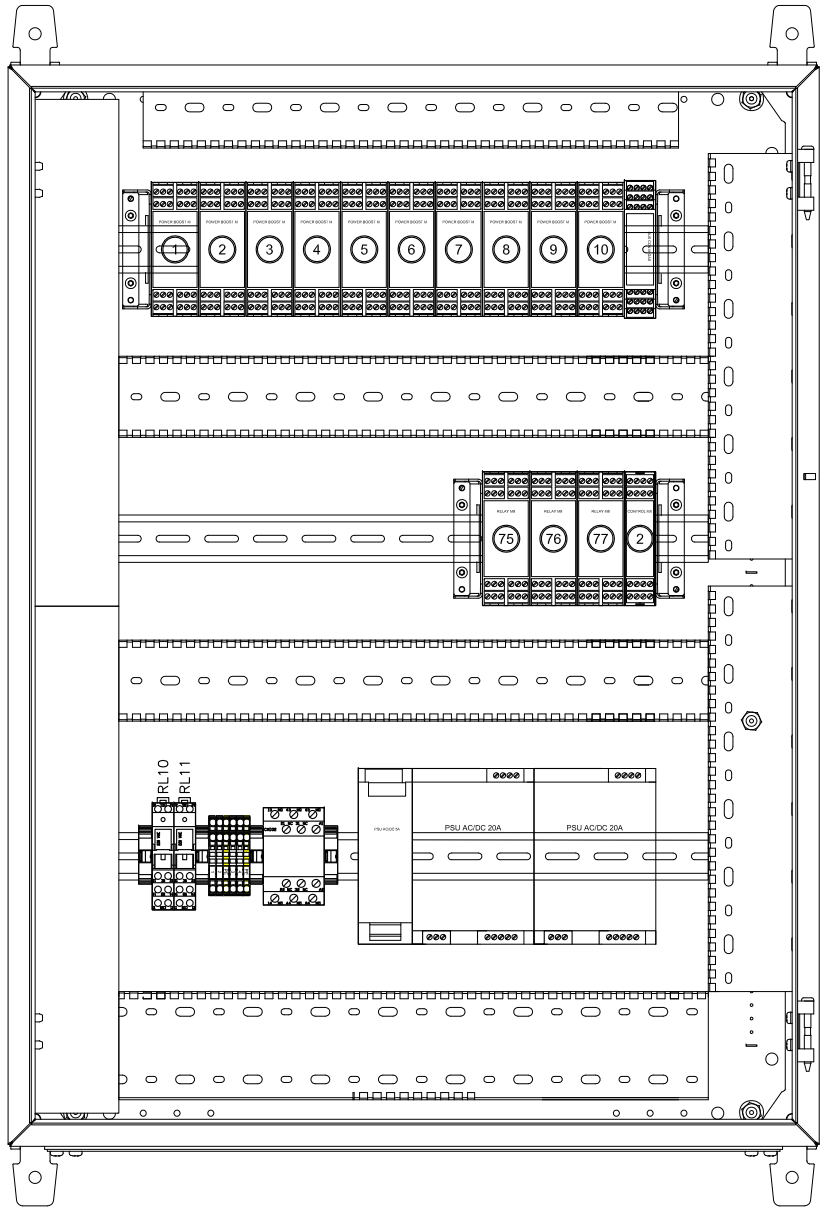

LAYOUT DRAWING

Project: BW MARITIME			SHI, H2074
Project No: 28567GA	Size A3–4	Scale N/A	DIMENSION DRAWING
Consilium Göteborg, Sweden www.consilium.se	Design YSN	Approved WYL	GAS DETECTION SYSTEM
Copyright Consilium Marine AB	Date: 10.04.13		SALWICO GDS
			Drawing no. 28567.GDS.02.01 — Rev. — Page 3

Rev.	Revision note	Date	Sign.

DRAWING LIST

CONNECTION DRAWING SALWICO GDS

PAGE	DESCRIPTION	Rev
1	DRAWING LIST	B
2	POWER SUPPLY CONNECTIONS	A
3	INTERNAL CONNECTIONS	–
4	EXTERNAL CONNECTIONS	B
5	POWER BOOST LOOP #1	–
6	POWER BOOST LOOP #2	–
7	POWER BOOST LOOP #3	–
8	POWER BOOST LOOP #4	–
9	POWER BOOST LOOP #5	A
10	POWER BOOST LOOP #6	–
11	POWER BOOST LOOP #7	–
12	POWER BOOST LOOP #8	–
13	POWER BOOST LOOP #9	–
14	POWER BOOST LOOP #10	–
15		–

PAGE	DESCRIPTION	Rev
16		–
17		–
18		–
19		–
20		–
21		–
22		–
23		–
24		–
25		–
26		–
27		–
28		–
29		–
30		–

DRAWING LIST

Project: BW MARITIME
Project No: 28567GA

Consilium
Göteborg, Sweden
www.consilium.se
Copyright Consilium Marine AB

Size A3–4 | Scale N/A
Design YSN | Approved WYL
Date: 10.04.13

SHI, H2074
CONNECTION DRAWING
GAS DETECTION SYSTEM
SALWICO GDS

Drawing no. 28567.GDS.03.01 | Ver. B | Page 1

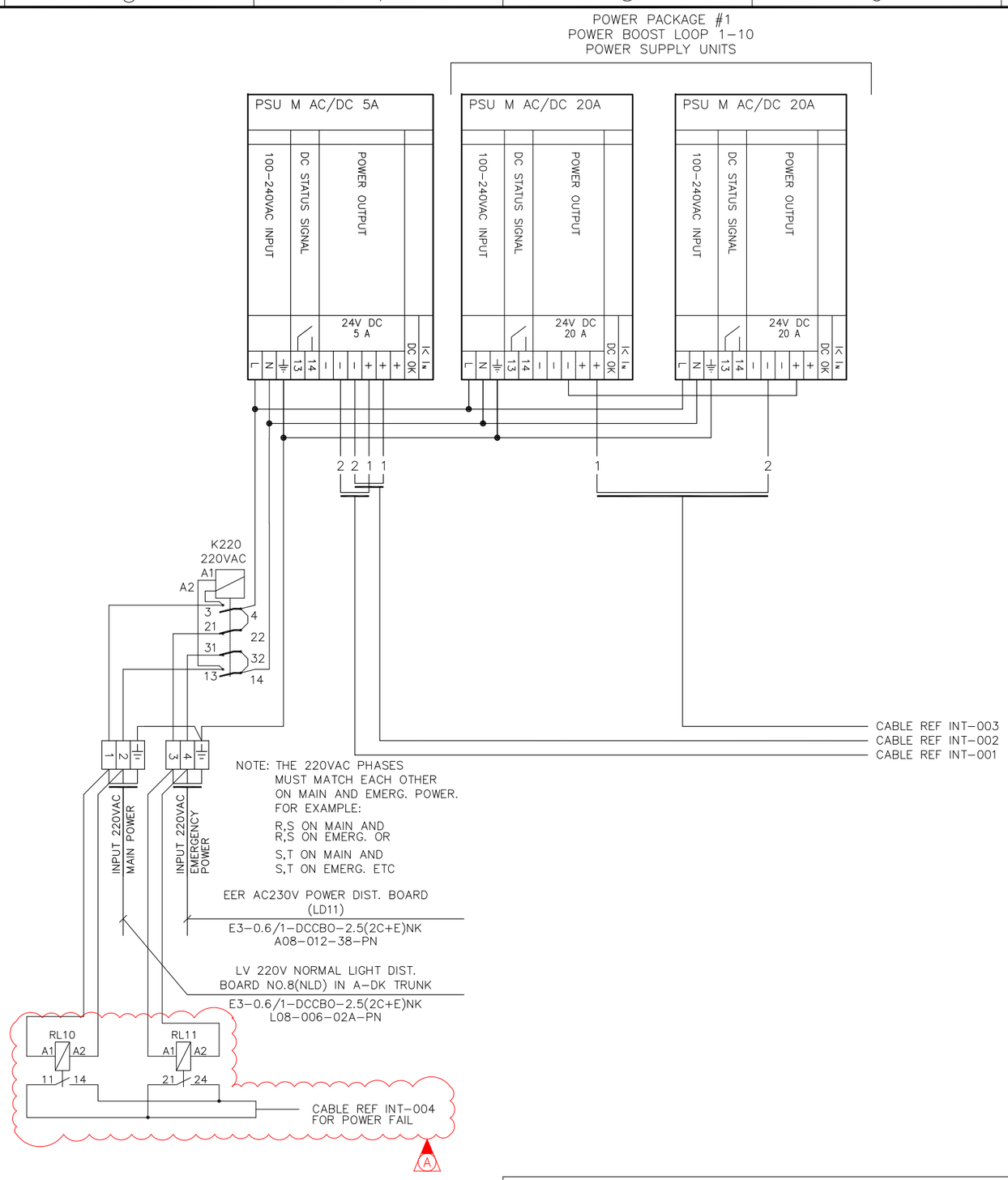

POWER SUPPLY CONNECTIONS

Project: BW MARITIME			SHI, H2074
Project No: 28567GA	Size A3–4	Scale N/A	CONNECTION DRAWING
Consilium Göteborg, Sweden www.consilium.se	Design YSN	Approved WYL	GAS DETECTION SYSTEM
			SALWICO GDS
	Date: 10.04.13		Drawing no. 28567.GDS.03.01 · Ver. A · Page 2

Copyright Consilium Marine AB

Rev.	Revision note	Date	Sign.
A	ADDED POWER FAIL CONNECTION	150121	YSN

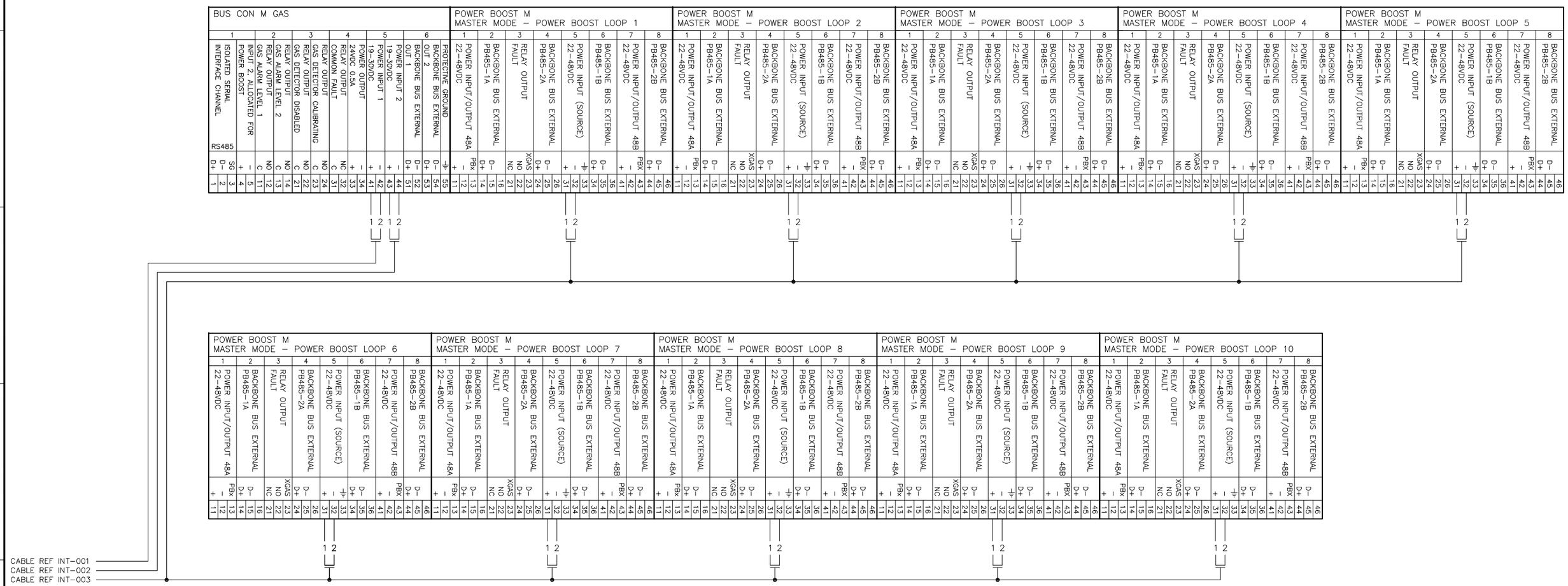

INTERNAL CONNECTIONS

Project: BW MARITIME			
Project No: 28567GA	Size A3–4	Scale N/A	SHI, H2074 CONNECTION DRAWING GAS DETECTION SYSTEM SALWICO GDS
Consilium Göteborg, Sweden www.consilium.se Copyright Consilium Marine AB	Design YSN	Approved WYL	
	Date: 10.04.13		Drawing no. 28567.GDS.03.01 · Ver. – · Page 3

Rev.	Revision note	Date	Sign.
–			

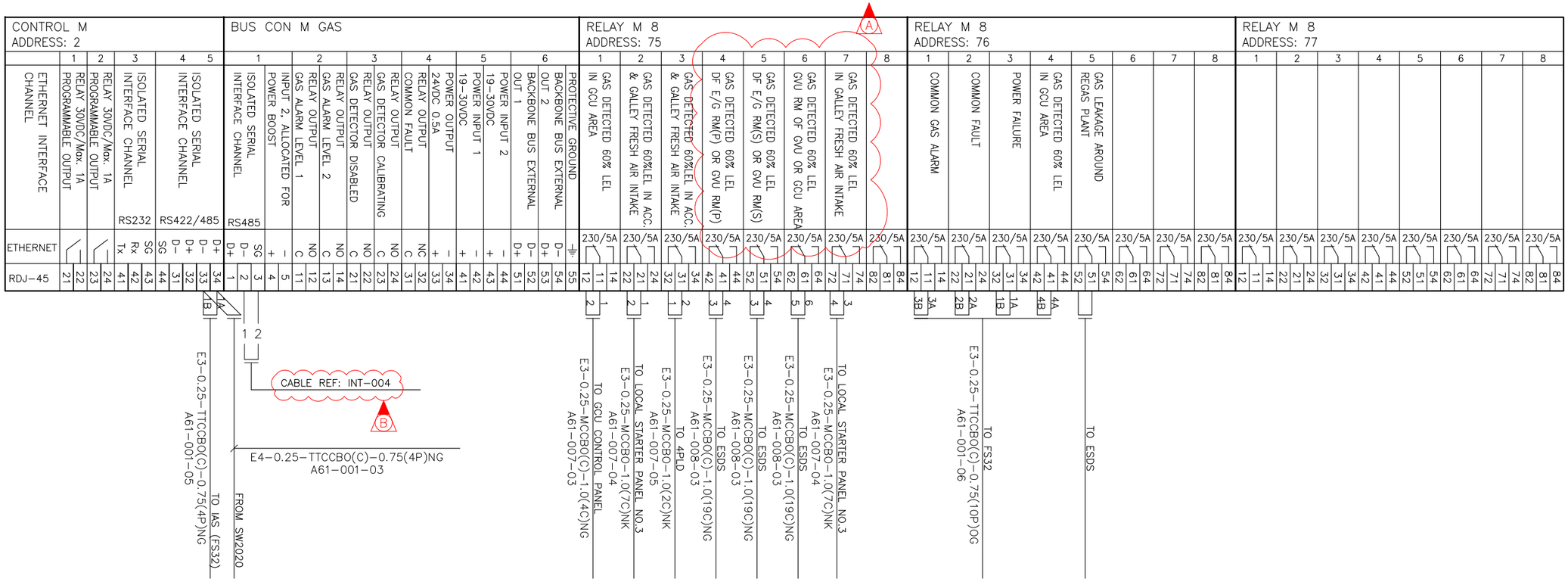

EXTERNAL CONNECTIONS

Rev.	Revision note	Date	Sign.
B	ADDED POWER FAIL CONNECTION	150121	YSN
A	REVISED ACC. TO YARD COMMENT	130818	YSN

Project: BW MARITIME
Project No: 28567GA

Consilium
Göteborg, Sweden
www.consilium.se
Copyright Consilium Marine AB

Size	Scale
A3-4	N/A
Design	Approved
YSN	WYL
Date: 10.04.13	

SHI, H2074
CONNECTION DRAWING
GAS DETECTION SYSTEM
SALWICO GDS

Drawing no.	Ver.	Page
28567.GDS.03.01	B	4

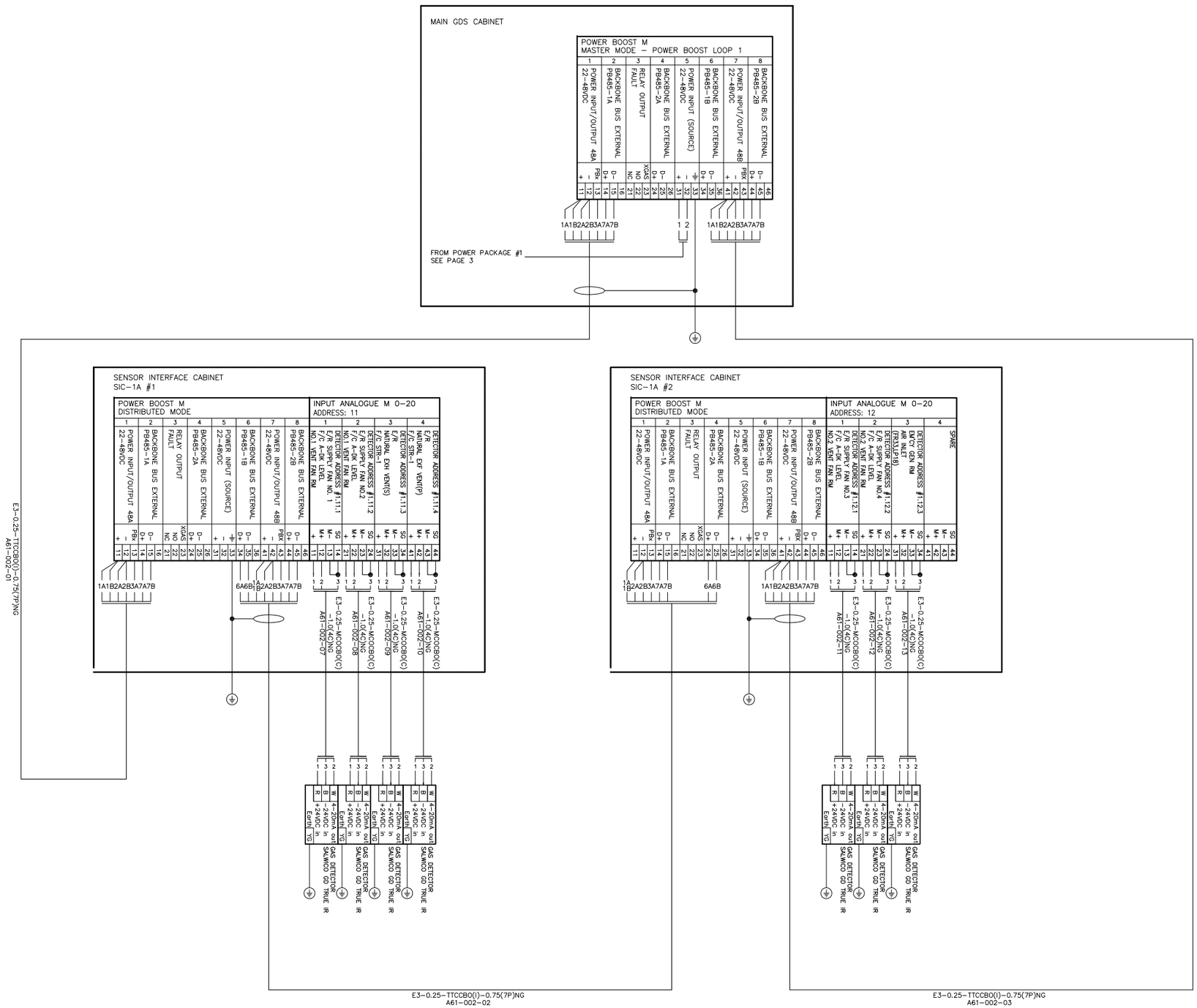

POWER BOOST LOOP #1

Project: BW MARITIME			SHI, H2074
Project No: 28567GA	Size A3-4	Scale N/A	CONNECTION DRAWING
Consilium	Design YSN	Approved WYL	GAS DETECTION SYSTEM
Göteborg, Sweden			SALWICO GDS
www.consilium.se	Date: 10.04.13	Drawing no. 28567.GDS.03.01	Ver. – / Page 5

Copyright Consilium Marine AB

Rev.	Revision note	Date	Sign.
–			

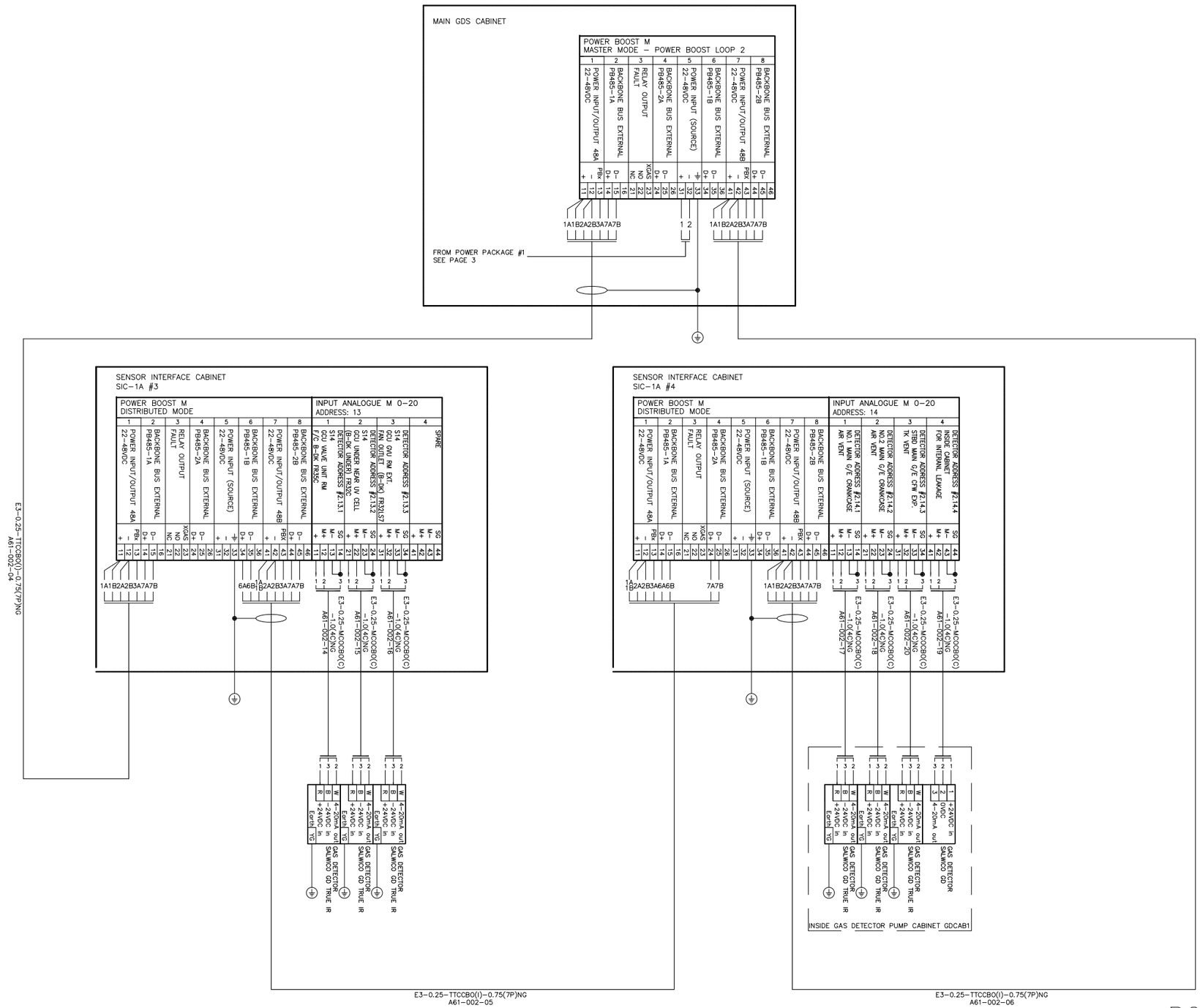

POWER BOOST LOOP #2

Project: BW MARITIME			SHI, H2074
Project No: 28567GA	Size A3-4	Scale N/A	CONNECTION DRAWING
Consilium	Design YSN	Approved WYL	GAS DETECTION SYSTEM
Göteborg, Sweden			SALWICO GDS
www.consilium.se	Date: 10.04.13		Drawing no. 28567.GDS.03.01 / Ver. – / Page 6

Copyright Consilium Marine AB

Rev.	Revision note	Date	Sign.
–			

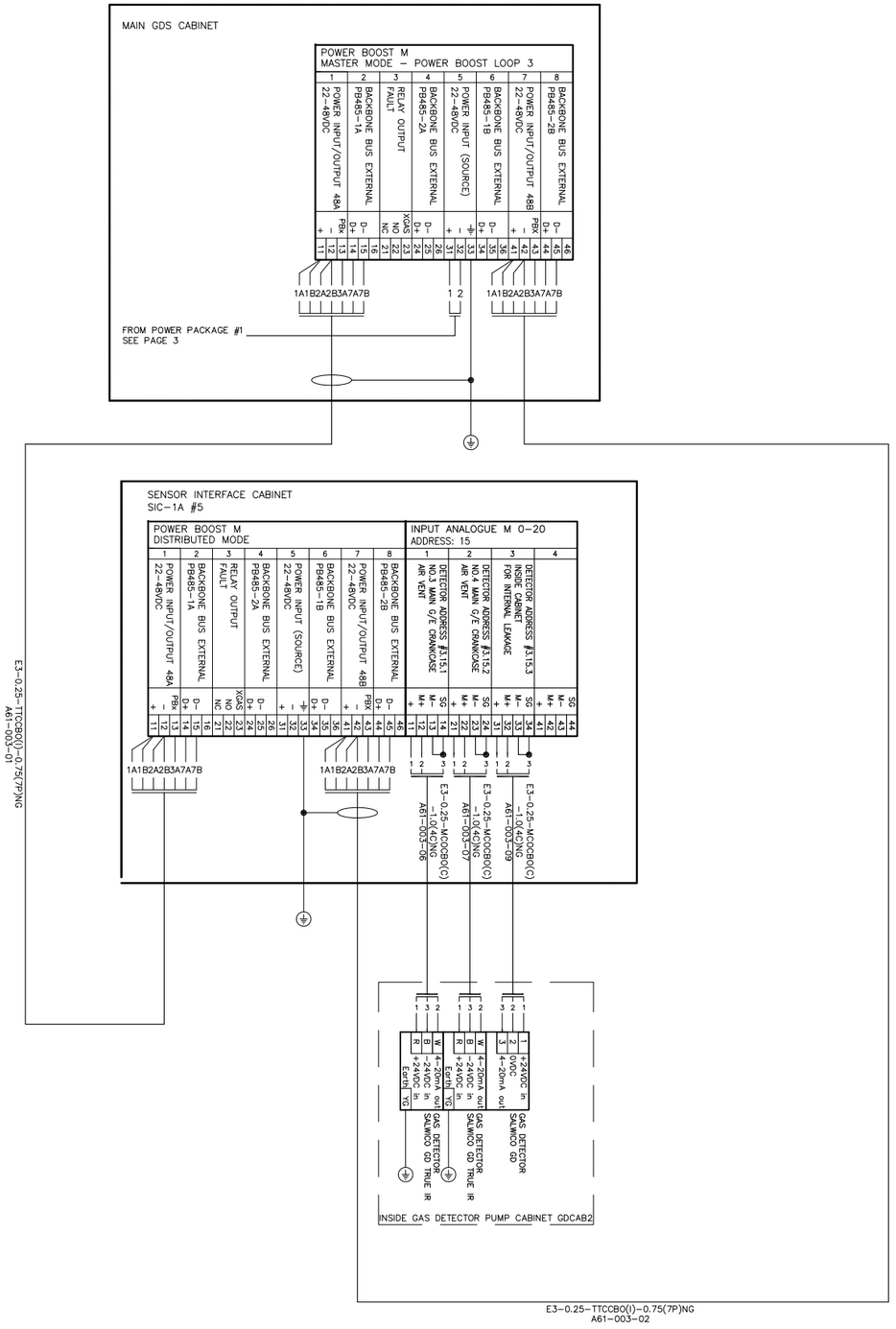

POWER BOOST LOOP #3

Project: BW MARITIME	SHI, H2074
Project No: 28567GA	CONNECTION DRAWING
Size A3–4 / Scale N/A	GAS DETECTION SYSTEM
Design YSN / Approved WYL	SALWICO GDS
Date: 10.04.13	Drawing no. 28567.GDS.03.01 / Ver. – / Page 7

Consilium
Göteborg, Sweden
www.consilium.se
Copyright Consilium Marine AB

Rev.	Revision note	Date	Sign.
–			

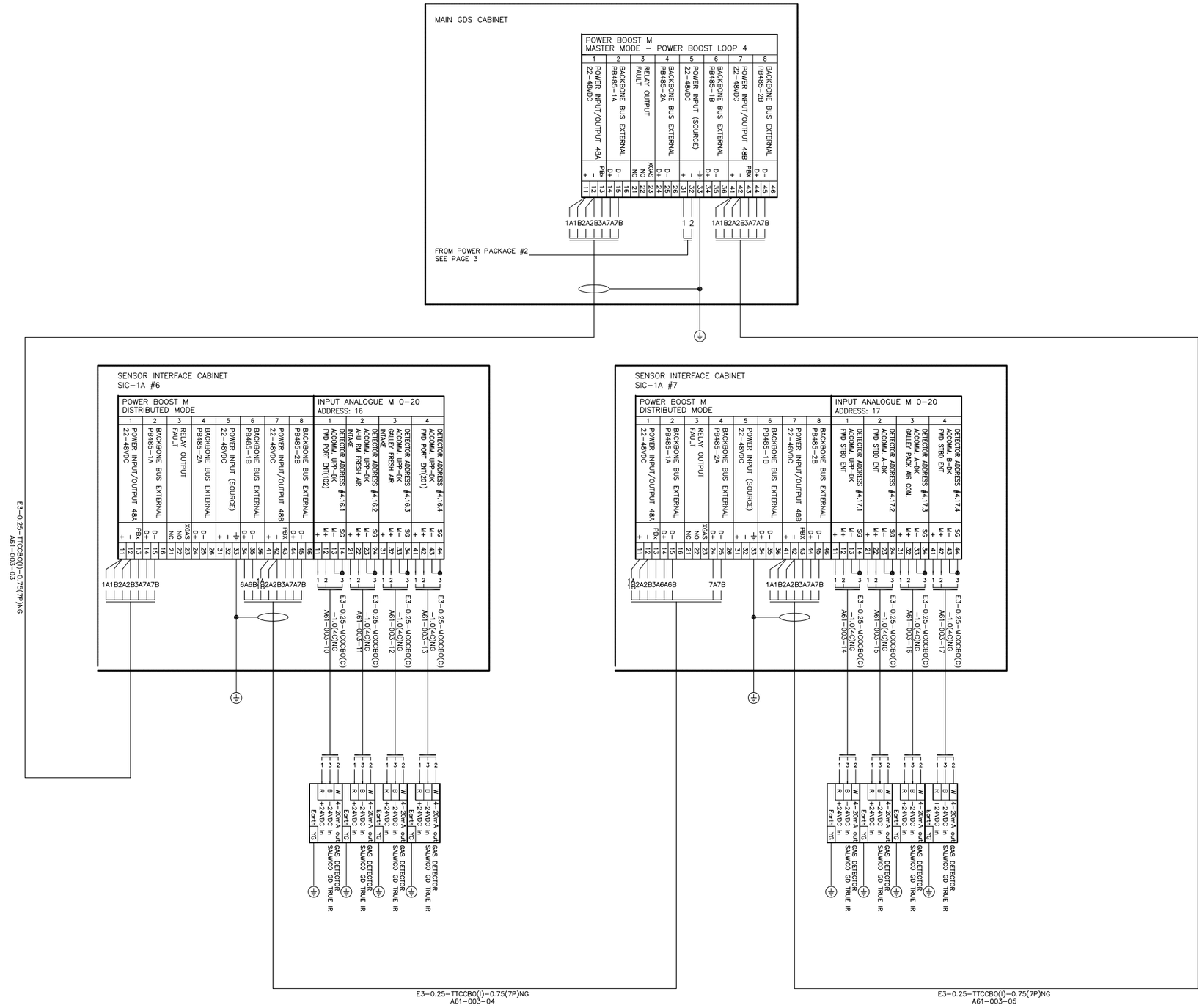

POWER BOOST LOOP #4

Project: BW MARITIME	SHI, H2074
Project No: 28567GA	CONNECTION DRAWING
Size A3–4 / Scale N/A	GAS DETECTION SYSTEM
Design YSN / Approved WYL	SALWICO GDS
Date: 10.04.13	Drawing no. 28567.GDS.03.01 / Ver. – / Page 8

Consilium
Göteborg, Sweden
www.consilium.se
Copyright Consilium Marine AB

Rev.	Revision note	Date	Sign.
–			

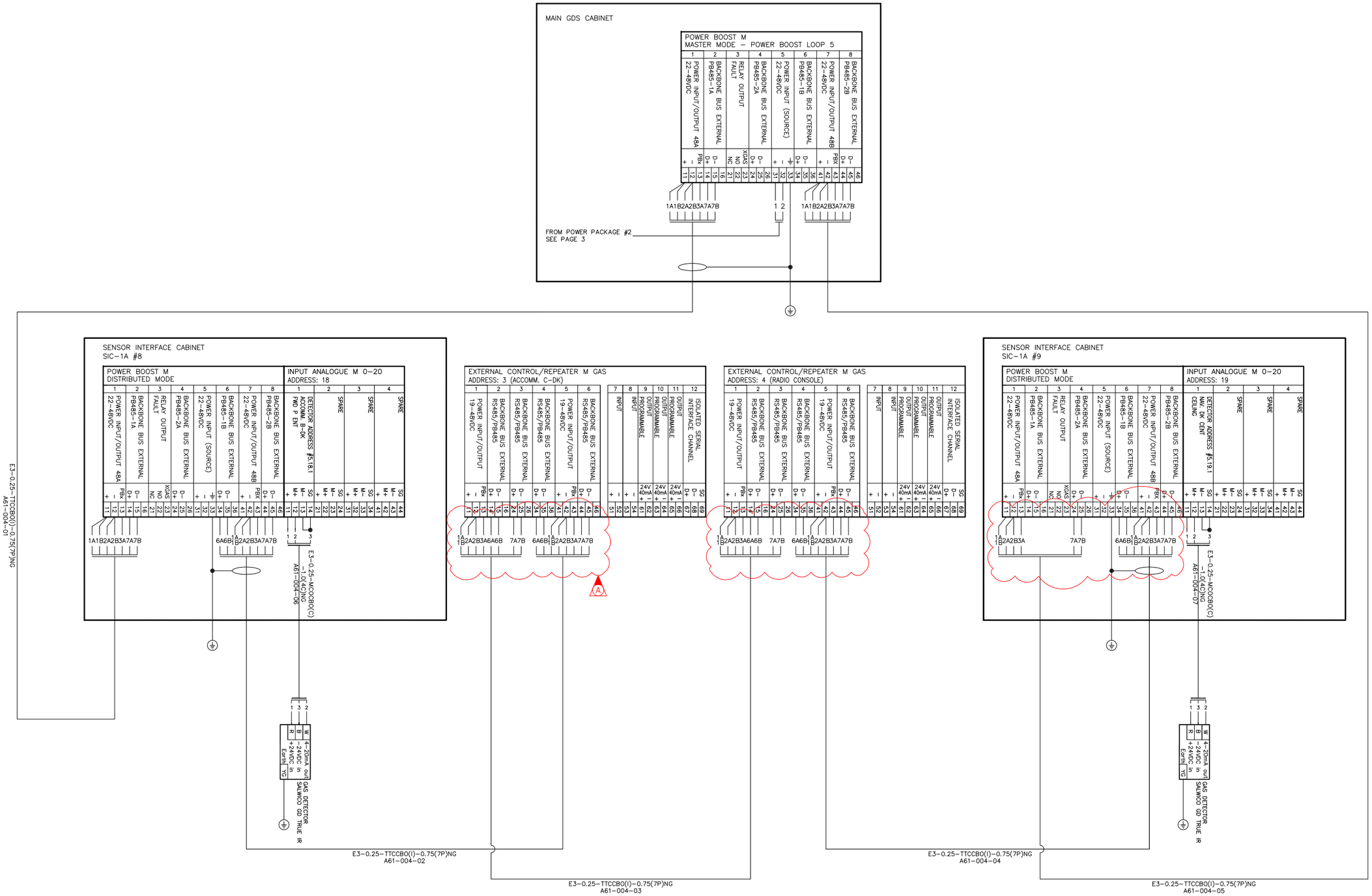

POWER BOOST LOOP #5

Project: BW MARITIME			SHI, H2074
Project No: 28567GA	Size A3-4	Scale N/A	CONNECTION DRAWING
Consilium	Design YSN	Approved WYL	GAS DETECTION SYSTEM
Göteborg, Sweden			SALWICO GDS
www.consilium.se	Date: 10.04.13	Drawing no. 28567.GDS.03.01	Ver. A / Page 9

Copyright Consilium Marine AB

Rev.	Revision note	Date	Sign.
A	REVISED CONNECTION BETWEEN PANELS	130818	YSN

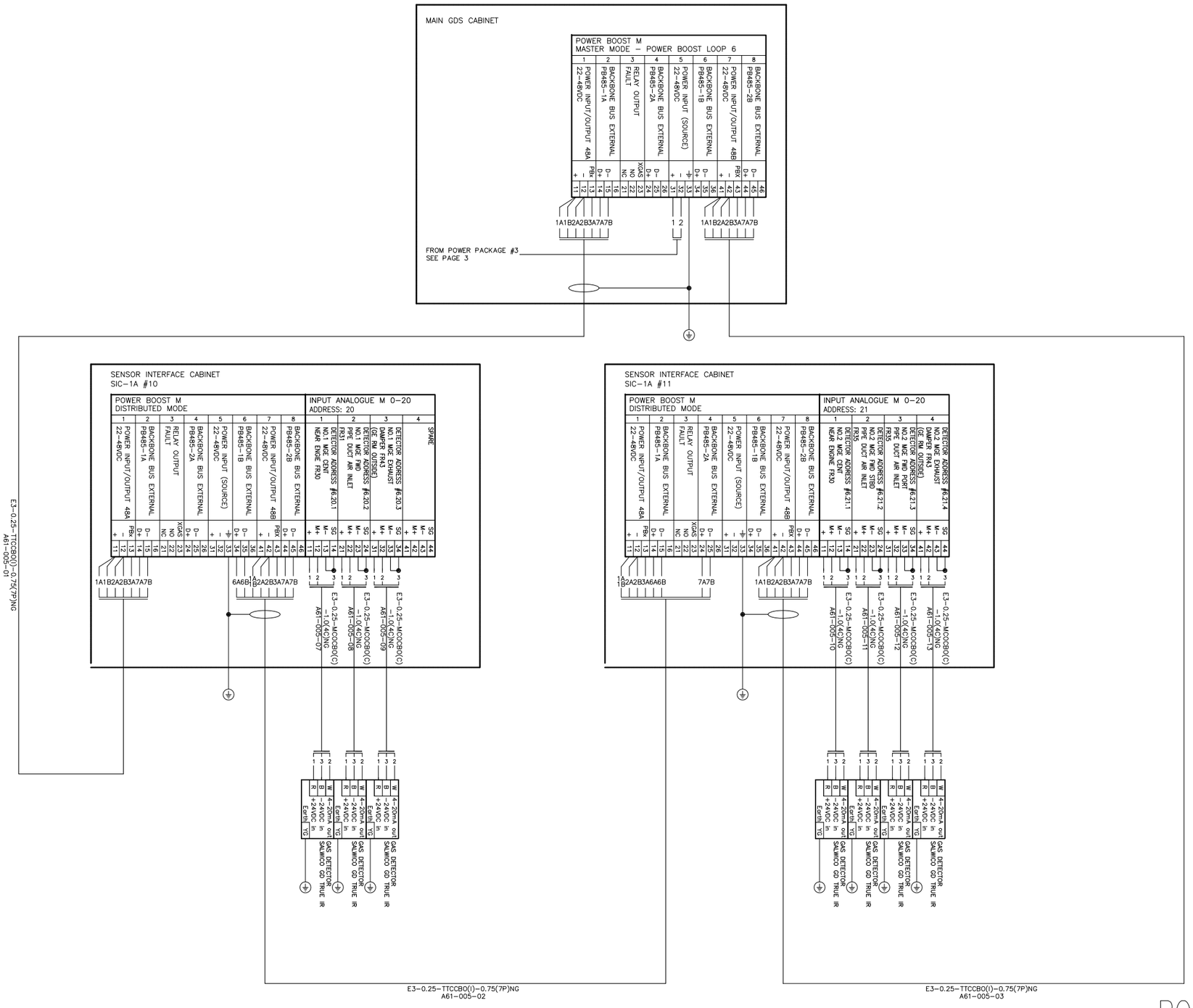

POWER BOOST LOOP #6

Project: BW MARITIME	SHI, H2074
Project No: 28567GA	CONNECTION DRAWING
Size A3–4 / Scale N/A	GAS DETECTION SYSTEM
Design YSN / Approved WYL	SALWICO GDS
Date: 10.04.13	Drawing no. 28567.GDS.03.01 / Ver. – / Page 10

Consilium
Göteborg, Sweden
www.consilium.se
Copyright Consilium Marine AB

Rev.	Revision note	Date	Sign.
–			

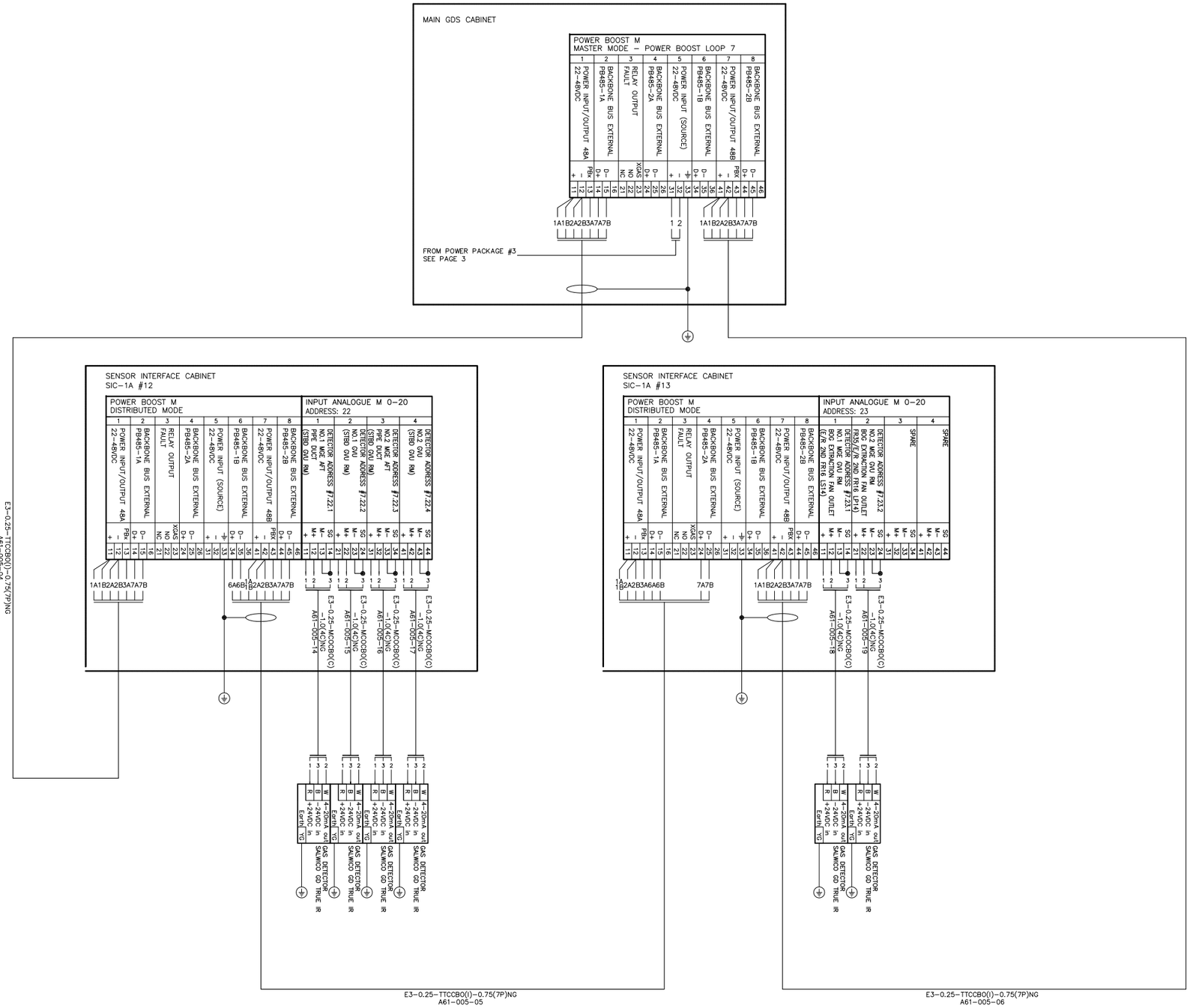

POWER BOOST LOOP #7

Project: BW MARITIME			SHI, H2074
Project No: 28567GA	Size A3–4	Scale N/A	CONNECTION DRAWING
Consilium	Design YSN	Approved WYL	GAS DETECTION SYSTEM
Göteborg, Sweden			SALWICO GDS
www.consilium.se	Date: 10.04.13	Drawing no. 28567.GDS.03.01	Ver. – / Page 11

Copyright Consilium Marine AB

Rev.	Revision note	Date	Sign.
–			

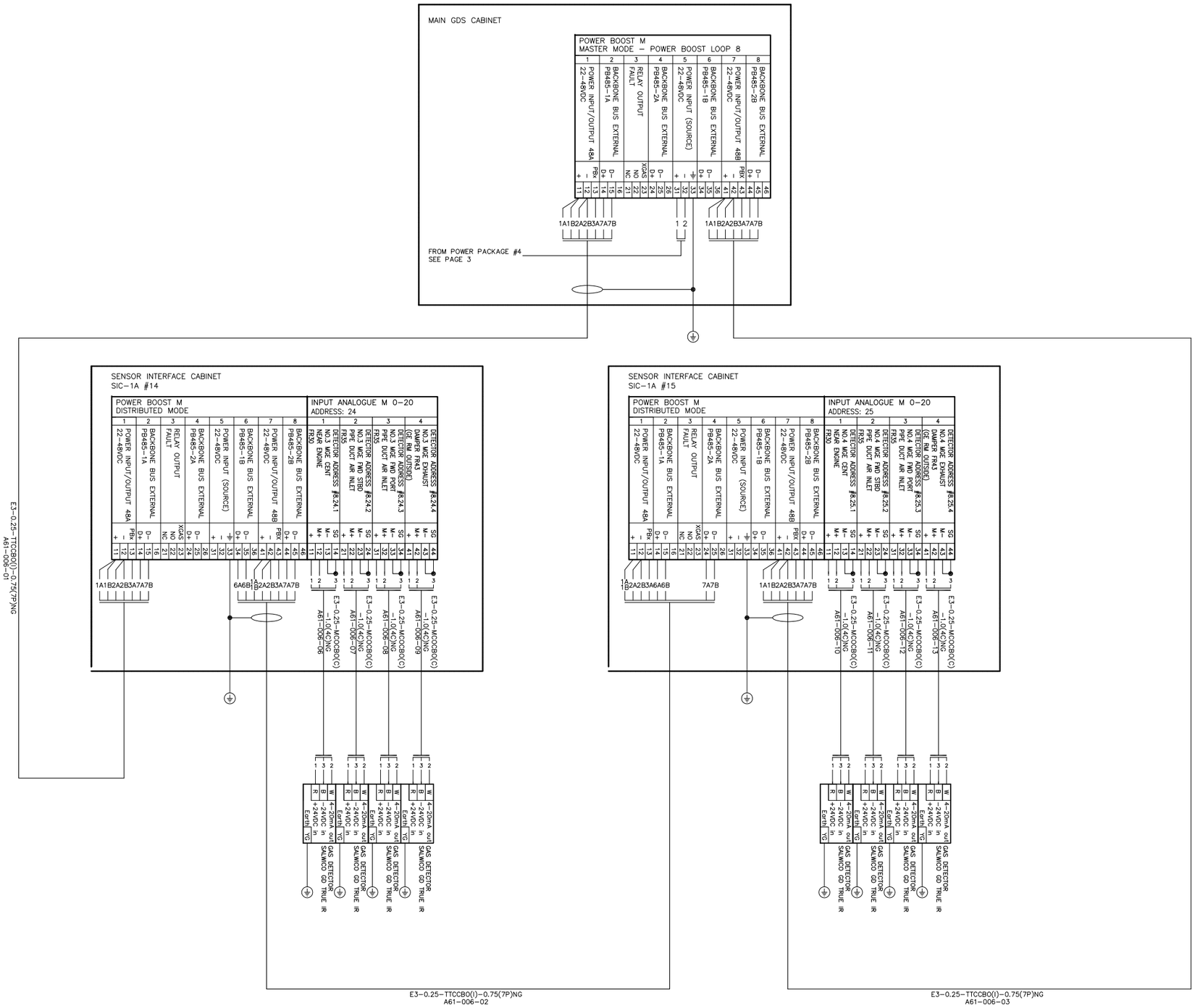

POWER BOOST LOOP #8

Project: BW MARITIME	SHI, H2074
Project No: 28567GA	CONNECTION DRAWING
Size A3–4 / Scale N/A	GAS DETECTION SYSTEM
Design YSN / Approved WYL	SALWICO GDS
Date: 10.04.13	Drawing no. 28567.GDS.03.01 / Ver. – / Page 12

Consilium
Göteborg, Sweden
www.consilium.se
Copyright Consilium Marine AB

Rev.	Revision note	Date	Sign.
–			

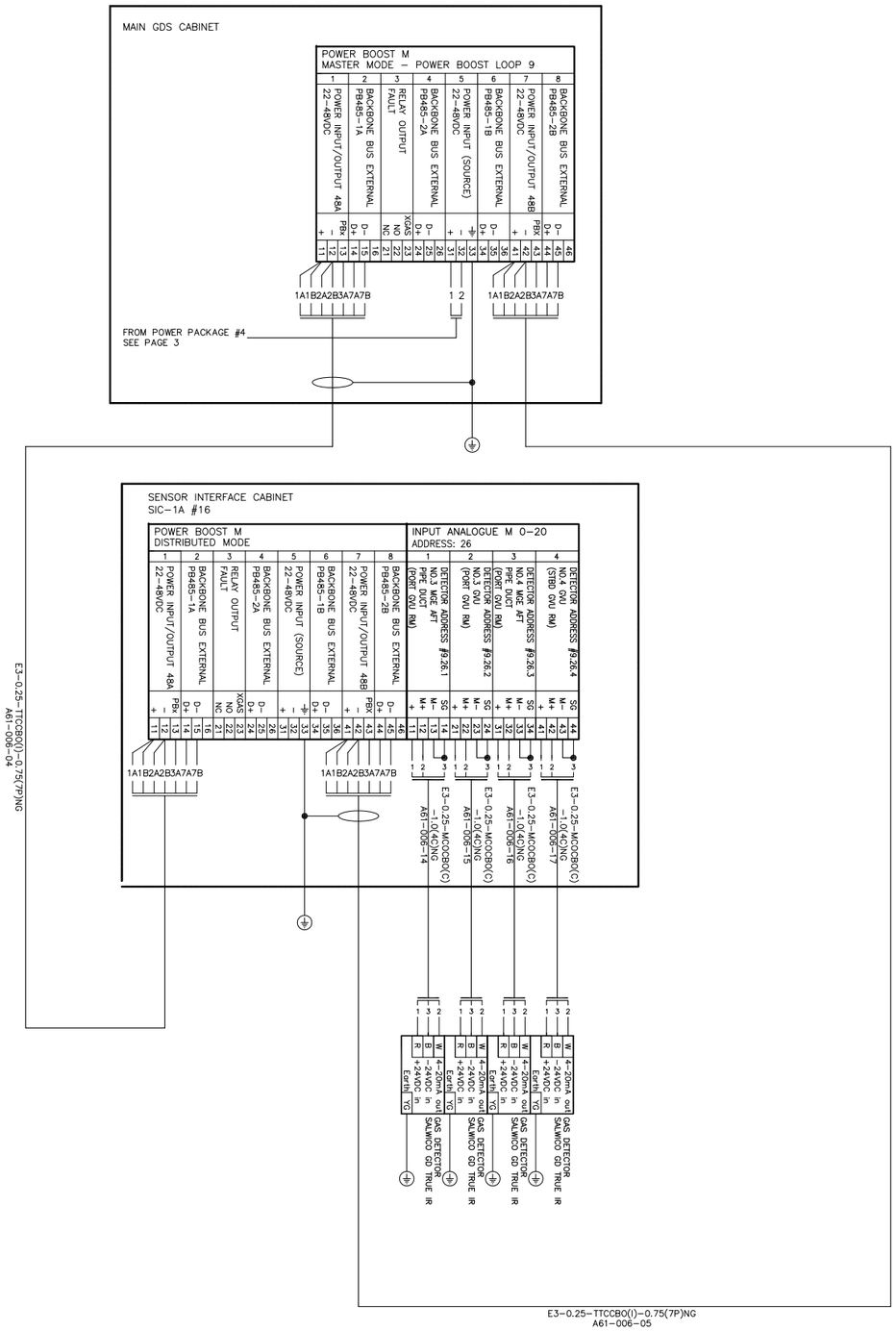

POWER BOOST LOOP #9

Project: BW MARITIME			SHI, H2074
Project No: 28567GA	Size A3–4	Scale N/A	CONNECTION DRAWING
Consilium Göteborg, Sweden www.consilium.se	Design YSN	Approved WYL	GAS DETECTION SYSTEM SALWICO GDS
Copyright Consilium Marine AB	Date: 10.04.13		Drawing no. 28567.GDS.03.01 · Ver. – · Page 13

Rev.	Revision note	Date	Sign.
–			

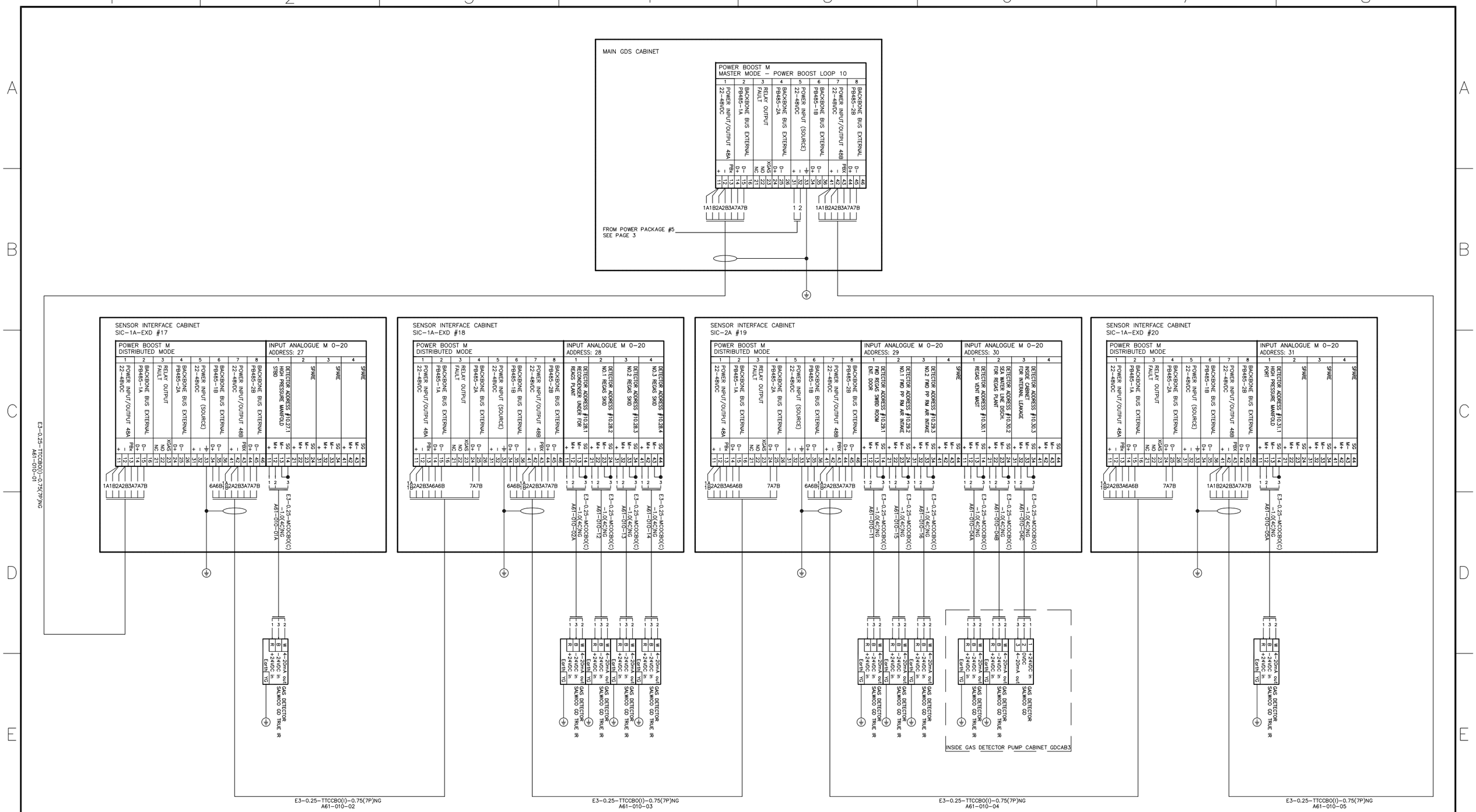

POWER BOOST LOOP #10

Project: BW MARITIME	SHI, H2074
Project No: 28567GA	CONNECTION DRAWING
Consilium Göteborg, Sweden www.consilium.se	GAS DETECTION SYSTEM
Copyright Consilium Marine AB	SALWICO GDS
Size A3-4 / Scale N/A	
Design YSN / Approved WYL	
Date: 10.04.13	Drawing no. 28567.GDS.03.01 / Ver. – / Page 14

Rev.	Revision note	Date	Sign.
–			

DRAWING LIST

DIMENSION DRAWING SALWICO PUMP & DETECTOR CABINET GDCAB

PAGE	DESCRIPTION	REV
1	DRAWING LIST	–
2	CABINET DIMENSION DRAWING	–
3	LAYOUT DRAWING–GDCAB1	–
4	LAYOUT DRAWING–GDCAB2	–
5	LAYOUT DRAWING–GDCAB3	–
6		–
7		–
8		–
9		–
10		–
11		–
12		–
13		–
14		–
15		–

PAGE	DESCRIPTION	Rev
16		–
17		–
18		–
19		–
20		–
21		–
22		–
23		–
24		–
25		–
26		–
27		–
28		–
29		–
30		–

DRAWING LIST

Project: BW MARITIME			SHI, H2074
Project No: 28567GA	Size A3–4	Scale N/A	DIMENSION DRAWING
Consilium	Design YSN	Approved WYL	GAS DETECTION SYSTEM
Göteborg, Sweden			SALWICO GDS
www.consilium.se	–		Drawing no. 28567.GDS.02.02 / Ver. – / Page 1
Copyright Consilium Marine AB	Date: 10.04.13		

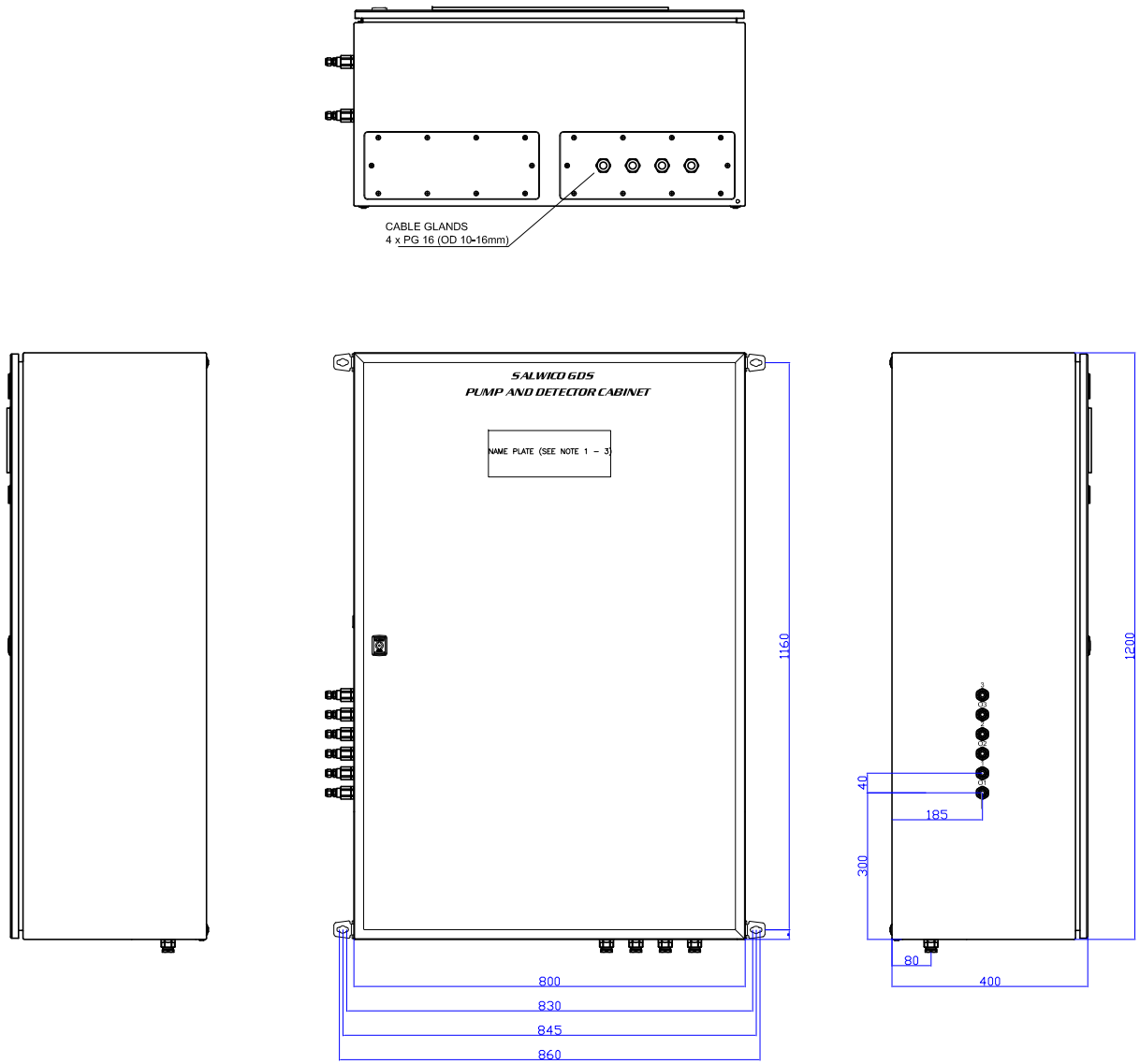

CONN. ON LEFT SIDE OF CABINET

01,02,03: MEASURING GAS OUTLET
FLAME TRAPS MOUNTED
INSIDE THE CABINET.
PIPE OUT. DIA. 12 mm

SP1: MEASURING GAS SAMPLING POINTS
FLAME TRAP CONNECTION
PIPE OUT. DIA. 10 mm
CABINET NO. 1 : 3 POINTS
CABINET NO. 2 & 3 : 2 POINTS

REMARKS: TWO OR THREE PUMP SYSTEM
INCLUDED IN THE SYSTEM:
TWO OR THREE OPTIMA PLUS
IR DETECTOR
ONE XCD-CC DETECTOR

NOTE:
AUTOMATIC SHUTDOWN OF SYSTEM AT
60% LEL HC INSIDE CABINET

CABINET COLOUR: Munsell 7.5BG 7/2

NOTE 1: NAME PLATE FOR CABINET NO.1 PB LOOP 2

GAS DETECTORS FOR
- NO.1 MGE CRANKCASE AIR VENT
-NO.2 MGE CRANKCASE AIRVENT
- STBD MAIN G/E CFW EXP. TK VENT

NOTE 2: NAME PLATE FOR CABINET NO.2 PB LOOP 3

GAS DETECTORS FOR
- NO.3 MGE CRANKCASE AIR VENT
- NO.4 MGE CRANKCASE AIR VENT

NOTE 3: NAME PLATE FOR CABINET NO.3 PB LOOP 10

GAS DETECTORS FOR
- REGAS VENT MAST
-SEA WATER LINE DISCH. FOR

CABINET DIMENSION DRAWING-GDCAB1~3

Rev.	Revision note	Date	Sign.
–			

Project: BW MARITIME
Project No: 28567GA

Consilium
Göteborg, Sweden
www.consilium.se
Copyright Consilium Marine AB

Size	Scale
A3-4	N/A
Design	Approved
YSN	WYL
–	
Date: 10.04.13	

SHI, H2074
DIMENSION DRAWING
GAS DETECTION SYSTEM
SALWICO GDS

Drawing no.	Ver.	Page
28567.GDS.02.02	–	2

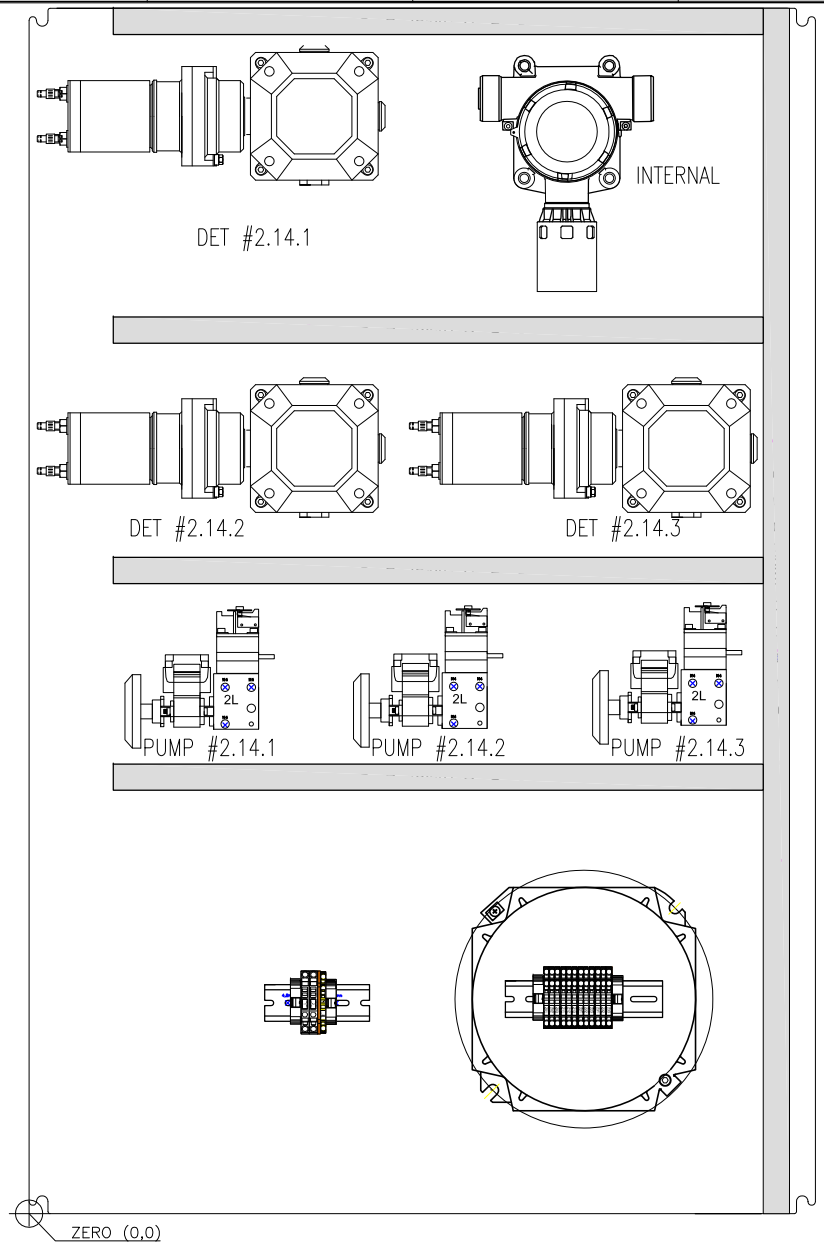

LAYOUT DRAWING–GDCAB1

Project: BW MARITIME			SHI, H2074
Project No: 28567GA	Size A3–4	Scale N/A	DIMENSION DRAWING
Consilium	Design YSN	Approved WYL	GAS DETECTION SYSTEM
Göteborg, Sweden			SALWICO GDS
www.consilium.se	—		Drawing no. 28567.GDS.02.02
Copyright Consilium Marine AB	Date: 10.04.13		Ver. — Page 3

Rev.	Revision note	Date	Sign.
—			

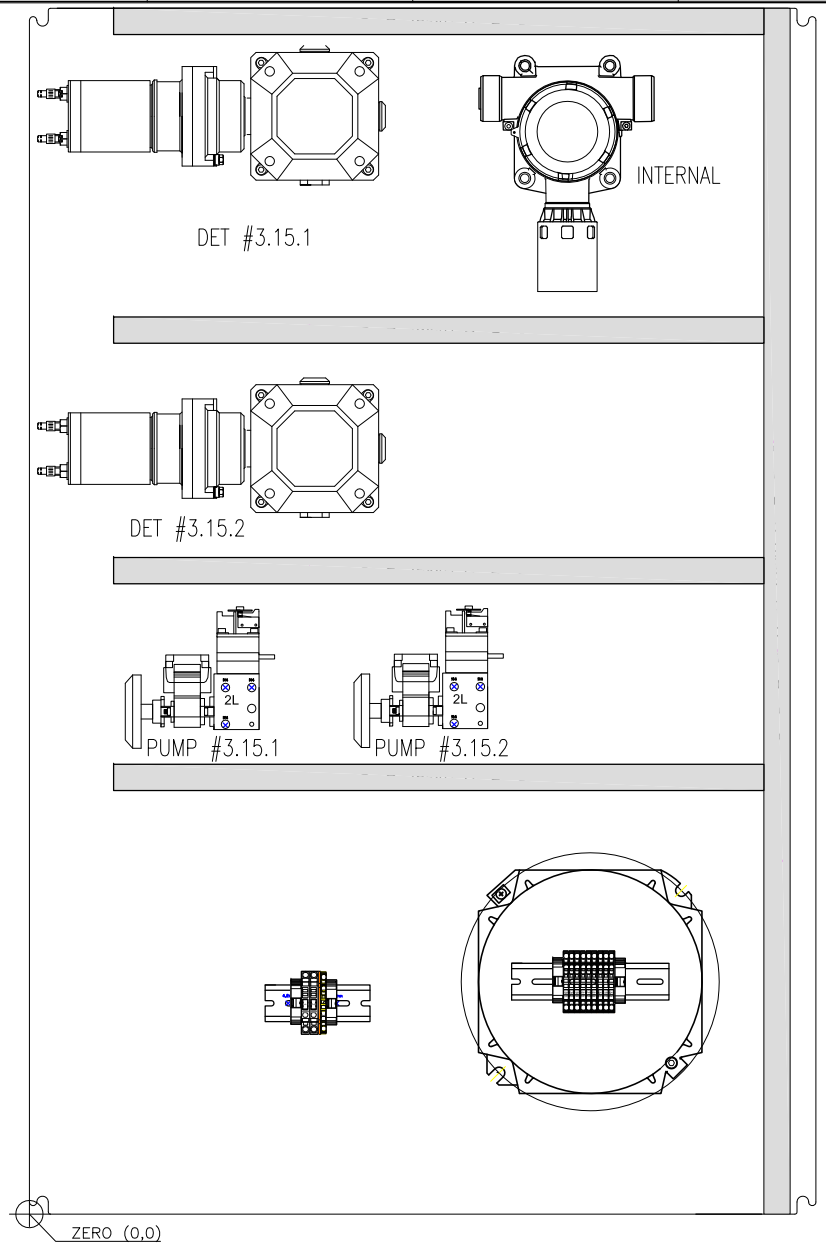

LAYOUT DRAWING–GDCAB2

Project: BW MARITIME			SHI, H2074
Project No: 28567GA	Size A3–4	Scale N/A	DIMENSION DRAWING
Consilium	Design YSN	Approved WYL	GAS DETECTION SYSTEM
Göteborg, Sweden			SALWICO GDS
www.consilium.se	—		Drawing no. 28567.GDS.02.02
Copyright Consilium Marine AB	Date: 10.04.13		Ver. — Page 4

Rev.	Revision note	Date	Sign.
—			

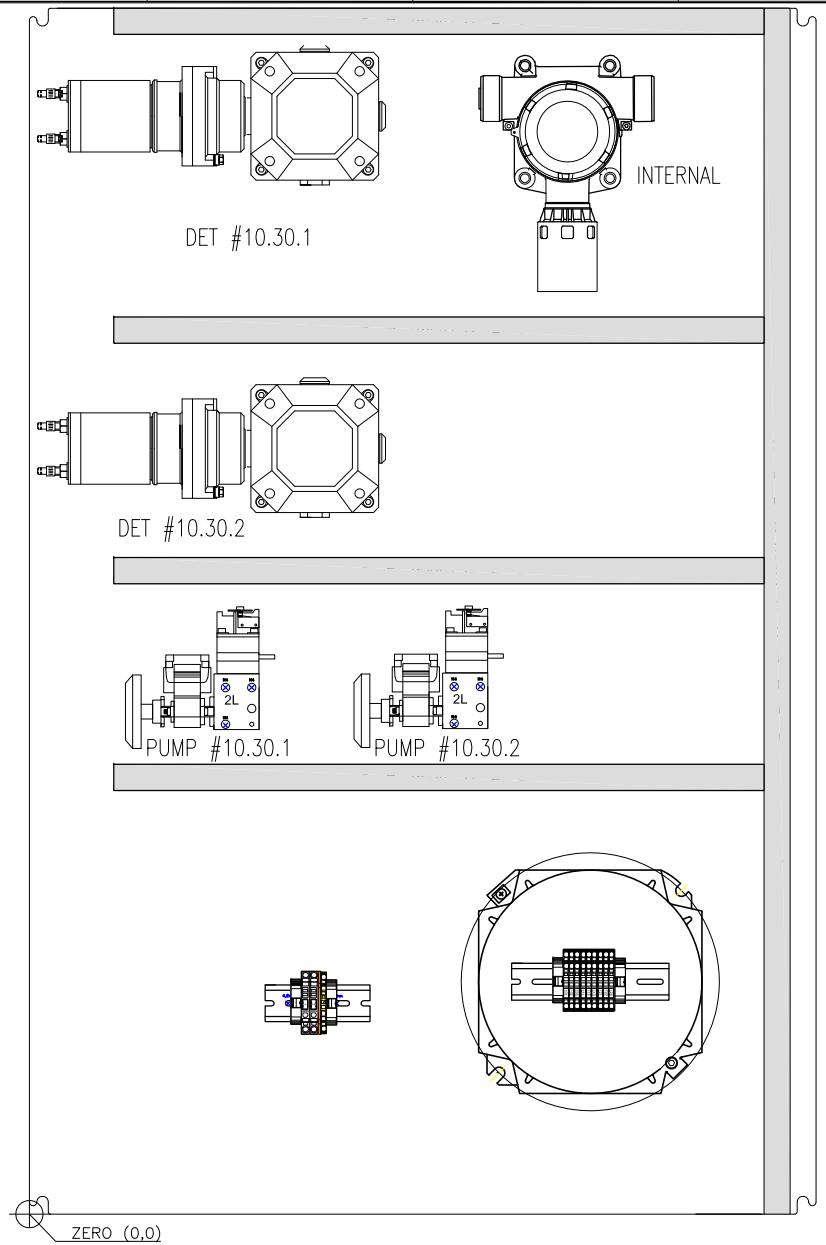

LAYOUT DRAWING–GDCAB3

Project: BW MARITIME			SHI, H2074
Project No: 28567GA	Size A3–4	Scale N/A	DIMENSION DRAWING
Consilium	Design YSN	Approved WYL	GAS DETECTION SYSTEM
Göteborg, Sweden			SALWICO GDS
www.consilium.se	—		Drawing no. 28567.GDS.02.02
Copyright Consilium Marine AB	Date: 10.04.13		Ver. — Page 5

Rev.	Revision note	Date	Sign.
—			

DRAWING LIST

CONNECTION DRAWING SALWICO PUMP & DETECTOR CABINET GDCAB

PAGE	DESCRIPTION	Rev
1	DRAWING LIST	–
2	INTERNAL ELECTRICAL CONNECTION GDCAB1	–
3	DIAGRAM/FLOW CHART–GDCAB1	–
4	INTERNAL ELECTRICAL CONNECTION GDCAB2	–
5	DIAGRAM/FLOW CHART–GDCAB2	–
6	INTERNAL ELECTRICAL CONNECTION GDCAB3	–
7	DIAGRAM/FLOW CHART–GDCAB3	–
8		–
9		–
10		–
11		–
12		–
13		–
14		–
15		–

PAGE	DESCRIPTION	Rev
16		–
17		–
18		–
19		–
20		–
21		–
22		–
23		–
24		–
25		–
26		–
27		–
28		–
29		–
30		–

DRAWING LIST

Project: BW MARITIME
Project No: 28567GA

Consilium
Göteborg, Sweden
www.consilium.se
Copyright Consilium Marine AB

Size A3–4 | Scale N/A
Design YSN | Approved WYL
–
Date: 10.04.13

SHI, H2074
CONNECTION DRAWING
GAS DETECTION SYSTEM
SALWICO GDS

Drawing no. 28567.GDS.03.02 | Ver. – | Page 1

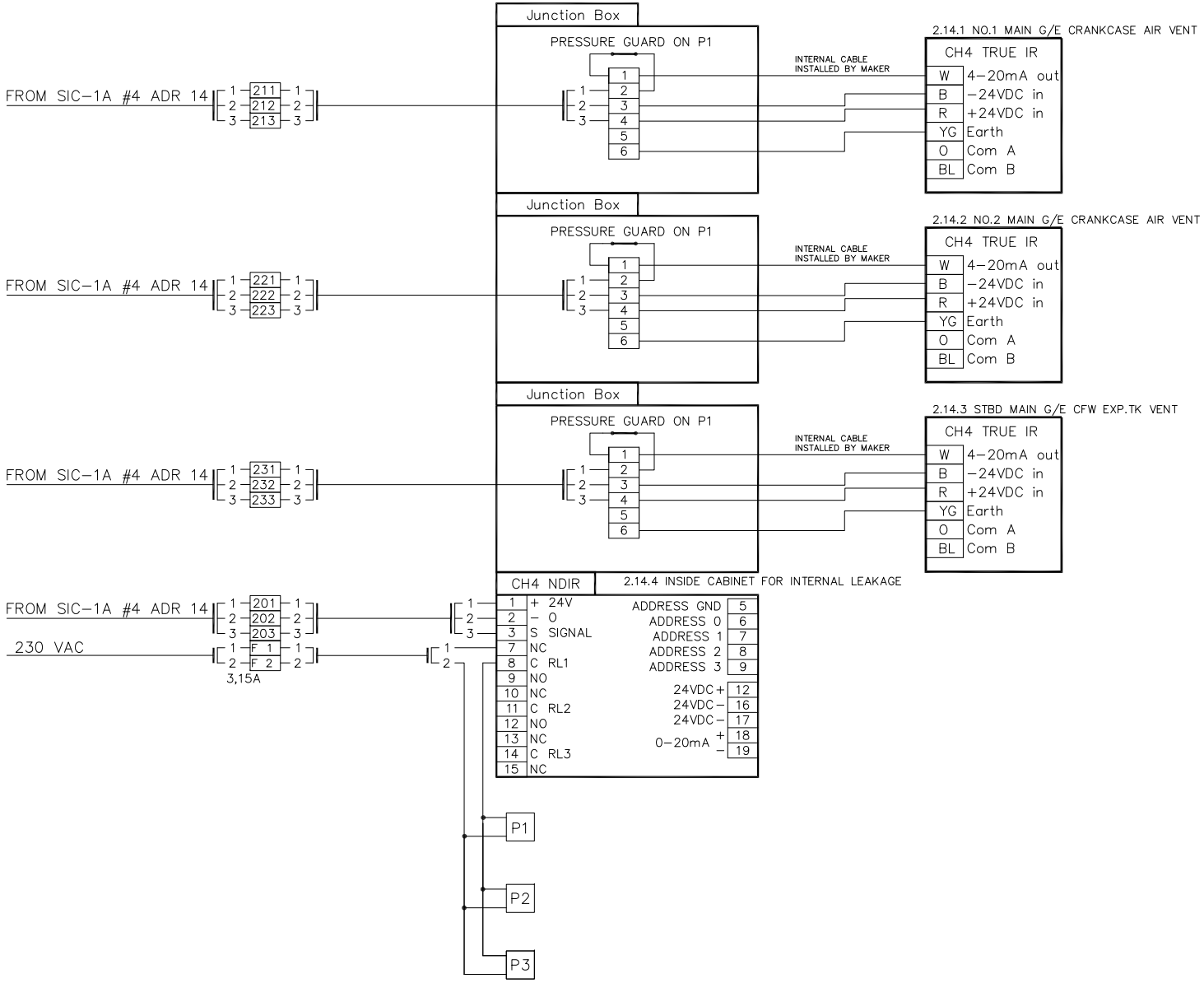

(P1, P2, P3: 2L Pumps)

INTERNAL ELECTRICAL CONNECTION-GDCAB1

Project: BW MARITIME			SHI, H2074
Project No: 28567GA	Size A3-4	Scale N/A	CONNECTION DRAWING
Consilium Göteborg, Sweden www.consilium.se	Design YSN	Approved WYL	GAS DETECTION SYSTEM
Copyright Consilium Marine AB	—		SALWICO GDS
	Date: 10.04.13		Drawing no. 28567.GDS.03.02 · Ver. — · Page 2

Rev.	Revision note	Date	Sign.
—			

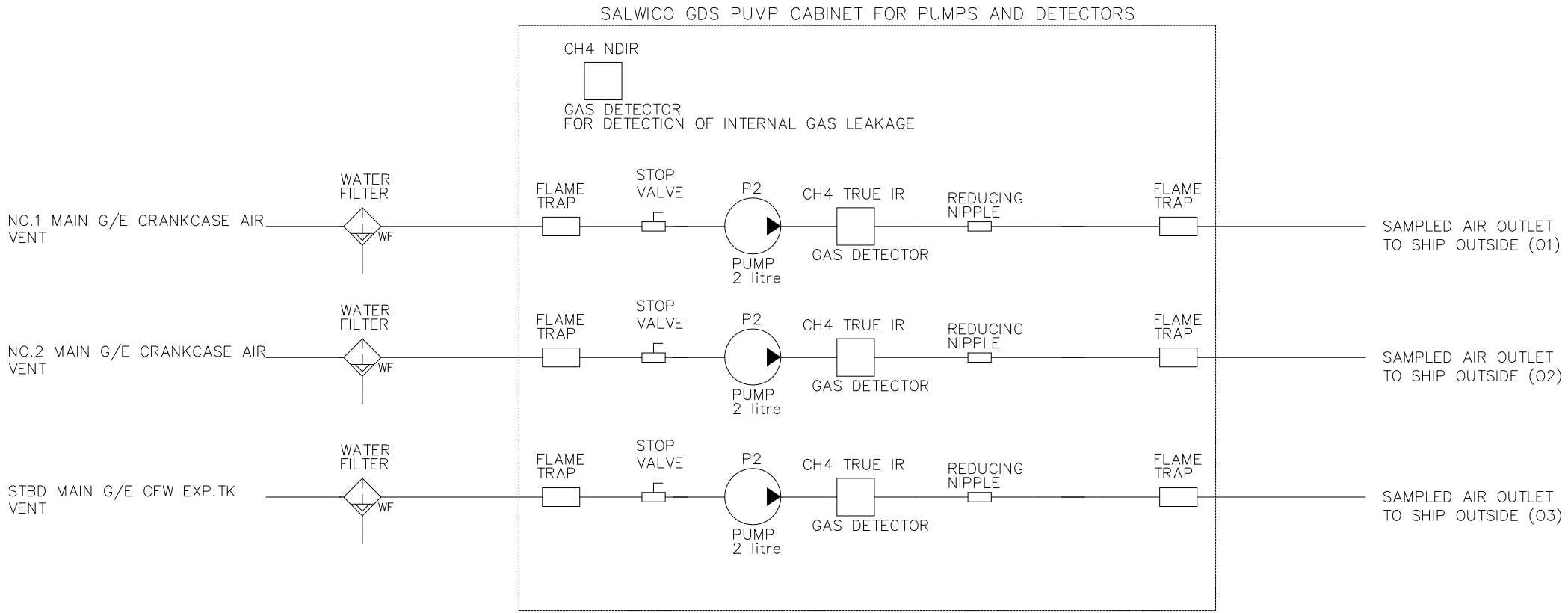

DIAGRAM/FLOW CHART-GDCAB1

Rev.	Revision note	Date	Sign.
–			

Project: BW MARITIME
Project No: 28567GA

Consilium
Göteborg, Sweden
www.consilium.se
Copyright Consilium Marine AB

Size	Scale
A3-4	N/A
Design	Approved
YSN	WYL
–	
Date: 10.04.13	

SHI, H2074
CONNECTION DRAWING
GAS DETECTION SYSTEM
SALWICO GDS

Drawing no.	Ver.	Page
28567.GDS.03.02	–	3

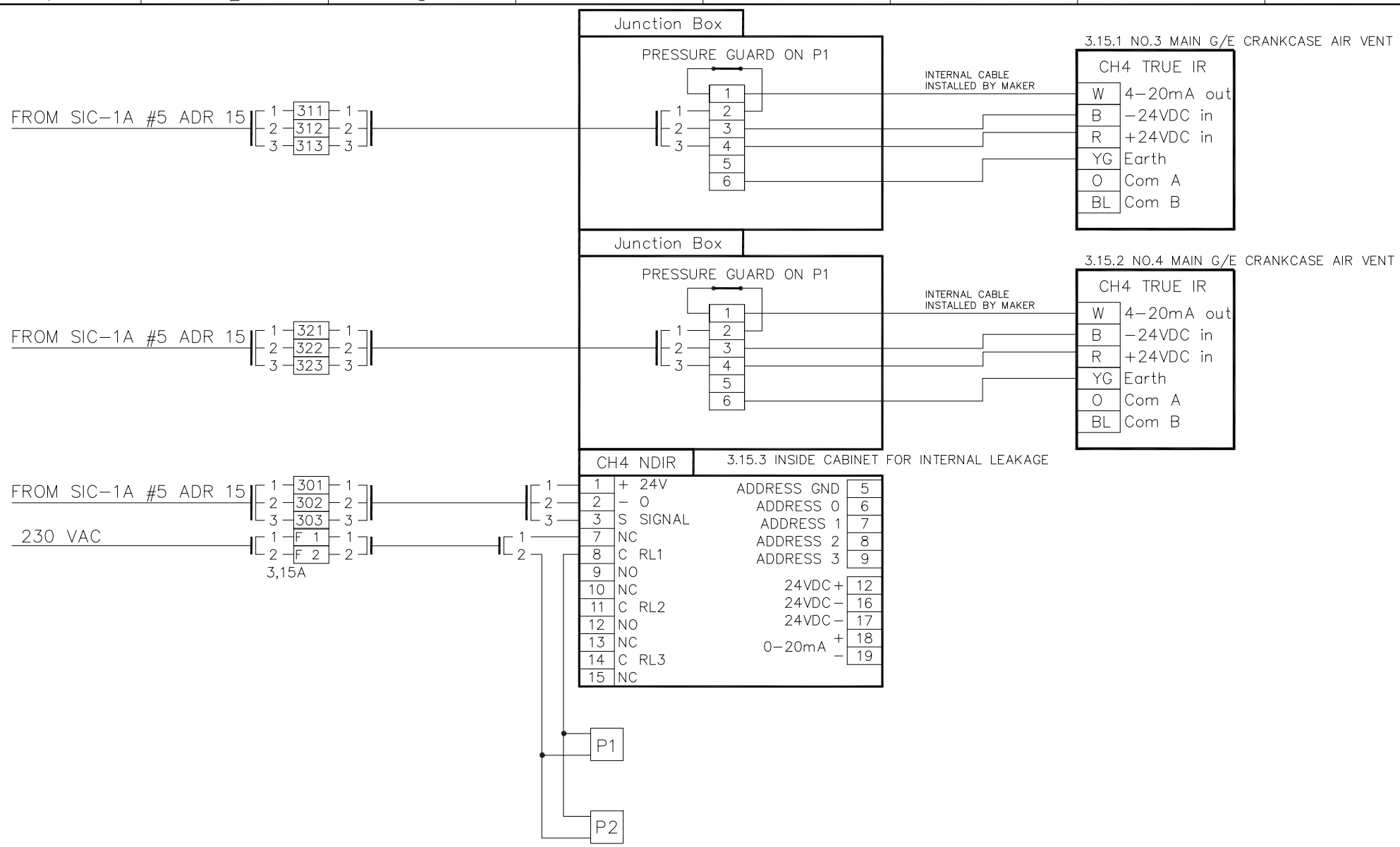

INTERNAL ELECTRICAL CONNECTION–GDCAB2

Project: BW MARITIME			SHI, H2074
Project No: 28567GA	Size A3–4	Scale N/A	CONNECTION DRAWING
Consilium Göteborg, Sweden www.consilium.se	Design YSN	Approved WYL	GAS DETECTION SYSTEM
Copyright Consilium Marine AB	—		SALWICO GDS
	Date: 10.04.13		Drawing no. 28567.GDS.03.02 · Ver. — · Page 4

Rev.	Revision note	Date	Sign.
–			

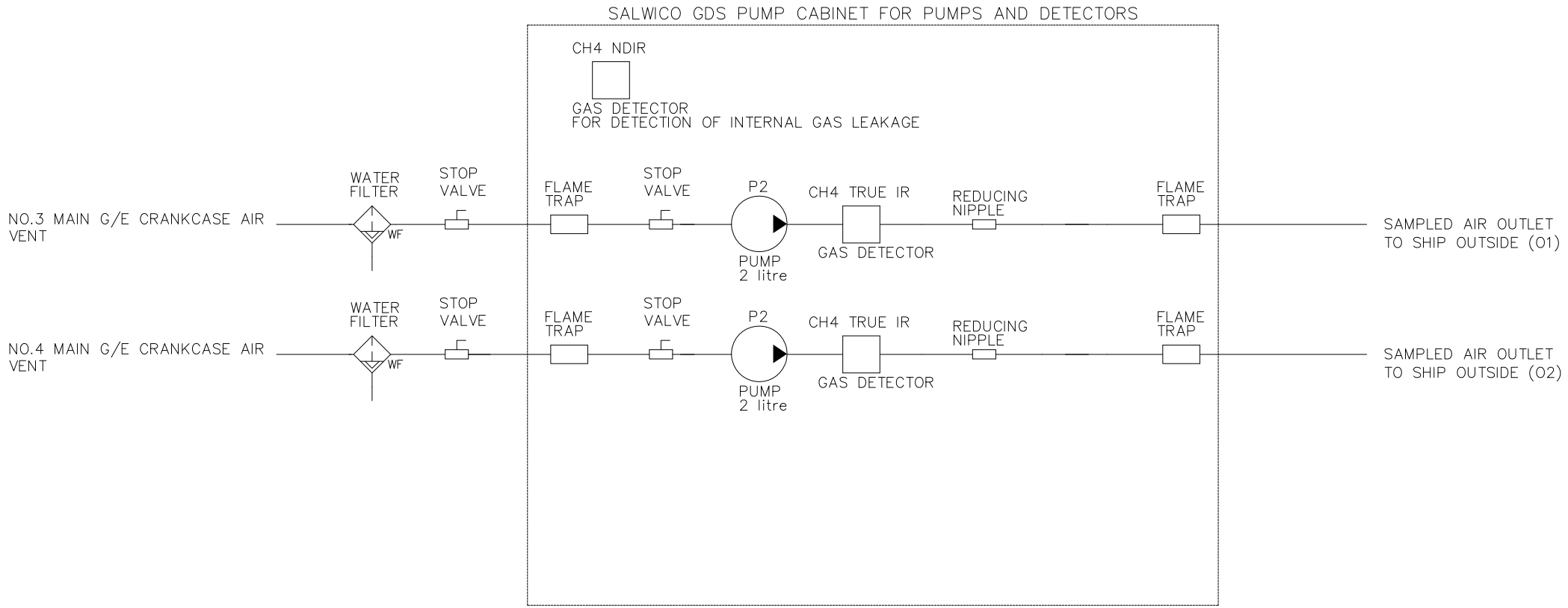

DIAGRAM/FLOW CHART-GDCAB2

Project: BW MARITIME			SHI, H2074
Project No: 28567GA	Size A3-4	Scale N/A	CONNECTION DRAWING
Consilium Göteborg, Sweden www.consilium.se	Design YSN	Approved WYL	GAS DETECTION SYSTEM
Copyright Consilium Marine AB	—		SALWICO GDS
	Date: 10.04.13		Drawing no. 28567.GDS.03.02 · Ver. — · Page 5

Rev.	Revision note	Date	Sign.
—			

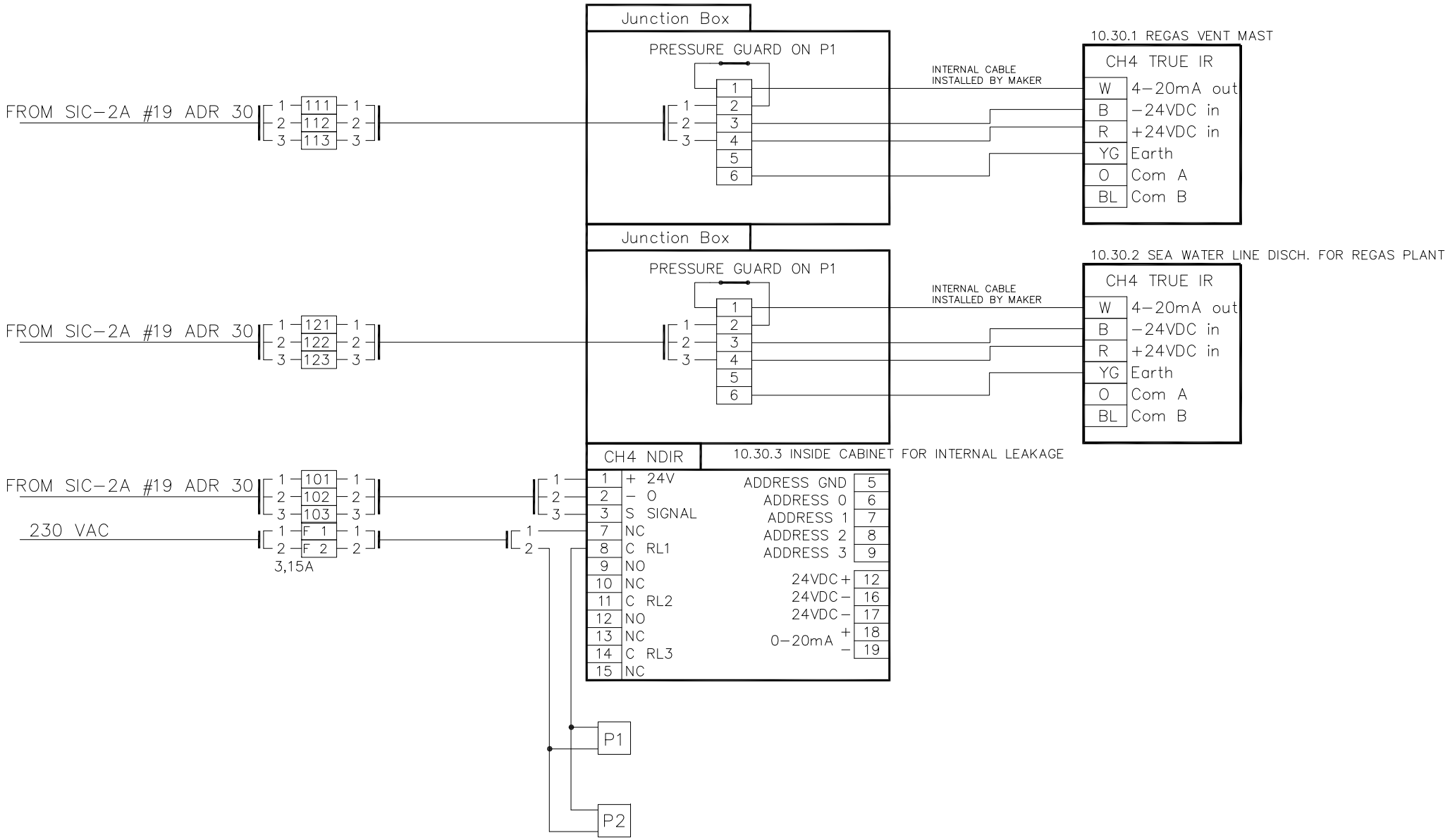

(P1, P2 : 2L Pumps)

INTERNAL ELECTRICAL CONNECTION–GDCAB3

Project: BW MARITIME			SHI, H2074
Project No: 28567GA	Size A3–4	Scale N/A	CONNECTION DRAWING
Consilium Göteborg, Sweden www.consilium.se Copyright Consilium Marine AB	Design YSN	Approved WYL	GAS DETECTION SYSTEM
	—		SALWICO GDS
	Date: 10.04.13		Drawing no. 28567.GDS.03.02 · Ver. — · Page 6

Rev.	Revision note	Date	Sign.
—			

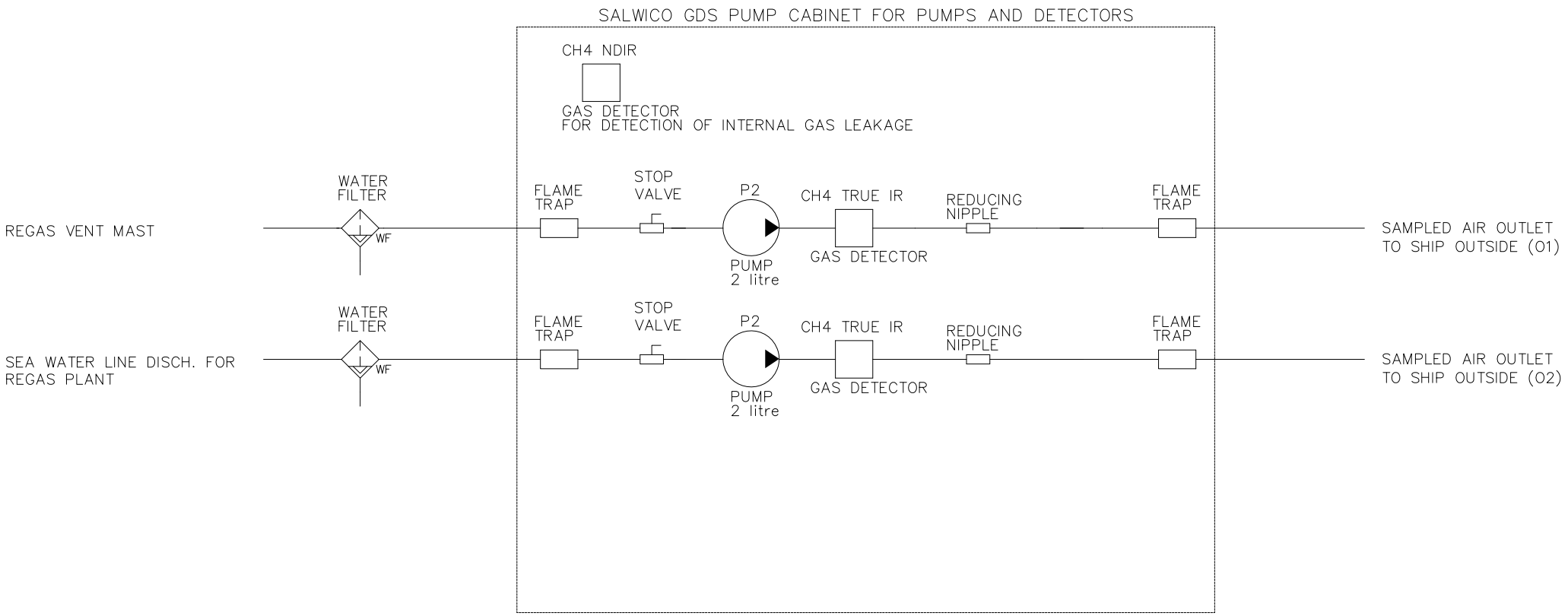

DIAGRAM/FLOW CHART-GDCAB3

Project: BW MARITIME			SHI, H2074
Project No: 28567GA	Size A3-4	Scale N/A	CONNECTION DRAWING
Consilium Göteborg, Sweden www.consilium.se	Design YSN	Approved WYL	GAS DETECTION SYSTEM
Copyright Consilium Marine AB	—		SALWICO GDS
	Date: 10.04.13		Drawing no. 28567.GDS.03.02 · Ver. — · Page 7

Rev.	Revision note	Date	Sign.
—			

G004880

Gas Alarm Panel Module

Control M Gas External

Part no. 5103001-00A

System: Salwico Gas Detection, Salwico Gas Sampling

General Description

The Control M Gas is a control panel with a 4.3" graphical colour display used to manage and supervise a gas alarm system. Control M Gas External can be mounted on any flat surface or flush mounted, independently from a gas alarm cabinet.

Control M Gas External is equipped with communication buses for connecting to the system via BBE interface RS-485 or BBE interface PB-485.

Features:

- A backlit 4.3" graphical colour display
- Alarm buzzer
- LED status indicators
- Backbone Bus Interface RS-485
- Backbone Bus Interface PB-485 (Power Boost loop)
- USB interface (for service & maintenance)
- Two configurable inputs
- Three programmable outputs

Refer to the User Guide for more information on operating Control M Gas.

For details on assembling a system and definitions of common system terms, refer to the Installation Manual.

Data

Operating voltage range	22-48 VDC
Current consumption (at 24V)	92 mA
Ingress protection	IP55
Operating temperature range	-5°C to +55°C
Weight	620 g
Display	4.3", 480×272 pixels, TFT
USB port	USB 1.1 Embedded Host
RS-485 interface	Isolated
2 digital inputs	24 VDC, open circuit supervision
3 digital outputs	24 VDC max. 40 mA , no supervision

Indicators and Buttons

G004914

Refer to the User Guide for more information.

Addressing

Available addresses for Control M Gas External are between 1 and 10.

As a system master controller it must have address 1.

Terminals

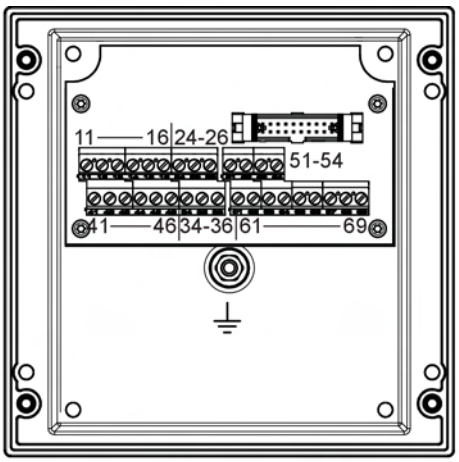

CONNECTION BOARD

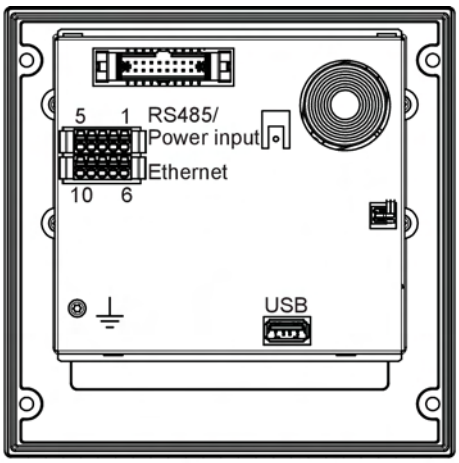

FRONT PANEL REAR

EXTERNAL CONTROL M GAS ADDRESS: 1	12	ISOLATED SERIAL INTERFACE CHANNEL	SG	69
			D–	68
			D+	67
	11	OUTPUT #3 PROGRAMMABLE	24V 40mA I	66
			+	65
	10	OUTPUT #2 PROGRAMMABLE	24V 40mA I	64
			+	63
	9	OUTPUT #1 PROGRAMMABLE	24V 40mA I	62
			+	61
	8	INPUT #2	–	54
			+	53
	7	INPUT #1	–	52
			+	51
	6	BACKBONE BUS EXTERNAL RS485/PB485–2B		46
			D–	45
			D+	44
	5	POWER INPUT/OUTPUT 19–48VDC	PBx	43
			–	42
			+	41
	4	BACKBONE BUS EXTERNAL RS485/PB485–1B		36
			D–	35
			D+	34
	3	BACKBONE BUS EXTERNAL RS485/PB485–2A		26
			D–	25
			D+	24
	2	BACKBONE BUS EXTERNAL RS485/PB485–1A		16
			D–	15
			D+	14
	1	POWER INPUT/OUTPUT 19–48VDC	PBx	13
			–	12
			+	11

ETHERNET	ETHERNET Tx	Tx-	10
	=> *Only for firmware updates*	Tx+	9
	ETHERNET Rx	Rx-	8
	=> *Only for firmware updates*	Rx+	7
	GROUND, ETHERNET	G	6
RS485	POWER INPUT 24VDC	V+	5
	=> *Not used*	V-	4
	EXTENSION BUS RS485	D+	3
	=> *Not used*	D-	2
	SIGNAL GROUND, RS485	SG	1

G004917

Connections

Control M Gas External mounts outside of the central.

Using ribbon cables connect the Control M Gas to Terminal M Gas.

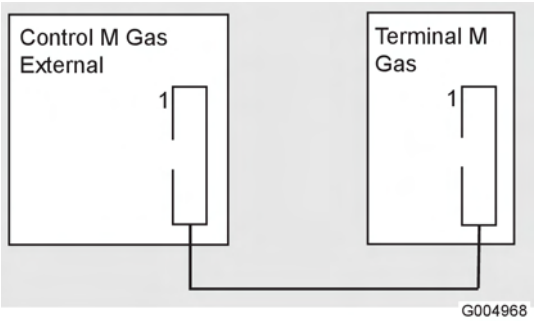

Figure 1. Control M Gas connected to Terminal M Gas

RS-485 Termination

For RS-485 Termination the built-in terminator (120 ohm) can be activated with the RS-485 DIP switch located on the rear of the front panel.

For recommendations and examples on RS-485 Termination, refer to the Installation Manual.

Table 1. DIP switch for RS-485 Termination

DIP Switch No.	Description	ON	OFF
1	BBE1	Active	Deactivated
2	BBE2	Active	Deactivated

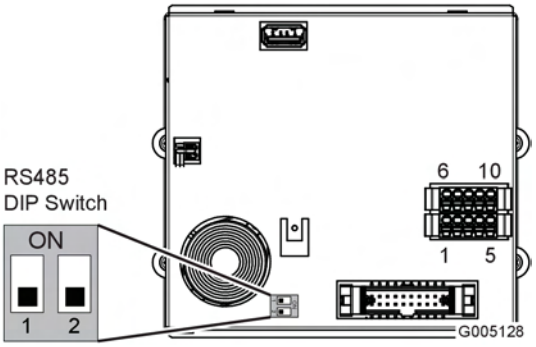

Module Dimensions (mm)

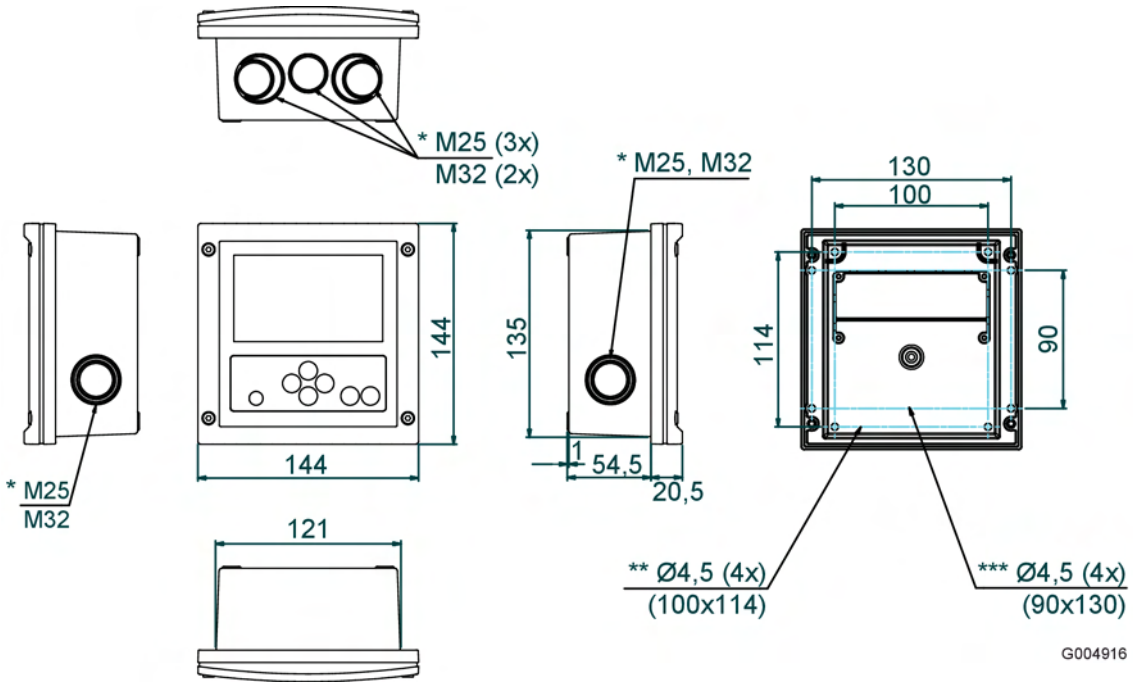

* Knockouts

** Mounting holes for wall mount

*** Mounting holes for inset

Mounting Dimensions (mm)

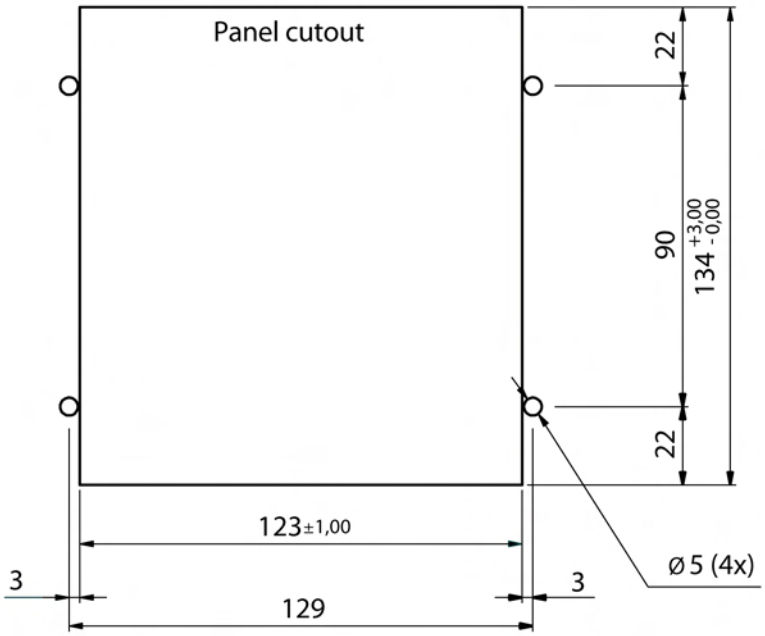

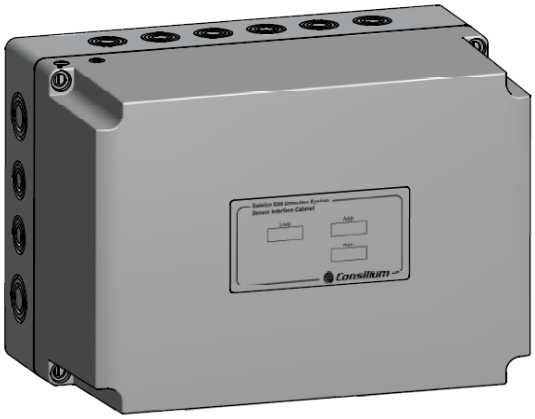

Sensor Interface Cabinet
Salwico SIC-1A

Part no: SIC-1A

Description
The SIC-1A is an interface unit for 1 to 4pcs of gas detectors. It is intended for use with Salwico Gas Detection System and can interface with gas detectors with a 4-20mA transmitter interface.

The Salwico SIC-1A is connected to the power boost loop and will accommodate up to four analogue inputs for gas detectors at the local area instead of the main central. The advantage with this is that the cables will be monitored for breaks and short circuits, it will also save lots of installation costs due to shorter cables.

The SIC-1A detects when the gas concentration exceeds the user defined gas alarm levels and warnings (Pre Alarm, A1, A2).

The unit continuously monitors the gas detector for faults and also checks the supply voltage of the detector interface.

The combination of the double-sided communication loop and two inbuilt short circuit isolators makes the SIC-1A invulnerable to any short circuit or cable break.

For more information, please refer to the datasheets of the system modules and the Salwico Gas Detection System manuals.

Important!
It is possible to connect up to a maximum of 20pcs of gas detectors to one power boost loop (PB Loop) with 5pcs of SIC-1A.

Please consider this when designing the system set-up.

Data

PB Loop voltage	48VDC
Detector voltage	24 ± 6VDC
Power consumption	~22W with 4 detectors
Ingress Protection	IP55
Cable terminals	2.5mm^2
Temperature range	-25°C to +55°C
Cable OD	10pcs of M20 TET, 8-13mm. (2pcs is optional, included in plastic bag)
Material, cabinet	Polystyrol
Colour, cabinet	RAL7035
Weight	~1.7 kg

Consilium Marine & Safety AB
P.O. Box 8763, SE-402 76 Göteborg
Phone +46 31 7107700 Fax +46 31 7107800
www.consilium.se

Wall mounted cabinet dimensions (mm)

Description	Partno.
175x250x150 Enclosure for wall mounting	5103010-00A

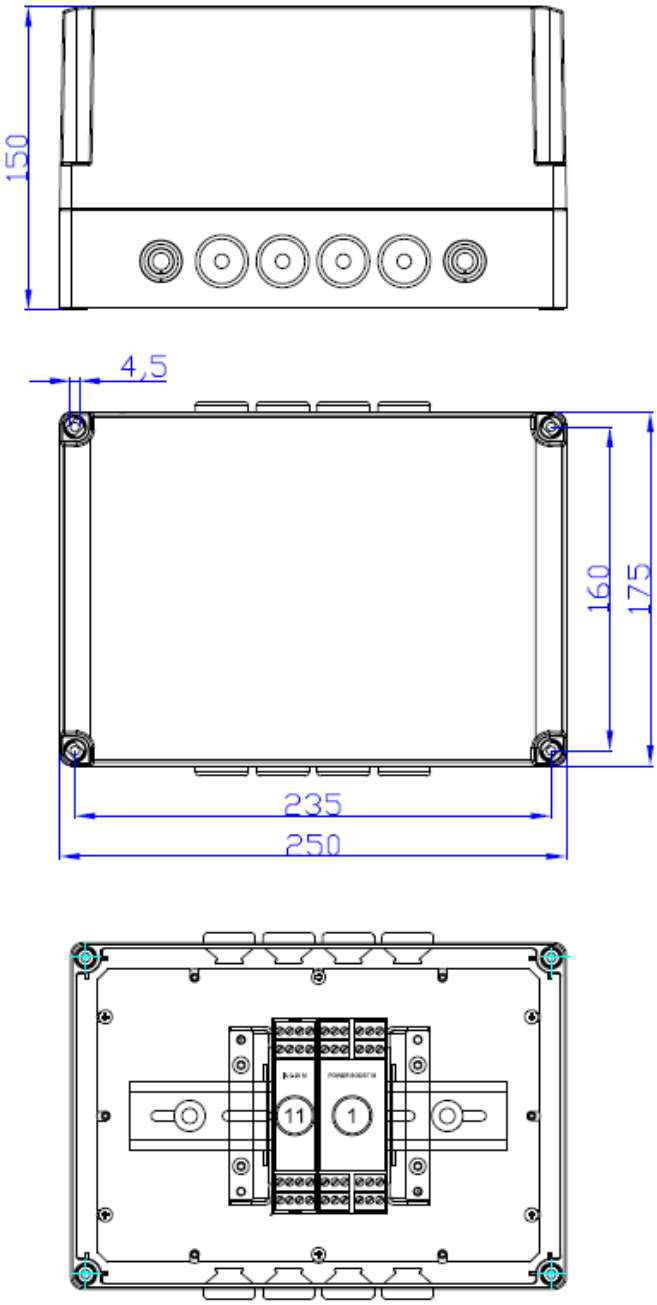

Consilium Marine & Safety AB
P.O. Box 8763, SE-402 76 Göteborg
Phone +46 31 7107700 Fax +46 31 7107800
www.consilium.se

Connections Power Boost Loop

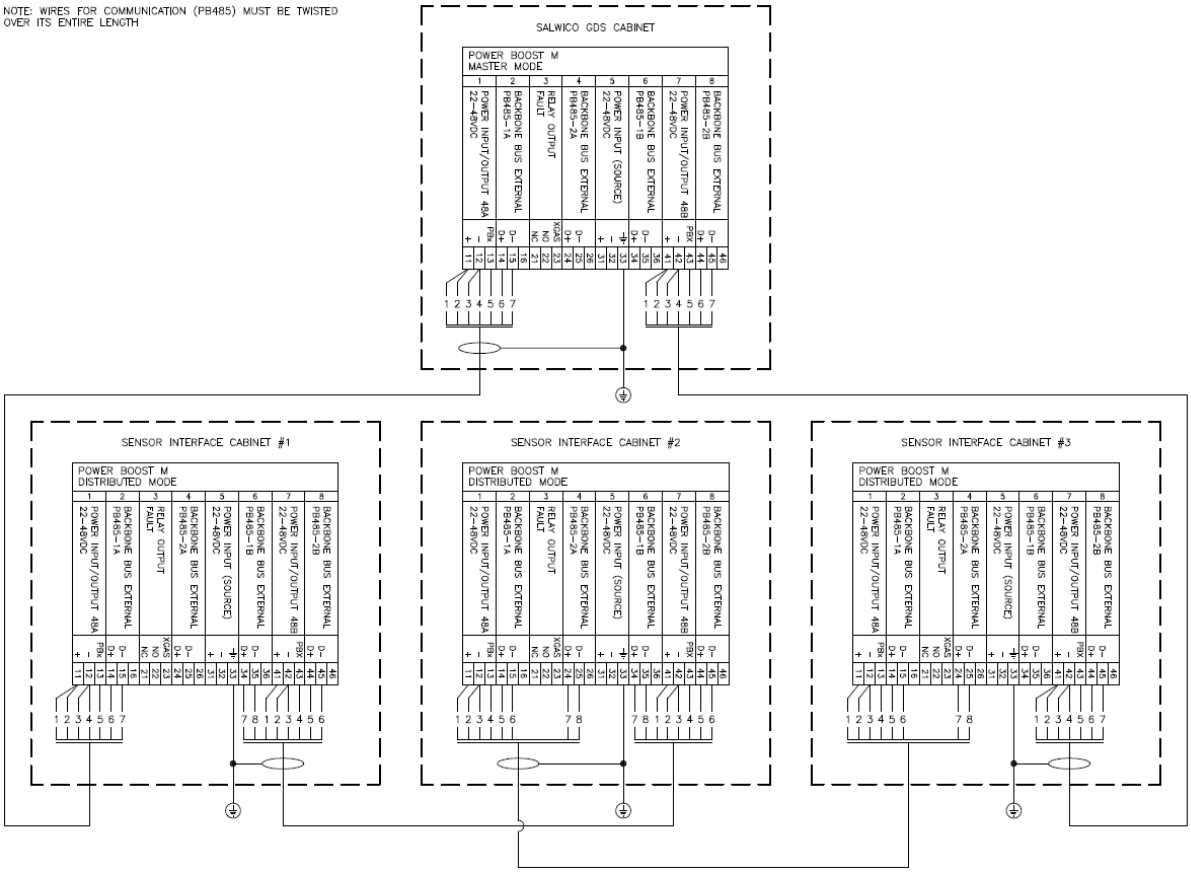

Consilium Marine & Safety AB
P.O. Box 8763, SE-402 76 Göteborg
Phone +46 31 7107700 Fax +46 31 7107800
www.consilium.se

Connections Gas Detectors

Description	Partno.	Quantity	Address
Analogue M	5100003-00A	1pc	11
Power Boost M	5110004-00A	1pc	N/A

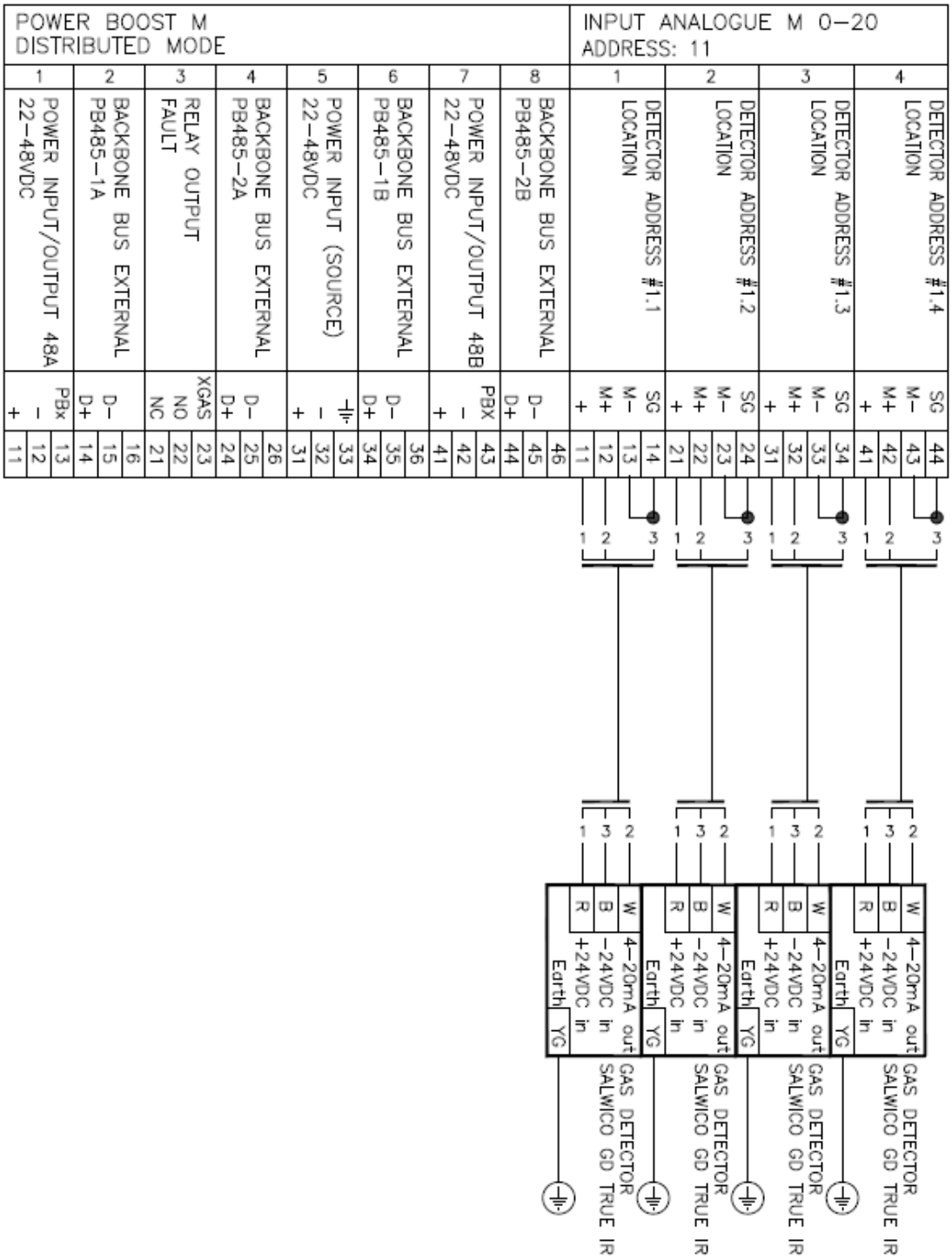

Consilium Marine & Safety AB
P.O. Box 8763, SE-402 76 Göteborg
Phone +46 31 7107700 Fax +46 31 7107800
www.consilium.se

Sensor Interface Cabinet
Salwico SIC-2A

Part no: SIC-2A

Description
The SIC-2A is an interface unit for 1 to 8pcs of gas detectors. It is intended for use with Salwico Gas Detection System and can interface with gas detectors with a 4-20mA transmitter interface.

The Salwico SIC-2A is connected to the power boost loop and will accommodate up to eight analogue inputs for gas detectors at the local area instead of the main central. The advantage with this is that the cables will be monitored for breaks and short circuits, it will also save lots of installation costs due to shorter cables.

The SIC-2A detects when the gas concentration exceeds the user defined gas alarm levels and warnings (Pre Alarm, A1, A2).

The unit continuously monitors the gas detector for faults and also checks the supply voltage of the detector interface.

The combination of the double-sided communication loop and two inbuilt short circuit isolators makes the SIC-2A invulnerable to any short circuit or cable break.

For more information, please refer to the datasheets of the system modules and the Salwico Gas Detection System manuals.

Important!
It is possible to connect up to a maximum of 20pcs of gas detectors to one power boost loop (PB Loop) with 5pcs of SIC-2A.

Please consider this when designing the system set-up.

Data

PB Loop voltage	48VDC
Detector voltage	24 ± 6VDC
Power consumption	~22W with 4 detectors ~44W with 8 detectors
Ingress Protection	IP55
Cable terminals	2.5mm^2
Temperature range	-25°C to +55°C
Cable OD	10pcs of M20 TET, 8-13mm. (2pcs is optional, included in plastic bag)
Material, cabinet	Polystyrol
Colour, cabinet	RAL7035
Weight	~1.8 kg

Consilium Marine & Safety AB
P.O. Box 8763, SE-402 76 Göteborg
Phone +46 31 7107700 Fax +46 31 7107800
www.consilium.se

Wall mounted cabinet dimensions (mm)

Description	Partno.
175x250x175 Enclosure for wall mounting	5103010-00A

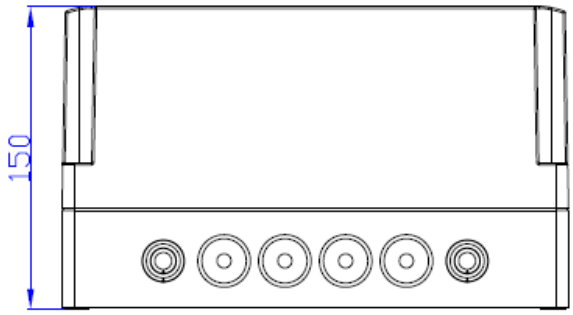

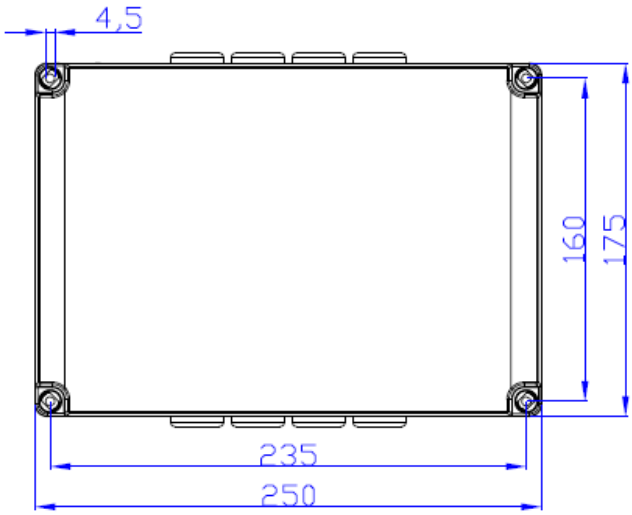

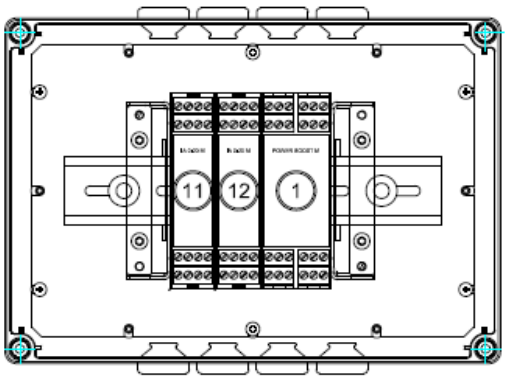

Consilium Marine & Safety AB
P.O. Box 8763, SE-402 76 Göteborg
Phone +46 31 7107700 Fax +46 31 7107800
www.consilium.se

Connections Power Boost Loop

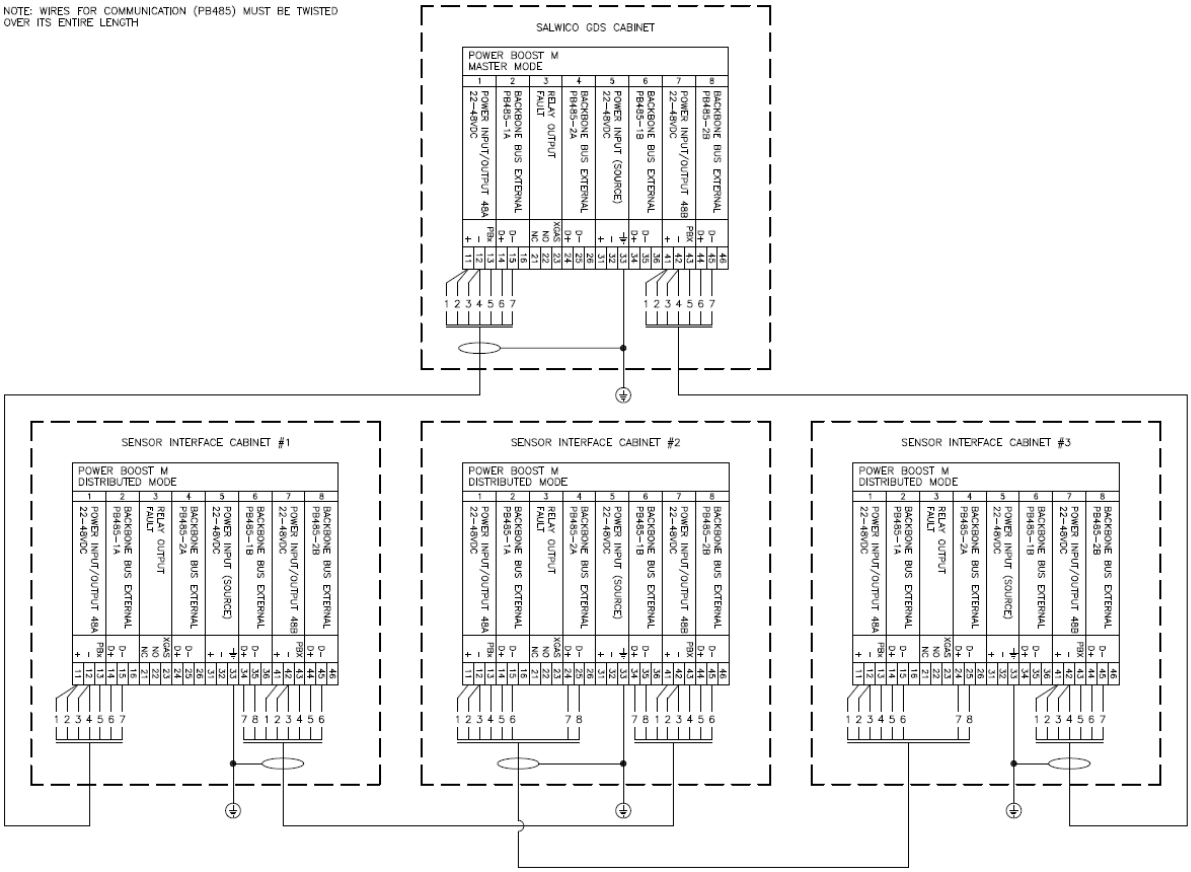

Consilium Marine & Safety AB
P.O. Box 8763, SE-402 76 Göteborg
Phone +46 31 7107700 Fax +46 31 7107800
www.consilium.se

Connections Gas Detectors

Description	Partno.	Quantity	Address
Analogue M	5100003-00A	2pcs	11, 12
Power Boost M	5110004-00A	1pc	N/A

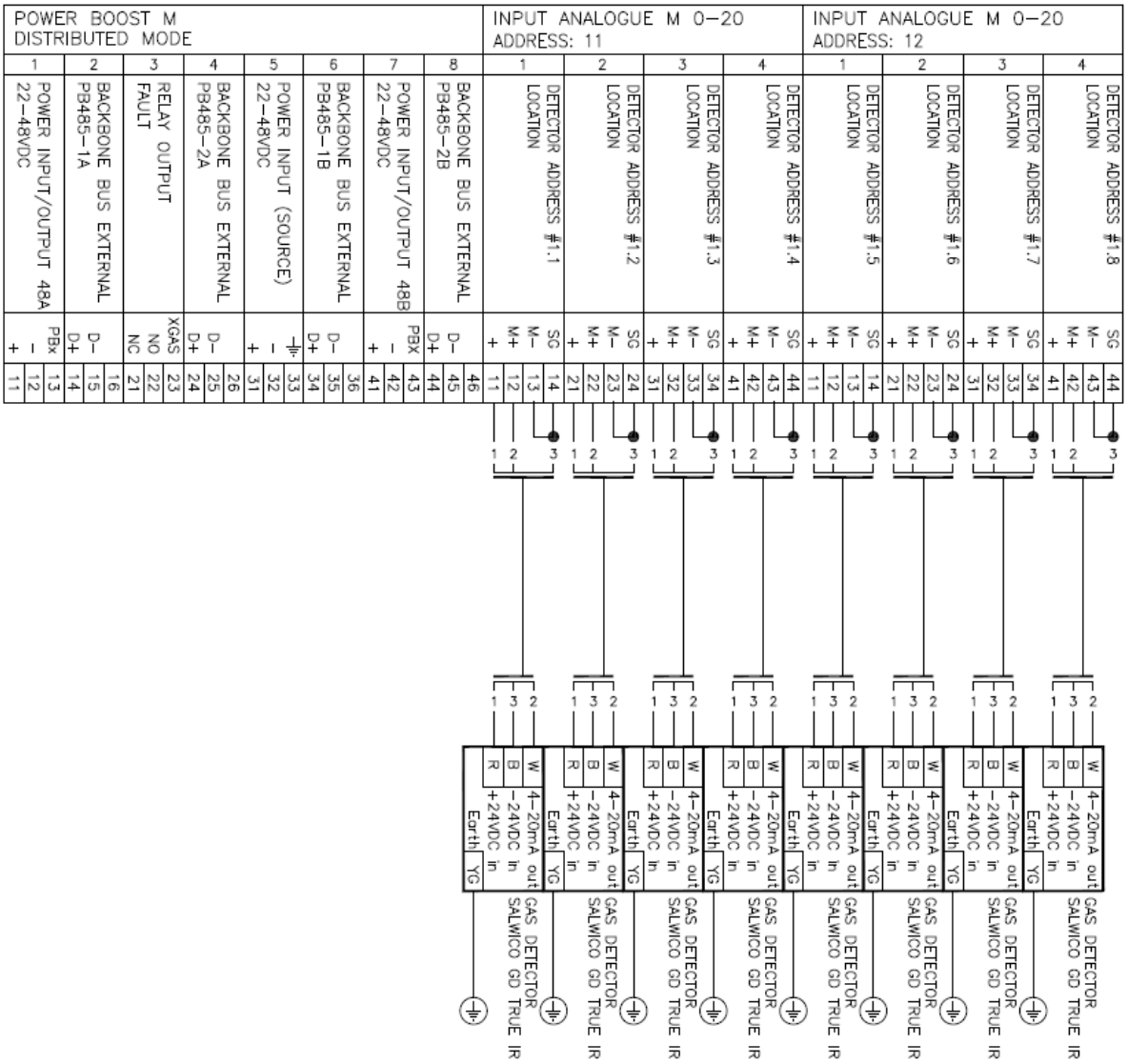

Consilium Marine & Safety AB
P.O. Box 8763, SE-402 76 Göteborg
Phone +46 31 7107700 Fax +46 31 7107800
www.consilium.se

Sensor Interface Cabinet
Salwico SIC-Exd

Part no: SIC-1A-1-Exd
SIC-1A-2-Exd
SIC-1A-3-Exd
SIC-1A-4-Exd
SIC-2A-5-Exd
SIC-2A-6-Exd
SIC-2A-7-Exd
SIC-2A-8-Exd

Description

The SIC-Exd is an explosion proof sensor interface unit that can support up to 8pcs of transmitters. It is designed to be used in a distributed system and supports the following type of 4-20mA interfaces:
• 2-wire
• 3-wire, current source
• 3-wire, current sink
• 4-wire

The SIC-Exd is built around the Power Boost M which is designed to distribute power and supervise the connections in the Salwico Gas Detection System.

This module can supply:
• Centralized power through a Power Boost Loop, which is secured against interruption and short circuit.
• Compensation for voltage drop in the cable for distributed modules in gas alarm systems
• Transfer of xGas status between the Power Boost modules on a Power Boost Loop and the system modules connected to the Power Boost module on the internal Backbone Bus (BBI).
• External Backbone Bus (BBE) PB-485 communication between system modules.
• Protection of the External Backbone Bus (BBE) PB-485 communication between modules against interruptions and short circuits.
• Supervise the 48 VDC and the PbxGas signals (on the Power Boost Loop).
• Transform External Backbone Bus (BBE) PB-485 to Internal Backbone Bus (BBI) RS-485.

For more information, please refer to the datasheets of the system modules and the Salwico Gas Detection System manuals.

Important!

It is possible to connect up to a maximum of 20pcs of gas detectors to one power boost loop (PB Loop) with 5pcs of SIC-XX.

Please consider this when designing the system.

Data

PB Loop voltage	48VDC
Detector voltage	24 ± 6VDC
Power consumption	~38W with 8 detectors
Ingress Protection	IP67
Cable terminals	2.5mm^2
Temperature range	-20°C to +60°C
EX class	Ex d IIC T4 Gb
Certificate No.	INERIS 10ATEX0036
Cable OD	3 to 10pcs of M20 Exd cable glands, 5,5-13mm.
Material, cabinet	Copper free aluminium alloy
Colour	Standard epoxy painting RAL 7005
Weight	~10,7kg

Consilium Marine & Safety AB
P.O. Box 8763, SE-402 76 Göteborg
Phone +46 31 7107700 Fax +46 31 7107800
www.consilium.se

Enclosure dimensions (mm)

Description (Enclosure).	Part no.
ENCLOSURE Exd (250x250x205)	5103008-00A

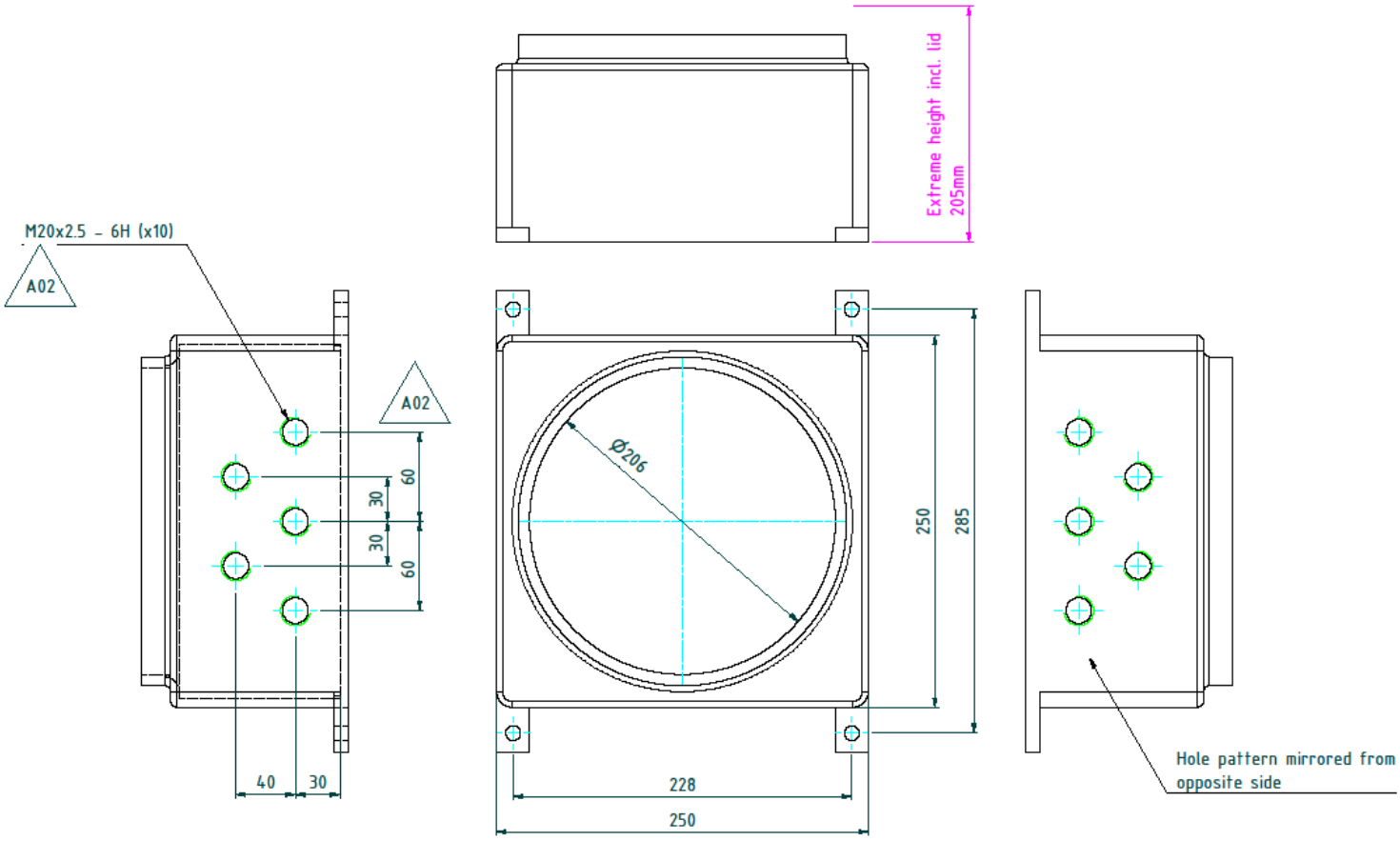

Fixing holes diameter: 4 x 10mm

Consilium Marine & Safety AB
P.O. Box 8763, SE-402 76 Göteborg
Phone +46 31 7107700 Fax +46 31 7107800
www.consilium.se

Connections Power Boost Loop

Description (Modules).	Part no.	Quantity	Address
Analogue M	5110003-XXA	1-2pcs	11-12
Power Boost M	5110004-XXA	1pc	N/A

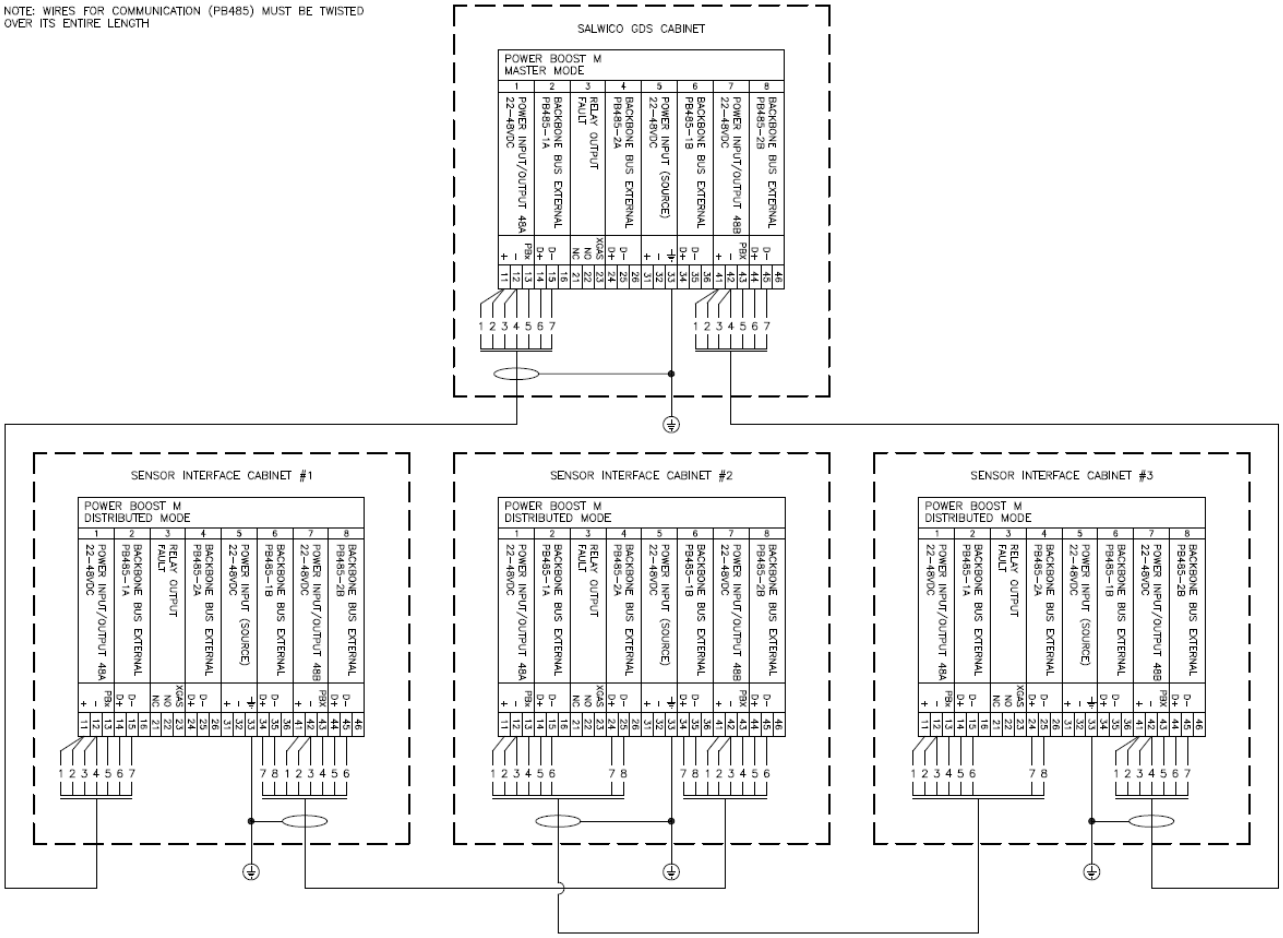

Consilium Marine & Safety AB
P.O. Box 8763, SE-402 76 Göteborg
Phone +46 31 7107700 Fax +46 31 7107800
www.consilium.se

Connections Gas Detectors

INPUT ANALOGUE M 4-20
ADDRESS:

1				2				3				4			
DETECTOR ADDRESS 11.1				DETECTOR ADDRESS 11.2				DETECTOR ADDRESS 11.3				DETECTOR ADDRESS 11.4			
+	M+	M-	SG	+	M+	M-	SG	+	M+	M-	SG	+	M+	M-	SG
11	12	13	14	21	22	23	24	31	32	33	34	41	42	43	44

G004952

Connection Examples

2-wire interface:

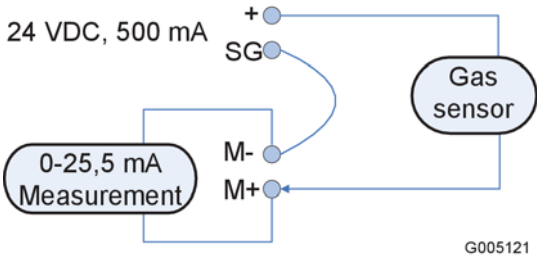

3-wire interface, current sink:

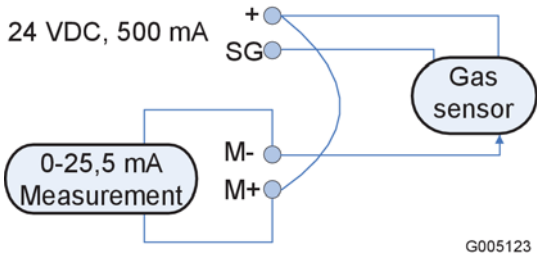

3-wire interface, current source:

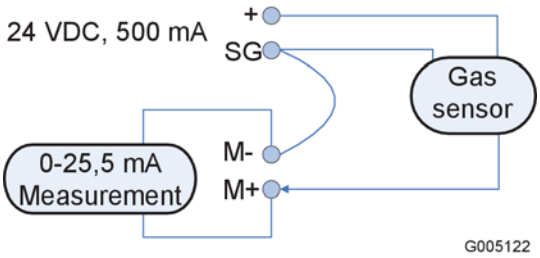

4-wire interface:

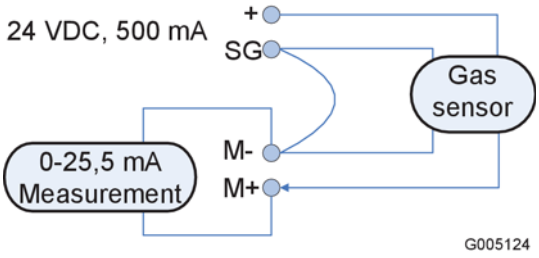

Consilium Marine & Safety AB
P.O. Box 8763, SE-402 76 Göteborg
Phone +46 31 7107700 Fax +46 31 7107800
www.consilium.se

IR Gas detector
Salwico GD TRUE IR

Part no. 5200138+5200139

G003512

System: Salwico GS3000, GS4

General Description

The Salwico GD TRUE IR gas detector is a point detector for gas concentration monitoring potentially hazardous environment.

The Salwico GD TRUE IR is based on infrared absorption. Solid state design improves reliability, long-term stability and accuracy in continuous measurement of gas concentrations in ambient air.

Compared with catalytic sensors the Salwico GD TRUE IR has the following advantages:

- Proven high reliability and long term stability results in low test frequency and no calibration cost
- Automatic self test
- Failure will not give gas alarm
- Presence of oxygen is not required during equipment life time
- Immunity to poisoning from H_2S, silicone and other agents
- No saturation effects from high gas concentrations
- The gas flow rate has no influence on accuracy
- Several different mounting possibilities

Special junction boxes, Ex proof housings or duct mounting brackets are available upon request.

Data

Detection method	IR-absorption, dual wavelength, dual path
Gases detected	Hydrocarbons
Nominal voltage	24 VDC
Working voltage	18-32 VDC
Working current	2 mA
Power consumption	Max 4.5 W
Ingress protection	IP66
Expected lifetime	15 years
Ex proof housing	EExd IIC T4
Response time	T50<4.5 sec, T90<6.5 sec
Max flow rate when fitted in duct	40 M/sec
Accuracy	Baseline < ±1% LEL 50% FSD < ±2% LEL
Temperature range	-40°C to +65°C
Material	316 Stainless steel
Colour	Black/Silver
Weight	1.6 kg
Safety approvals detector	ATEX Ex, II 2 G EEx d IIC T5 (T_{amb} -40°C to +55°C) T4 (T_{amb} -40°C to +65°C) UL/CSA Class 1, Div 1, groups B, C, and D (-40°C to +65°C) GOST and SAA
Safety approvals junction box	ATEX Ex, II 2GD Ex e II Ex tD A21 T6 T85
EMC compliance	EN50270, EN50054, EN50057, CSA C22.2 152

Part number

5200138-00A	Salwico GD WH TRUE IR C_3H_8
5200138-01A	Salwico GD WH TRUE IR CH_4

Accessories

5200139-00A	Salwico GD WH TRUE IR Junction box
5200202-00A	Handheld Interrogator TRUE IR
5200203-00A	Duct Mounting Kit TRUE IR

Mounting

Always mount horizontally, oriented as illustrated in figure below.

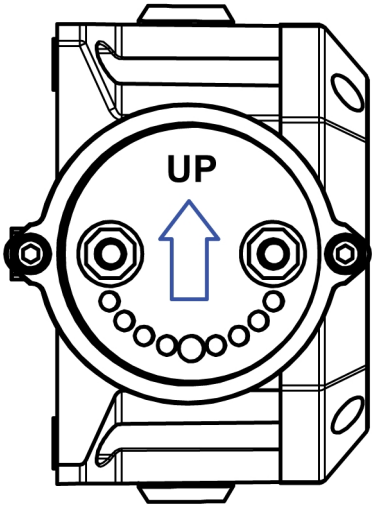

G003558

Connection

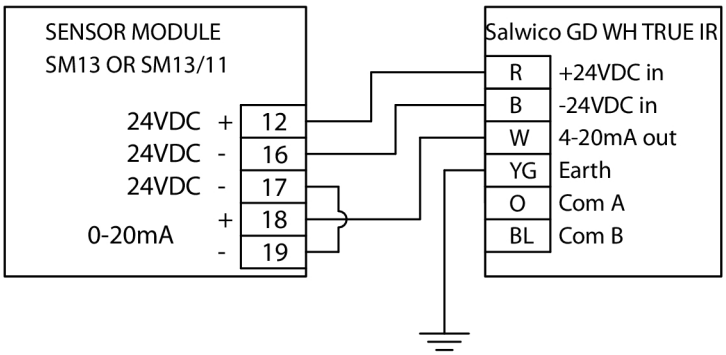

G003560

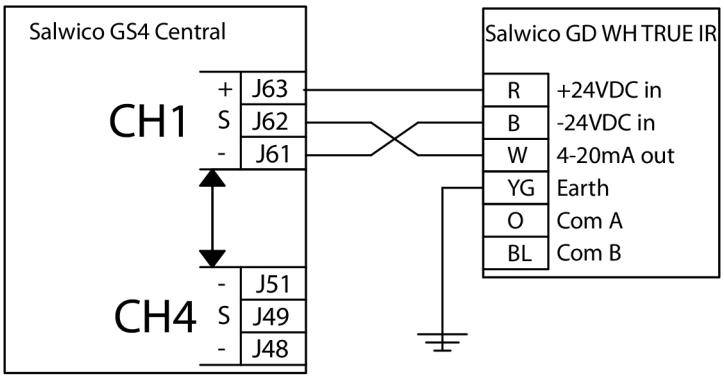

G003624

R	=	RED
B	=	BLACK
W	=	WHITE
YG	=	YELLOW and GREEN
O	=	ORANGE
BL	=	BLUE

Dimensions (mm)

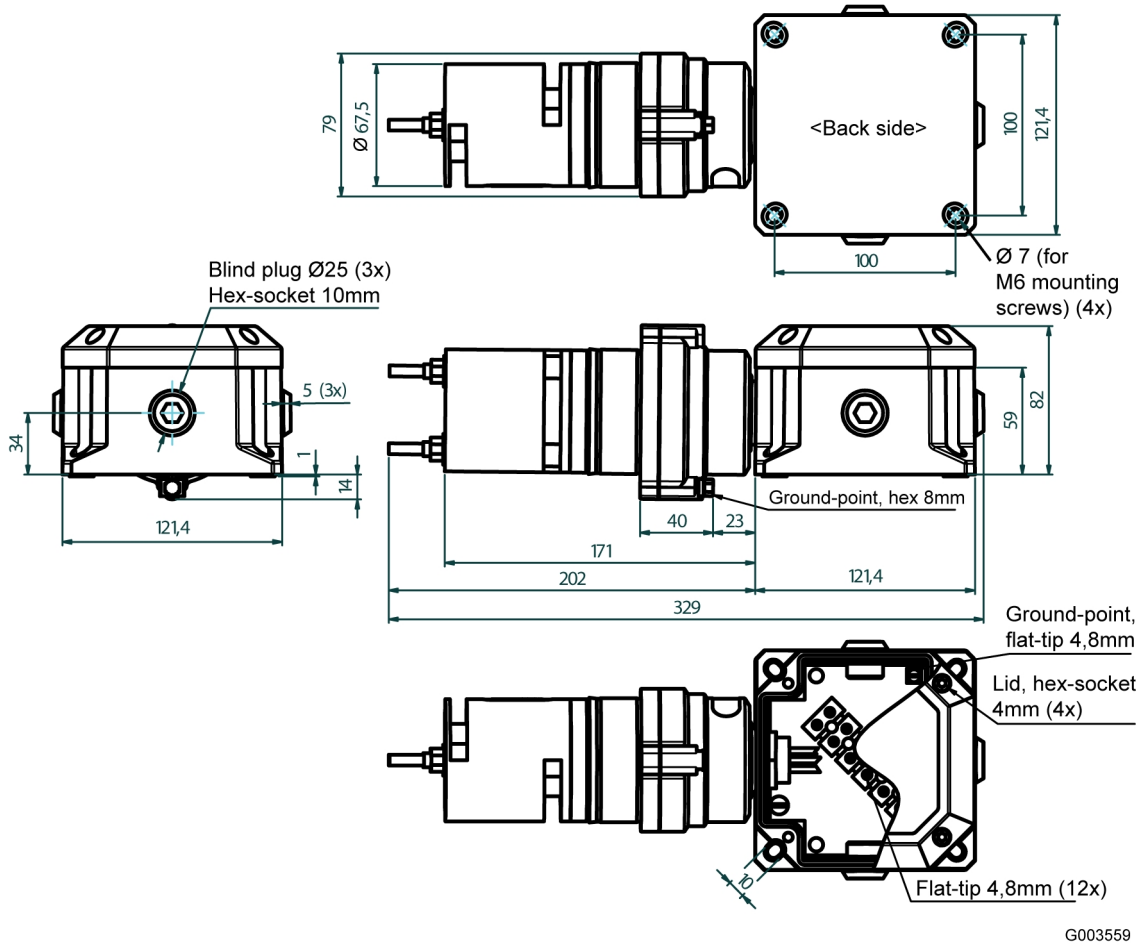

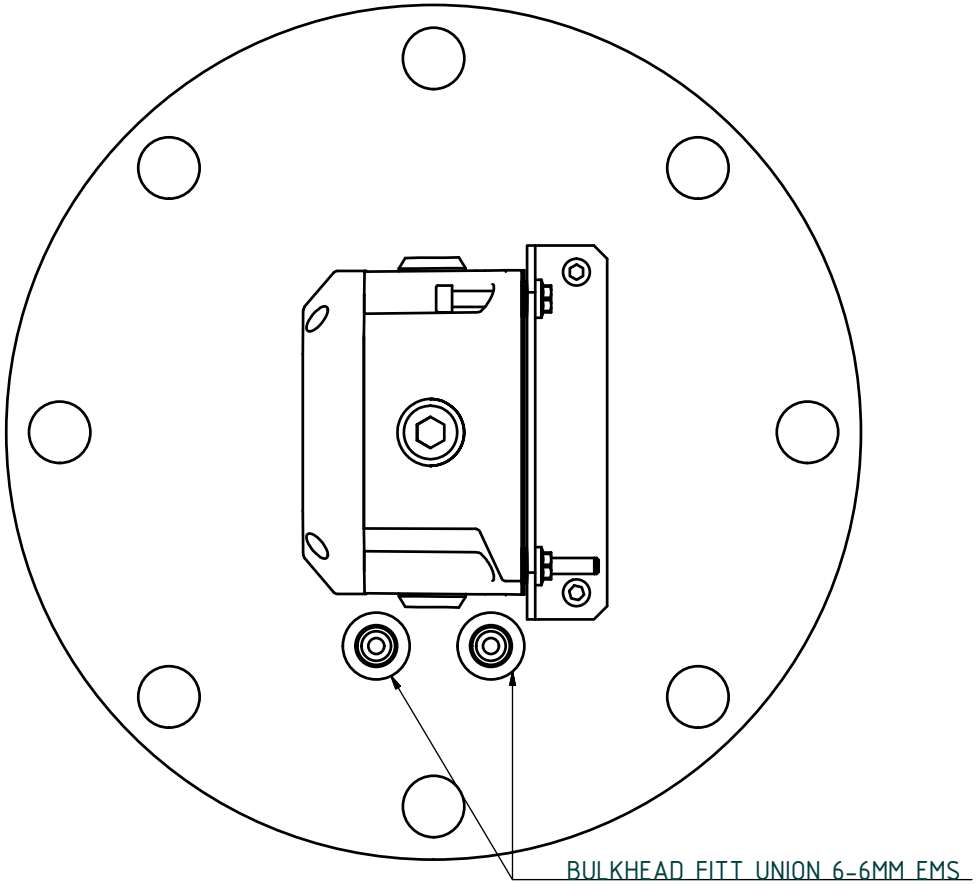

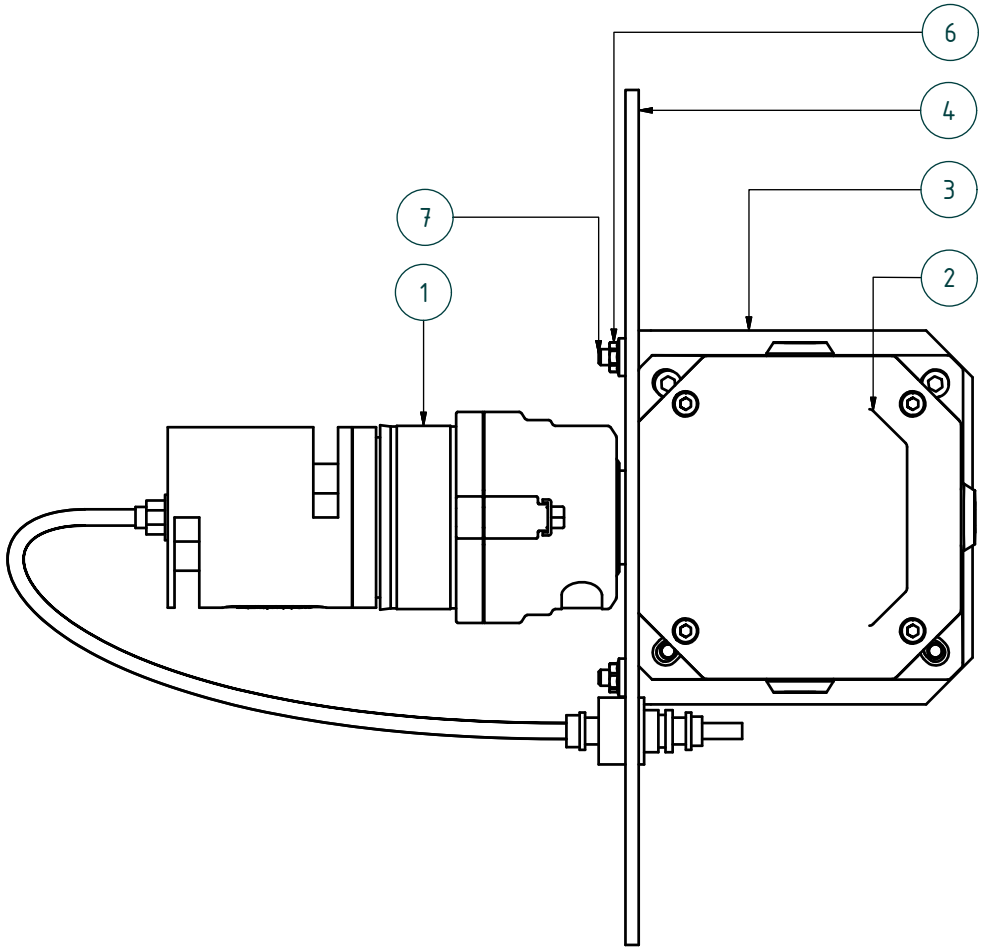

Item #	Drawing no.	Part no.	Qty	Description
7			6	M6x18, DIN 912, ISO 4762, Stainless steel
6			6	Nut, ISO 4161 M6 FZB
5			1	Nut Optima Plus
4	6300772		1	Duct plate 320mm
3	6300773		1	Bracket junktion Box
2		5200139-00A	1	Junction Box
1		5200138-00A	1	Gas detector, Honeywell Searchpoint Optima Plus

File: 6300771 Optima-Plus Duct Mounting Assembly.dwg

Project:

Consilium
Göteborg, Sweden
www.consilium.se
Copyright Consilium

Size	Scale
A3	1:2
Design	Approved
JAN	

Preliminary

Date: 2011-10-14

Optima-Plus Duct Mounting Assembly

Drawing no. 6300771

Rev. A01

Page 1 / 1

Rev.	Revision note	Date	Sign.	Appr.
A01	New Drawing	2011-10-14	JAN	

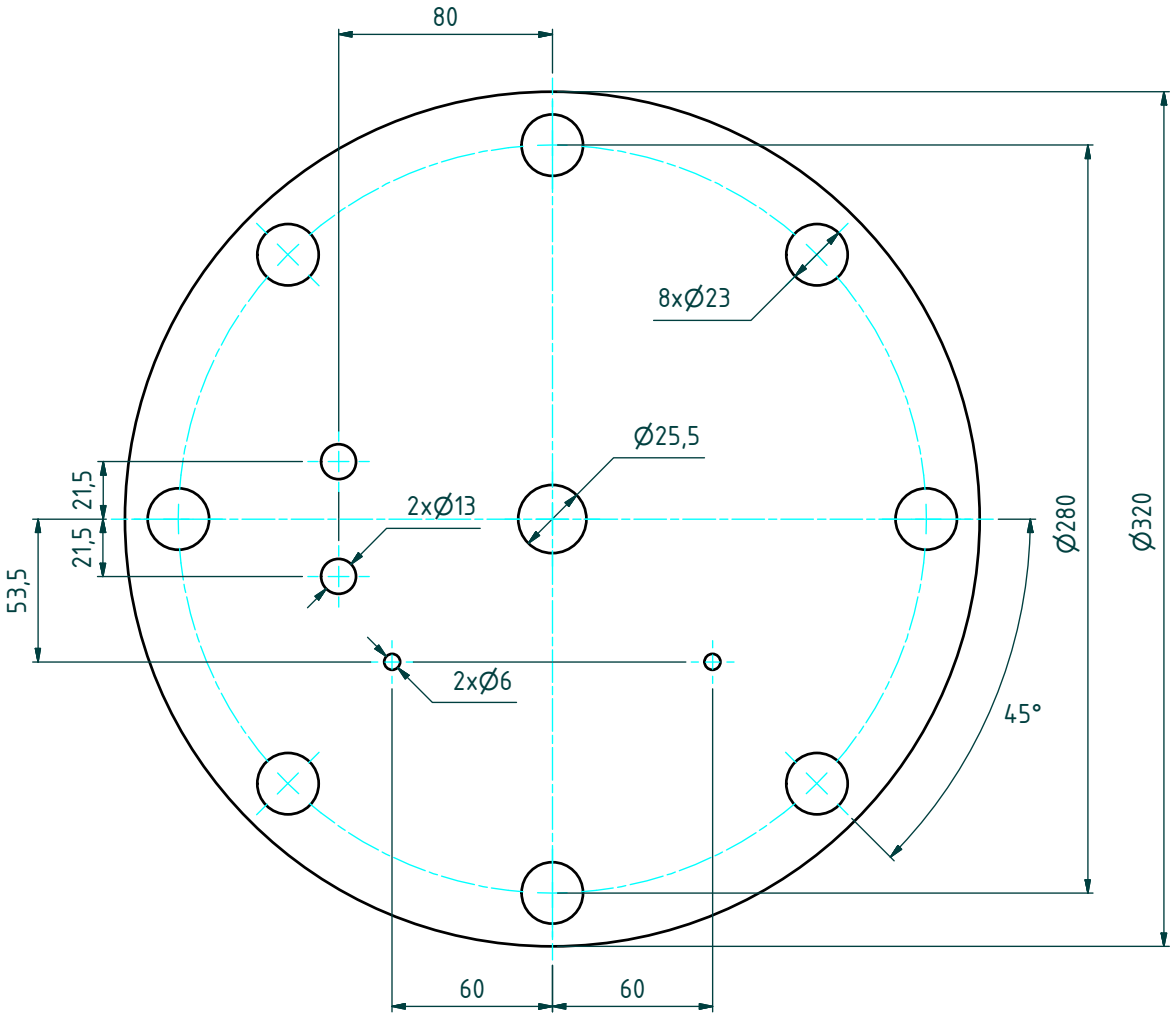

Material: Stainless steel 316

Thicknes: 5mm

General tolerances according to SS-ISO 2768-1 C

Item #	Drawing no.	Part no.	Qty	Description

File: 6300772 Optima-Plus Duct Plate 320mm.dwg

Project:

Consilium
Göteborg, Sweden
www.consilium.se
Copyright Consilium

Size	Scale
A3	1:2
Design	Approved
JAN	

Preliminary

Date: 2011-10-13

Duct plate 320mm

Drawing no. 6300772

Rev. A01

Page 1 / 1

Rev.	Revision note	Date	Sign.	Appr.
A01	New Drawing	2011-10-13	JAN	

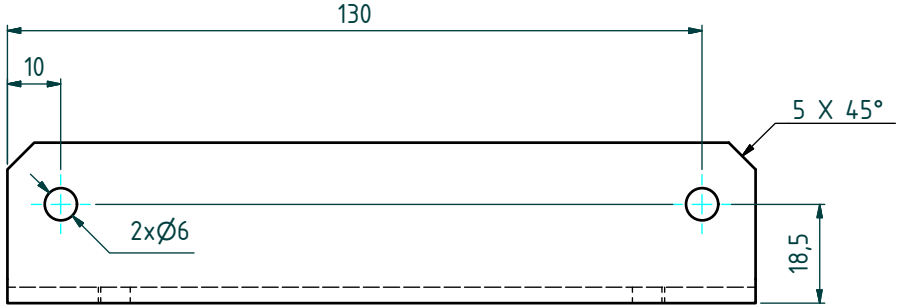

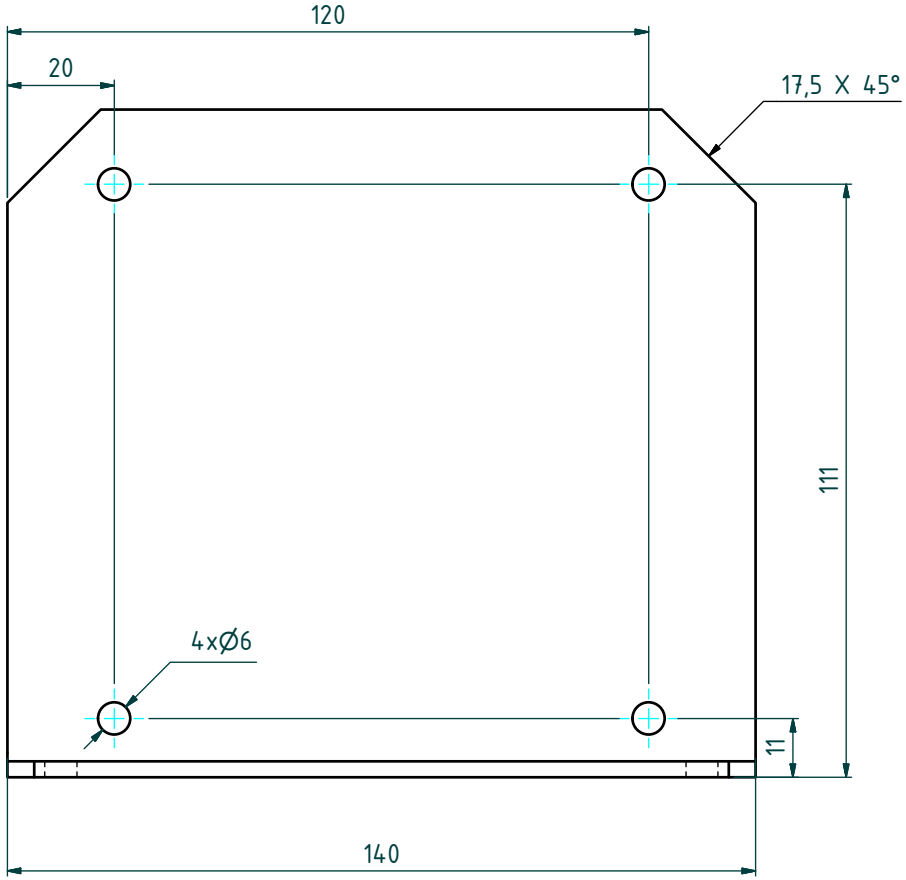

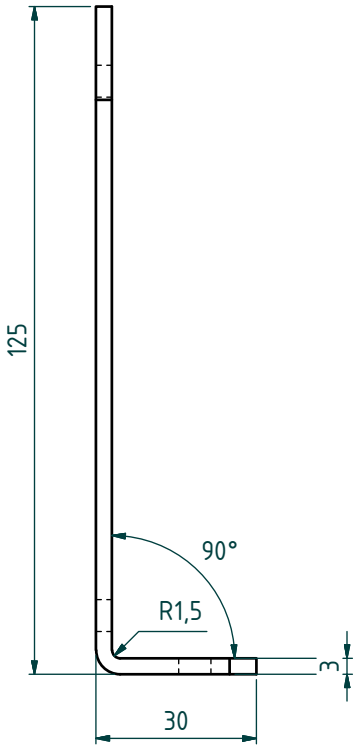

Material: SS-EN 2333-02
General tolerances according to SS-ISO 2768-1 C

Item #	Drawing no.	Part no.	Qty	Description

File: 6300773 Optima-Plus Duct Bracket.dwg

Project:

Consilium
Göteborg, Sweden
www.consilium.se
Copyright Consilium

Size	Scale
A3	1:1
Design	Approved
JAN	

Preliminary

Date: 2011-10-13

Bracket junktion Box

Drawing no. 6300773

Rev. A01

Page 1 / 1

Rev.	Revision note	Date	Sign.	Appr.
A01	New Drawing	2011-10-13	JAN	

G003858

Gas Detector
Salwico GD

Part no. see below

System: Salwico GS3000, SW2020, GS4

General Description

The Salwico GD range of gas detectors is used to monitor areas where flammable, oxygen deficiency and toxic gases may pose a hazard environment.

The Salwico GD uses a number of sensor technologies including catalytic bead, electrochemical cell and Non-dispersed (NDIR).

Salwico GD has a long list of user friendly features:

- One hand operation for sensor replacement
- Clear multi-function backlit display
- Tri-colour backlight display for status indication
- 4-20 mA signal output
- 3 Switch relays
- Modbus

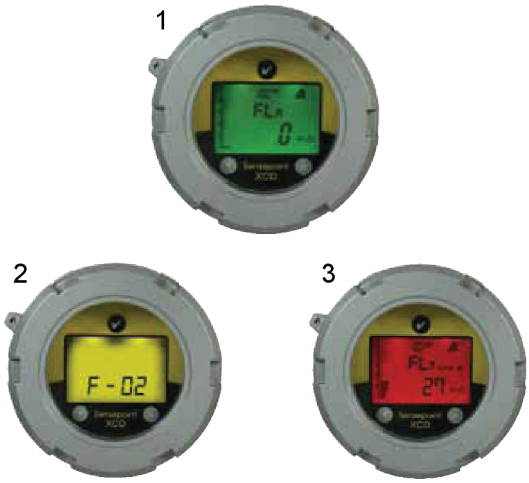

G003859

Figure 1. Example of status indications for Normal (1), Fault/Warning (2) and Alarm (3).

Data

Detection method	Catalytic bead, Electrochemical cell, Non-dispersed
Gases detected	See list below
Nominal voltage	24 VDC
Working voltage	16-32 VDC
Power consumption	< 5 W max
Ingress protection	IP66
Expected lifetime	5 years
Ex proof housing	Ex II 2 GD Ex d IIC Gb T6
Response time (T90)	Depending on sensor, between 25s to 65s
Max flow rate when fitted in duct	7 M/sec
Accuracy	< +/- 5% of FSD
Temperature range	-40°C to +65°C (IR -20°C to +50°C)
Material	Epoxy painted Aluminium
Colour	Yellow with silver lit
Weight	1.7 kg

Detectable Gases

Gas Name	Gas	Selectable Gas Range(s)	Default Range	Acceptable Calibration Range
Oxygen	O_2	25% VOL	25% VOL	20.9% VOL Fixed
Hydrogen Sulphide	H_2S	10 to 100ppm	30ppm	50% as standard (30 to 70% as acceptable)
Carbon Monoxide	CO	100 to 1000ppm	500ppm	50% as standard (30 to 70% as acceptable)
Hydrogen	H_2	1000ppm	1000ppm	50% as standard (30 to 70% as acceptable)
Hydrocarbons (CAT)	HC	20 to 100&LEL	100%LEL (CH4)	50% as standard (30 to 70% as acceptable)
Propane (IR)	C_3H_8	20 to 100&LEL	100%LEL	50% as standard (30 to 70% as acceptable)
Methane (IR)	CH_4	20 to 100&LEL	100%LEL	50% as standard (30 to 70% as acceptable)
Carbon Dioxide (IR)	CO_2	2%Vol	2%Vol	0.8 to 1.2% VOL

Part Numbers

Table 1. Complete Detectors

Part Number	Name	Description
5200260-01A	Salwico GD CAT HC	0-100%LEL HYDROCARBON, CATALYTIC, ALUMINIUM ALLOY, M20 ENTRY
5200260-02A	Salwico GD NDIR CH_4	0-100%LEL METHANE, NDIR, ALUMINIUM ALLOY, M20 ENTRY
5200260-03A	Salwico GD NDIR C_3H_8	0-100%LEL PROPANE, NDIR, ALUMINIUM ALLOY, M20 ENTRY
5200260-04A	Salwico GD NDIR CO_2	0-2%VOL CARBON DIOXIDE, NDIR, ALUMINIUM ALLOY, M20 ENTRY
5200261-01A	Salwico GD EC O_2	0-25%VOL OXYGEN, ELECTRO CHEMICAL, ALUMINIUM ALLOY, M20 ENTRY
5200262-01A	Salwico GD EC H_2S	0-50 PPM HYDROGEN SULPHIDE, ELECTRO CHEMICAL, ALUMINIUM ALLOY
5200262-02A	Salwico GD EC CO	0-250 PPM CARBON MONOXIDE, ELECTRO CHEMICAL, ALUMINIUM ALLOY
5200262-03A	Salwico GD EC H_2	0-1000 PPM HYDROGEN, ELECTRO CHEMICAL, ALUMINIUM ALLOY

Table 2. Spare Sensors

Part Number	Name	Description
5200260-11A	Salwico GD CAT HC Sensor	0-100%LEL HYDROCARBONS, CATALYTIC, CARTRIDGE SENSOR
5200260-12A	Salwico GD NDIR CH_4 Sensor	0-100%LEL METHANE, NDIR, CARTRIDGE SENSOR
5200260-13A	Salwico GD NDIR C_3H_8 Sensor	0-100%LEL PROPANE, NDIR, CARTRIDGE SENSOR
5200260-14A	Salwico GD NDIR CO_2 Sensor	0-2%VOL CARBON DIOXIDE, NDIR, CARTRIDGE SENSOR
5200261-11A	Salwico GD EC O_2 Sensor	0-25%VOL OXYGEN, ELECTRO CHEMICAL, CARTRIDGE SENSOR
5200262-12A	Salwico GD EC H_2S Sensor	0-50 PPM HYDROGEN SULPHIDE, ELECTRO CHEMICAL, CARTRIDGE SENSOR
5200262-13A	Salwico GD EC CO Sensor	0-250 PPM CARBON MONOXIDE, ELECTRO CHEMICAL, CARTRIDGE SENSOR
5200262-14A	Salwico GD EC H_2 Sensor	0-1000 PPM HYDROGEN, ELECTRO CHEMICAL, CARTRIDGE SENSOR

Installation

Electrical Installation

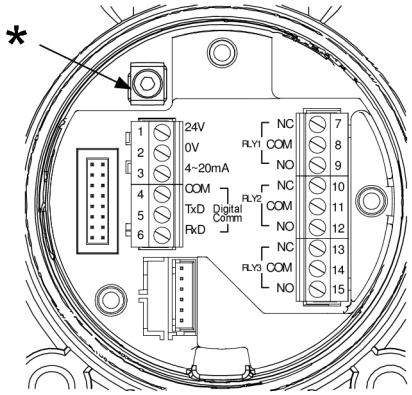

G003857

Figure 2. Terminal Blocks

* Internal earth / Ground point

Table 3. Terminal Module Connections

Terminal no.	Marking	Connection	Description
1	24V	+VE Supply (16 - 32VDC)	Controller Connections
2	0V	-VE Supply (0VDC)	
3	4~20mA	Current Output Signal	
4	COM	Drain	MODBUS RTU. RS485 (Optional)
5	TxD	MODBUS B (+)	
6	RxD	MODBUS A (-)	
7	RLY1/NC	Normally Closed	Programmable Relay 1 (Default A1)
8	RLY1/COM	Common	
9	RLY1/NO	Normally Open	
10	RLY2/NC	Normally Closed	Programmable Relay 2 (Default A2)
11	RLY2/COM	Common	
12	RLY2/NO	Normally Open	
13	RLY3/NC	Normally Closed	Programmable Relay 3 (Default Fault)
14	RLY3/COM	Common	
15	RLY3/NO	Normally Open	

Dimensions (mm)

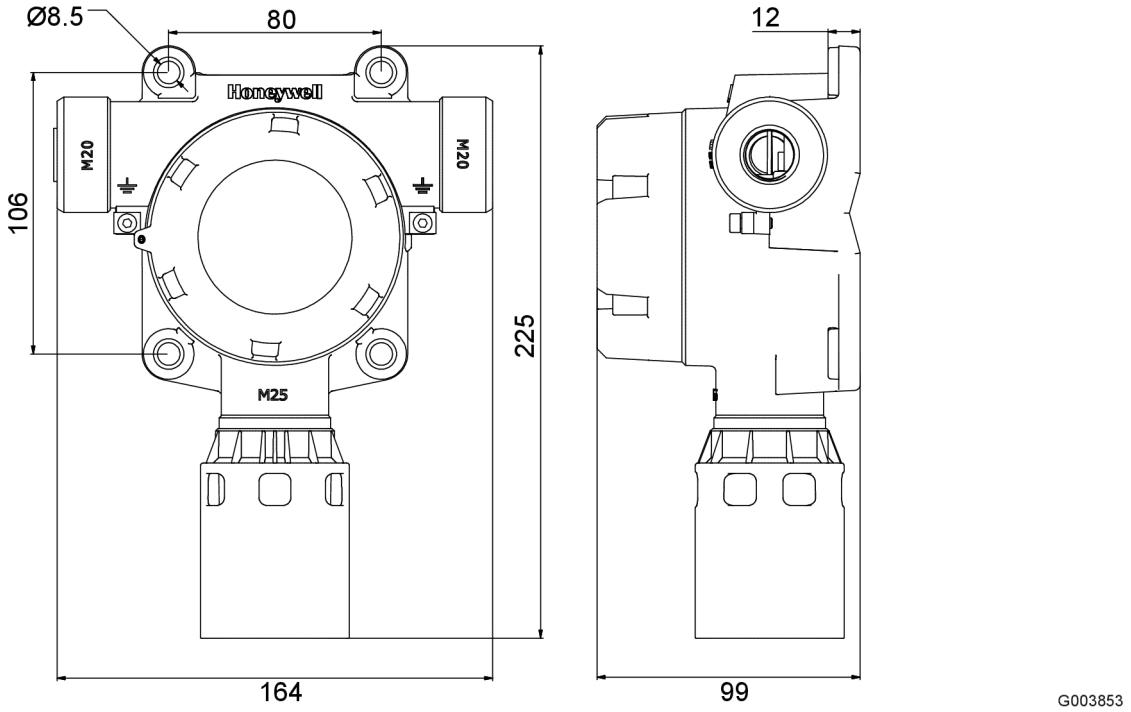

NORGREN

F22

Stainless Steel Filter
1/2 PTF

- **Designed for use in corrosive environments**
- **Metallic parts meet NACE† Standard MR-01-75***
- **Provides effective liquid removal and positive solid filtration**
- **Large filter element area for minimum pressure drop**
- **Automatic Drain is operated by liquid level and also opens upon depressurization**
- **Meets certain requirements of Military Specifications****

* National Association of Corrosion Engineers (NACE) MR-01-75 defines requirements for sulphide stress cracking resistant materials used in well-head and other corrosive environments.

** Meets certain requirements of MIL-S-901C (Navy) 15 Jan 1963: Military Specifications Shock Test H.I. (High Impact); Shipboard Machinery, Equipment and Systems and MIL-STD-167-1 (Ships) Military Standard Mechanical Vibrations of Shipboard Equipment.

Ordering Information. Model listed has PTF threads, automatic drain and 25 µm element.

Port Size	Model Number	Flow† scfm (dm^3/s)	Weight lbs (kg)
1/2 PTF	F22-405-A2DA	98 (46)	4.18 (1.88)

† Typical flow with 25 µm element at 90 psig (6.3 bar) inlet pressure, and 5 psig (0.35 bar) pressure drop.

Alternative Models

F 2 2 - ★ 0 ★ - ★ ★ D ★

Port Size	Substitute
1/2"	4
Special	6**

Modification	Substitute
1/8" thread auto-drain fitting	0
1/4" thread auto-drain fitting	5
Special	7**

Thread	Substitute
PTF	A
ISO G	D
Special	S**

Element	Substitute
5 µm	1
25 µm	2

Drain	Substitute
Automatic	A
Manual	M

** 3/4″ body (3/4 x 16 UNF) F22-**6**X**7**-XXX**S**

Please contact our technical service for details of non standard models.

ISO Symbols

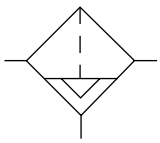

Automatic Drain

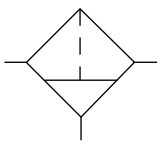

Manual Drain

See Section ALE-24 for Accessories

F22 Stainless Steel Filters

Technical Data

Fluid: Compressed air
Maximum pressure: 250 psig (17 bar)
Operating temperature: 0° to 175°F (-20° to 80°C) *
* Air supply must be dry enough to avoid ice formation at temperatures below 35°F (2°C).
Particle removal:
- 25 µm standard
- 5 µm optional

Air quality: Within ISO 8573-1, Class 3 and Class 5 (particulates)
Typical flow with 25 µm element at 90 psig (6.3 bar) inlet pressure, and 5 psig (0.35 bar) pressure droop: 98 scfm (46 dm³/s)
Automatic drain connection: Will fit 1/8-27 and 1/8-28 pipe thread
Automatic drain operating conditions (float operated):
- Bowl pressure required to close drain: Greater than 5 psig (0.3 bar)
- Bowl pressure required to open drain: Less than 3 psig (0.2 bar)
- Minimum air flow required to close drain: 2 scfm (1 dm³/s)
- Manual operation: Depress pin inside drain outlet to drain bowl

Nominal bowl size: 8 fluid ounce (0.24 liter)
Materials
- Body: Stainless steel
- Bowl: Stainless steel
- Element: Sintered stainless steel
- Elastomers: Synthetic rubber

Typical Performance Characteristics

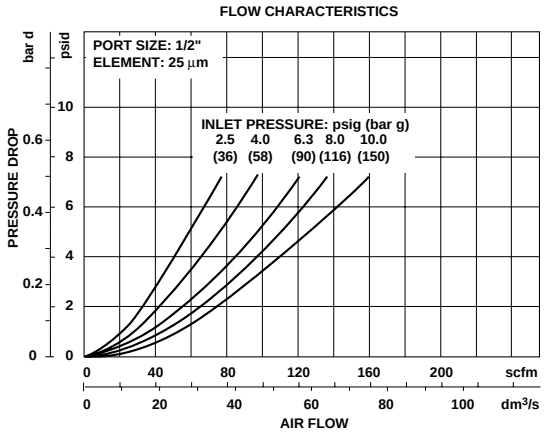

Service Kits

Item	Type	Part number
Service kits	25 µm, automatic drain	F22-100A
	5 µm, automatic drain	F22-100A(5)
	25 µm, manual drain	F22-100M
	5 µm, manual drain	F22-100M(5)
Replacement drains	Automatic	3000-87
	Manual	2273-18
Service kit	Orientable metal bowl	5860-RK

Service kits include o-rings, gaskets, specified filter elements, drain strainer and strainer cap.

All Dimensions in Inches (mm)

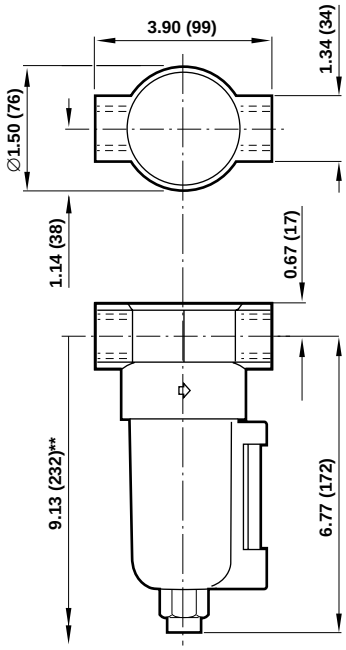

Automatic Drain

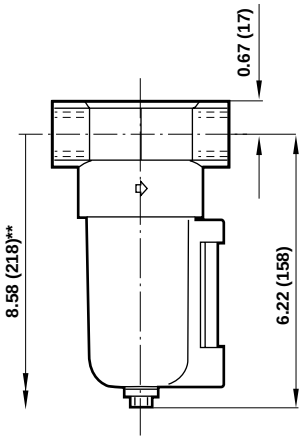

Manual Drain

**Minimum clearance required to remove bowl

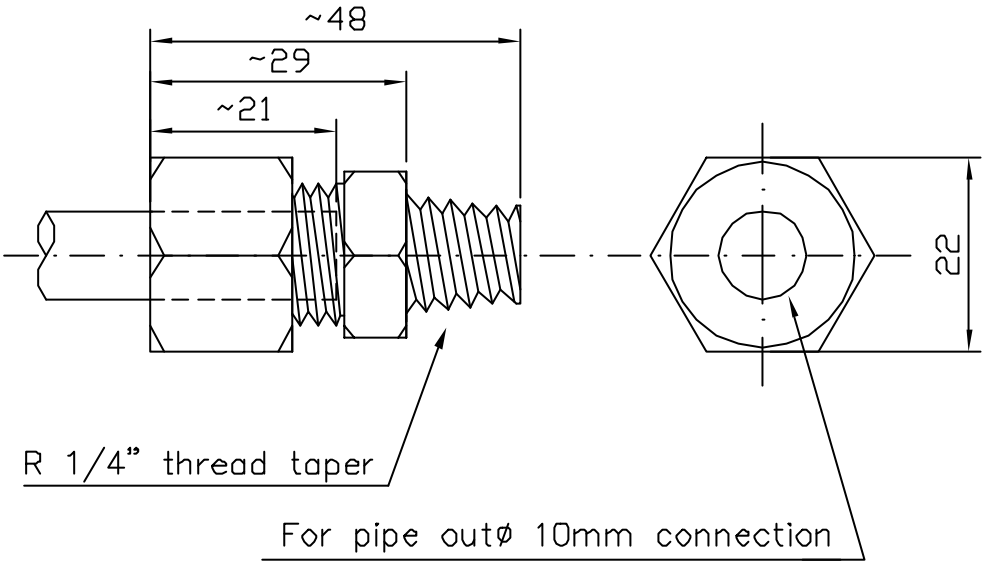

Project: SALWICO GAS DETECTION SYSTEM			COUPLING SUS 10mm–1/4"
File: S–4–010.838.dwg	Size A4	Scale 1:1	DIMENSION DRAWING
Consilium Göteborg, Sweden www.consilium.se	Design TF	Approved	CONSILIUM ART. NO.: 4258
Copyright Consilium Marine AB	Date: 02–07–2003	Drawing no. S–4–010.838	Ver. A / Page 1 / 1

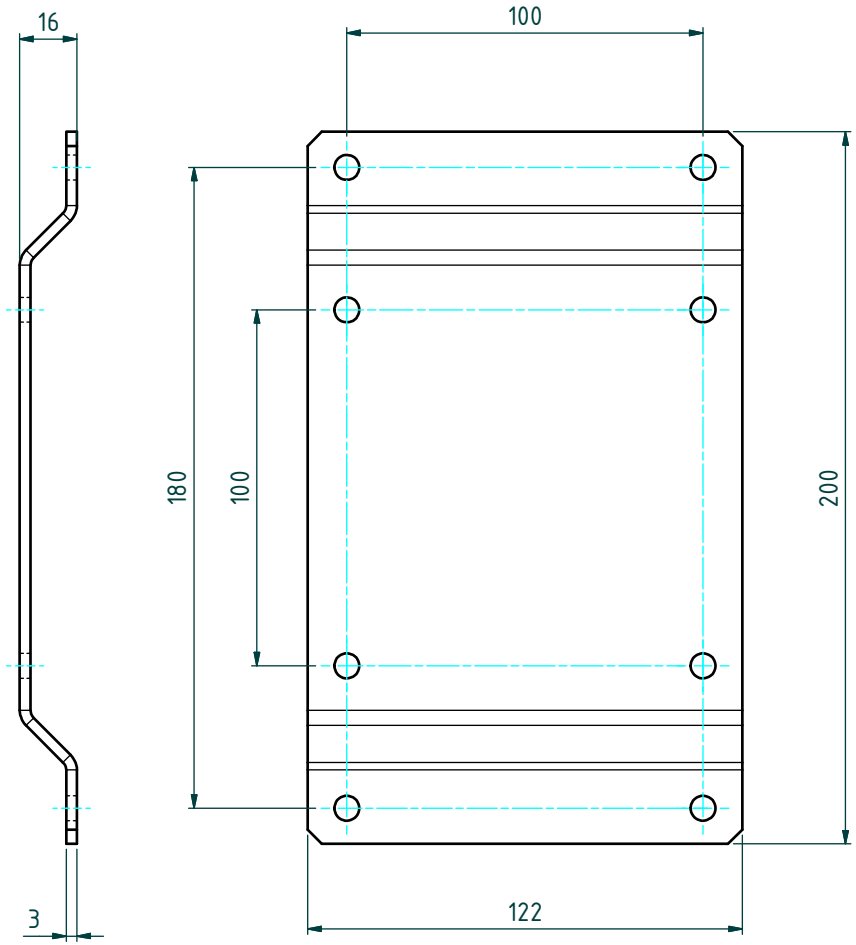

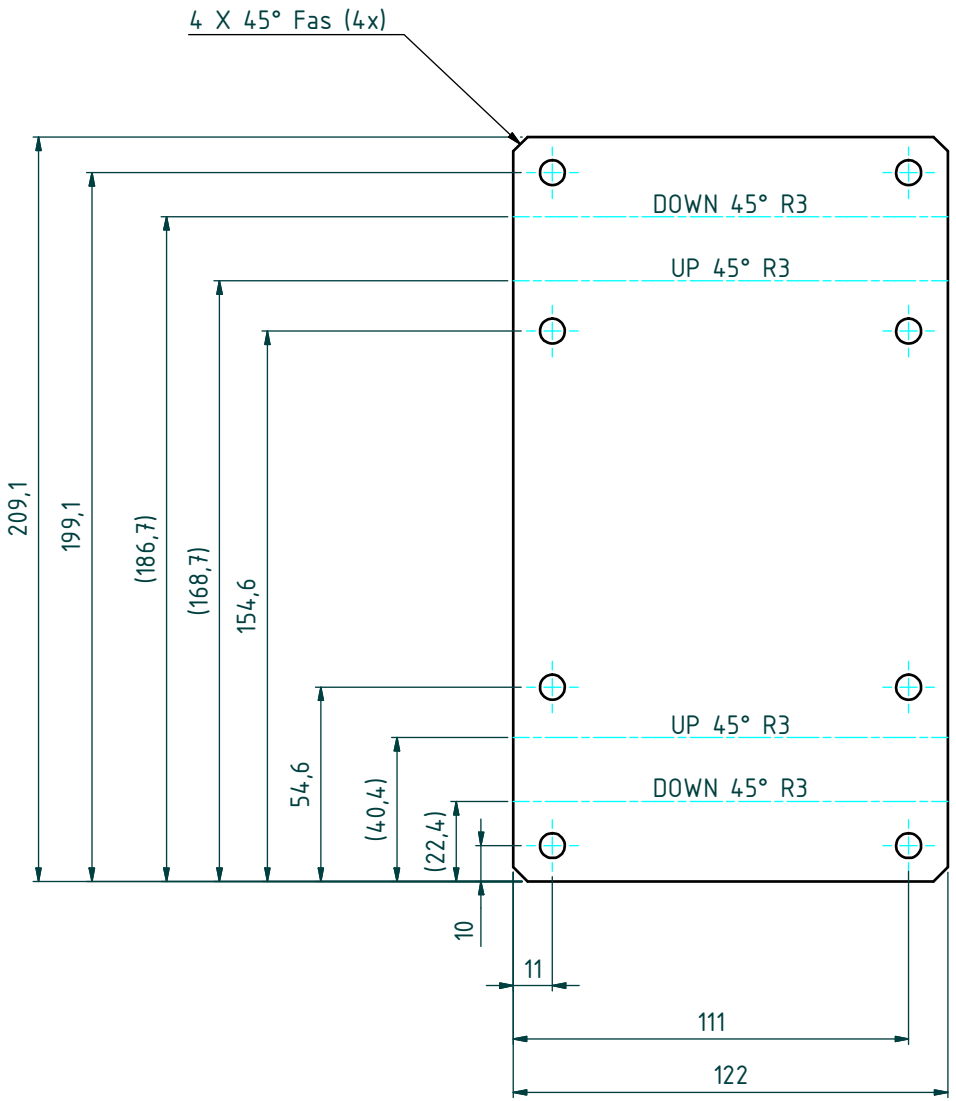

Material: Aluzink, SS1151-90 AZ150
alt galv steel or equivalent

Thickness: 3mm

General tolerances according to:
ISO2768-1c

Item #	Drawing no.	Part no.	Qty	Description

File: 6300859_Mounting bracket For Salwico True IR.dwg

Project: GS3000

Consilium
Göteborg, Sweden
www.consilium.se
Copyright Consilium

Size	Scale
A3	1:1,5
Design	Approved
ONO	

Preliminary

Date: 2012-03-02

Mounting bracket For Salwico True IR
GS3000

Drawing no. 6300859

Rev. A01

Page 1 / 1

Rev.	Revision note	Date	Sign.	Appr.

NORGREN

F05G
General purpose
Miniature stainless steel filters
1/4" PTF

316 Stainless Steel Construction for use in corrosive environments

General purpose filters protect devices by removing liquid and solid contaminants

Screw on bowl reduces maintenance time

Can be disassembled without the use of tools or removal from air line

Metallic parts meet NACE standard MR-01-75*

* National Association of Corrosion Engineers (NACE) MR-01-75) defines requirements for sulphide stress cracking resistant materials used in well-head and other corrosive environments.

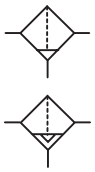

Technical features

Medium:
Compressed air or neutral gases
Other media on request
Operating pressure:
20 bar max
Element:
5 or 40 µm

Typical flow:
see below
Nominal bowl size
31ml
Drain connection:
Manual:No Tube Connection
Auto: will fit 1/8"-27 and 1/8"-28 pipe threads

Fluid/Ambient temperature:
-25 ... +79°C
Air supply must be dry enough to avoid ice formation at temperatures below +2°C.

Materials
Body, bowl: 316 Stainless Steel
Element: Sintered Polypropylene
Elastomers: Fluorocarbon
Manual drain: Acetal or 316 Stainless Steel
Automatic drain: 316 Stainless Steel

Technical data, standard models

Symbol	Port size	Operating pressure max (bar)	Flow * (dm^3/s)	Element (µm)	Drain type material	Element kit (µm)	Weight (kg)	Model
	1/4 PTF	20	6	40	Manual (stainless steel)	3653-28 *1)	0,96	F05G-2AN-DM3
	1/4 PTF	20	6	40	Manual (Acetal)	3653-28 *1)	0,96	F05G-2AN-MM3
	1/4 PTF	20	6	40	Automatic (stainless steel)	3653-28 *1)	0,96	F05G-2AN-AM3

* Typical flow with 10 bar inlet pressure and 0,35 bar pressure drop
*1) 5 µm element kit: 3653-27

Option selector

F05G-2AN-★M★

Drain	Substitute
Automatic (stainless steel)	A
Manual (Acetal)	M
Manual (stainless steel)	D

Element	Substitute
5 µm	1
40 µm	3

Typical performance characteristics
Element: 40 µm

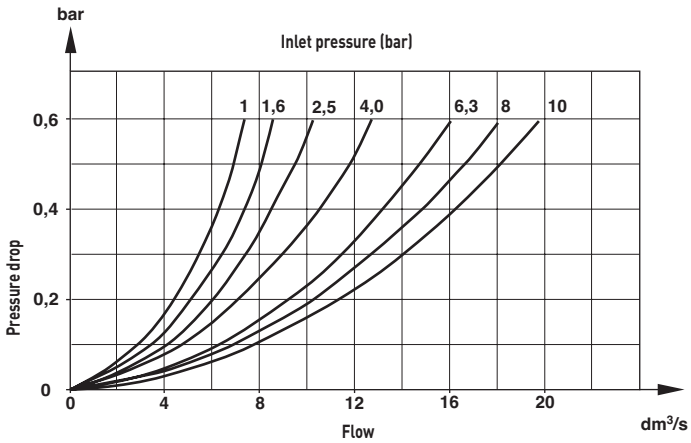

Our policy is one of continued research and development. We therefore reserve the right to amend, without notice, the specifications given in this document.

NORGREN

F05G

Dimensions

Manual drain Acetal

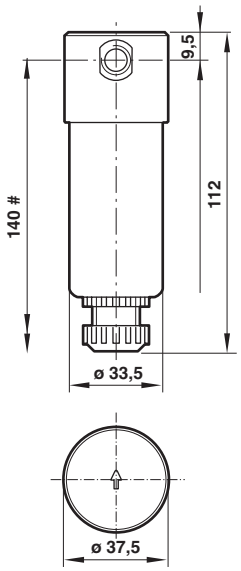

Manual drain Stainless steel

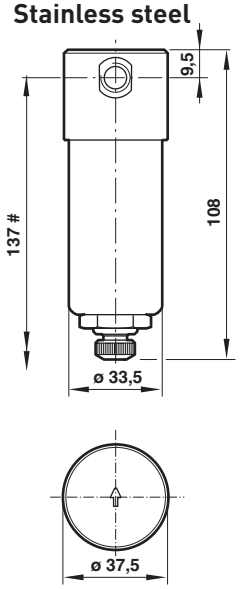

Automatic drain Stainless steel

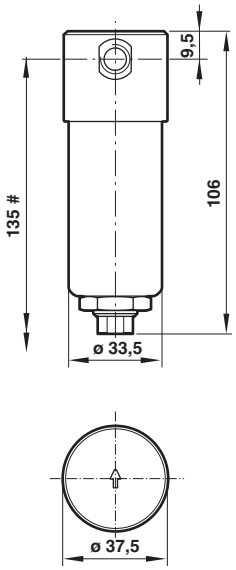

Minimum clear distance required to remove bowl.

Warning

These products are intended for use in industrial compressed air systems only. Do not use these products where pressures and temperatures can exceed those listed under **»Technical features«**.

Before using these products with fluids other than those specified, for non-industrial applications, life-support systems, or other applications not within published specifications, consult NORGREN.

Through misuse, age, or malfunction, components used in fluid power systems can fail in various modes.

The system designer is warned to consider the failure modes of all component parts used in pneumatic systems and to provide adequate safeguards to prevent personal injury or damage to equipment in the event of such failure.
System designers must provide a warning to end users in the system instructional manual if protection against a failure mode cannot be adequately provided.
System designers and end users are cautioned to review specific warnings found in instruction sheets packed and shipped with these products.

Our policy is one of continued research and development. We therefore reserve the right to amend, without notice, the specifications given in this document.

NORGREN

F05C
Oil Removal (coalescing)
Miniature stainless steel filters
1/4" PTF

316 Stainless Steel Construction for use in corrosive environments

Coalescing filters remove oil and particles down to 0,01 µm

Screw on bowl reduces maintenance time

Can be disassembled without the use of tools or removal from air line

Metallic parts meet NACE standard MR-01-75*

* National Association of Corrosion Engineers (NACE) MR-01-75) defines requirements for sulphide stress cracking resistant materials used in well-head and other corrosive environments.

Technical features

Medium:
Compressed air or neutral gases
Other media on request
Operating pressure:
20 bar max
Air quality:
Within ISO 8573-1, Class 1 particulates and oil content

Maximum remaining oil content of air leaving the filter:
0.01ppm at 21°C with an inlet oil concentration of 17 ppm.
Element:
Down to 0,01µm
Typical flow:
see below
Nominal bowl size:
31ml

Drain connection:
No tube connection
Fluid/Ambient temperature:
-25 ... +79°C
Air supply must be dry enough to avoid ice formation at temperatures below +2°C.

Materials:
Body, bowl: 316 Stainless Steel
Element: Synthetic Fiber Polyurethane Foam
Elastomers: Fluorocarbon
Manual drain: Acetal or 316 Stainless Steel

Technical data, standard models

Symbol	Port size	Operating pressure max (bar)	Dry flow * (dm^3/s)	Saturated flow (dm^3/s)	Element	Drain type (material)	Element kit Coalescing	Weight kg	Model
	1/4 PTF	20	2,7	3,0	Coalescing	Manual (stainless steel)	4140-14	0,96	F05C-2AN-DM0
	1/4 PTF	20	2,7	3,0	Coalescing	Manual (Acetal)	4140-14	0,96	F05C-2AN-MM0

* Typical flow with 6,3 bar inlet pressure and 0,35 bar pressure drop

Typical performance characteristics
Element: saturated

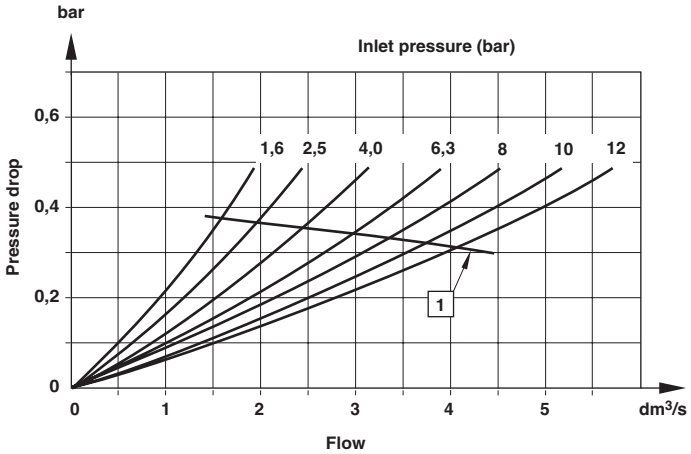

Element: dry

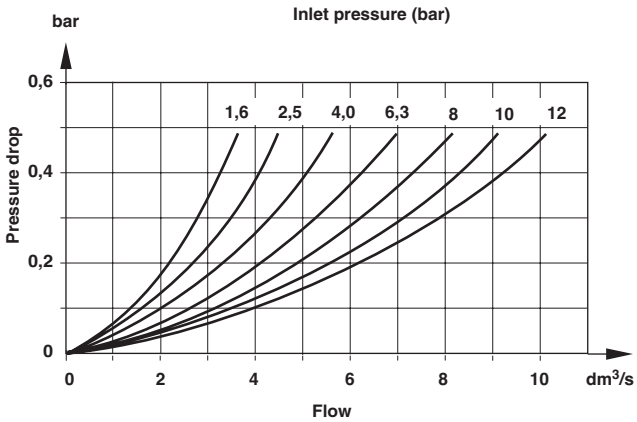

1 Maximum flow to maintain stated oil removal performance

Our policy is one of continued research and development. We therefore reserve the right to amend, without notice, the specifications given in this document.

NORGREN

F05C

Dimensions

Manual drain
Acetal

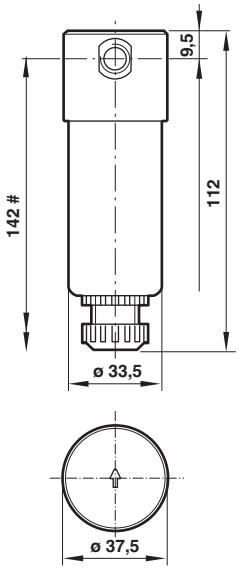

Manual drain
S0tainless steel

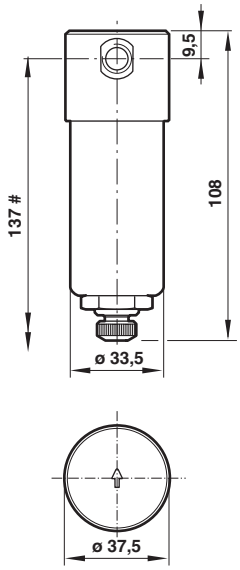

Minimum clear distance required to remove bowl.

Warning

These products are intended for use in industrial compressed air systems only. Do not use these products where pressures and temperatures can exceed those listed under **»Technical features«**.

Before using these products with fluids other than those specified, for non-industrial applications, life-support systems, or other applications not within published specifications, consult NORGREN.

Through misuse, age, or malfunction, components used in fluid power systems can fail in various modes.

The system designer is warned to consider the failure modes of all component parts used in pneumatic systems and to provide adequate safeguards to prevent personal injury or damage to equipment in the event of such failure.
System designers must provide a warning to end users in the system instructional manual if protection against a failure mode cannot be adequately provided.
System designers and end users are cautioned to review specific warnings found in instruction sheets packed and shipped with these products.

Our policy is one of continued research and development. We therefore reserve the right to amend, without notice, the specifications given in this document.

Consilium Marine

2013-04-10 YSN/WYL

SCOPE OF SUPPLY LIST

Product Salwico Gas Sampling System

Our Ref. No. SG-28567

Shipyard Samsung Heavy Ind. Co. LTD.
530, Jangpyung-Ri, Shinhyun-up
P.O. Box Go Hyun 9
Koje-city, Kyungnam
REP. OF KOREA

NB H 2074

Item	Description	Q´ty
1	SW2020 analyzing unit in floor standing cabinet 1900x800x400 together with control unit, including: - 35 external measuring points and 1 internal for leakage control. - Flame arrestors located at the side of the cabinet. - Pipe cleaning arrangement. - Transport 15L/min and measuring pump 15L/min. - The first pump is backup if the second pump fails. - Automatic pump stop function, in case of flow failure (e.g. due to clogged pipe) suction from that pipe will automatically be stopped and blow-back will be performed. Suction will be resumed when pipe is clean - Solenoid valves, filter, vacuum guards, pressure guards and flow meter mounted in the cabinet. - Water filter with automatic drainage. - 2 Detectors for Methane 0-100% LEL, infrared type Optima Plus(Salwico GD FH True IR). One is working as standby - 2 Detectors for Methane 0-100% VOL, infrared type Optima Plus(Salwico GD FH True IR). One is working as standby - Built-in test gas bottle with manometer and pressure regulator. One for % LEL and one for %Vol. - 2x230 VAC input, auto switch. - Relay output when internal measuring point detects gas (30%LEL) inside cabinet. Yard to arrange power shutdown outside cabinet, acc. to owner request. - Relay output activated when 60% LEL in cargo machinery room. - Common failure, warning and alarm outputs. - RS485 output for communication with MN400 repeater. - Communication via Salwico GDS with Modbus to IAS system	1pc
	SW2020 control unit, ME400, in floor standing cabinet together with analyzing unit, including: - Alphanumeric display showing alarm level and supplementary text for each point - Individual setting of sampling time for each point - Individual setting of low and high alarm levels for each point - One low and one high alarm level for each gas detector, total 4 levels. - Manual override for scanning of any desired measuring point - Free scanning sequence of the sampling points (e.g. 1, 2, 6, 3, 7 etc.) - Disconnection by timer, in ME400, can be made for any measuring point(s) - Individual alarm and fault indication, buzzer, mute and lamp test - Listing of gas alarms (alarms in queue), faults and disconnections - Test, calibration etc is all done via the control unit.	1pc
2	Repeater panel: - 4259700, Repeater panel MN400 console mounted	2pcs

2013-04-10 YSN/WYL

3	Bulkhead penetration details:	
	- 4233, Ball valve 1/4” – 1/4”, SUS316	36pcs
	- 4259, Couplings for 1/4” – 8 mm pipe, SUS316	35pcs
	- 4261, Couplings for 1/4” – 12 mm pipe, SUS316	2pcs
4	On line Filters with 2x couplings:	
	- 4227, On line filters, SUS316	32pcs
	- 4259, Couplings for 1/4” – 8 mm pipe, SUS316	64pcs
5	Moisture separator for escape/observation tank SP:	
	- 7316, Water-filter, 1/4”, SUS316	3pcs
	- 4233, Ball valve 1/4” - 1/4”, SUS316	3pcs
	- 4234, Nipple 1/4” - 1/4”, SUS316	3pcs
	- 4259, Coupling, 1/4” – 8mm pipe, SUS316	6pcs

CABINET COLOUR: Munsell 7.5BG 7/2

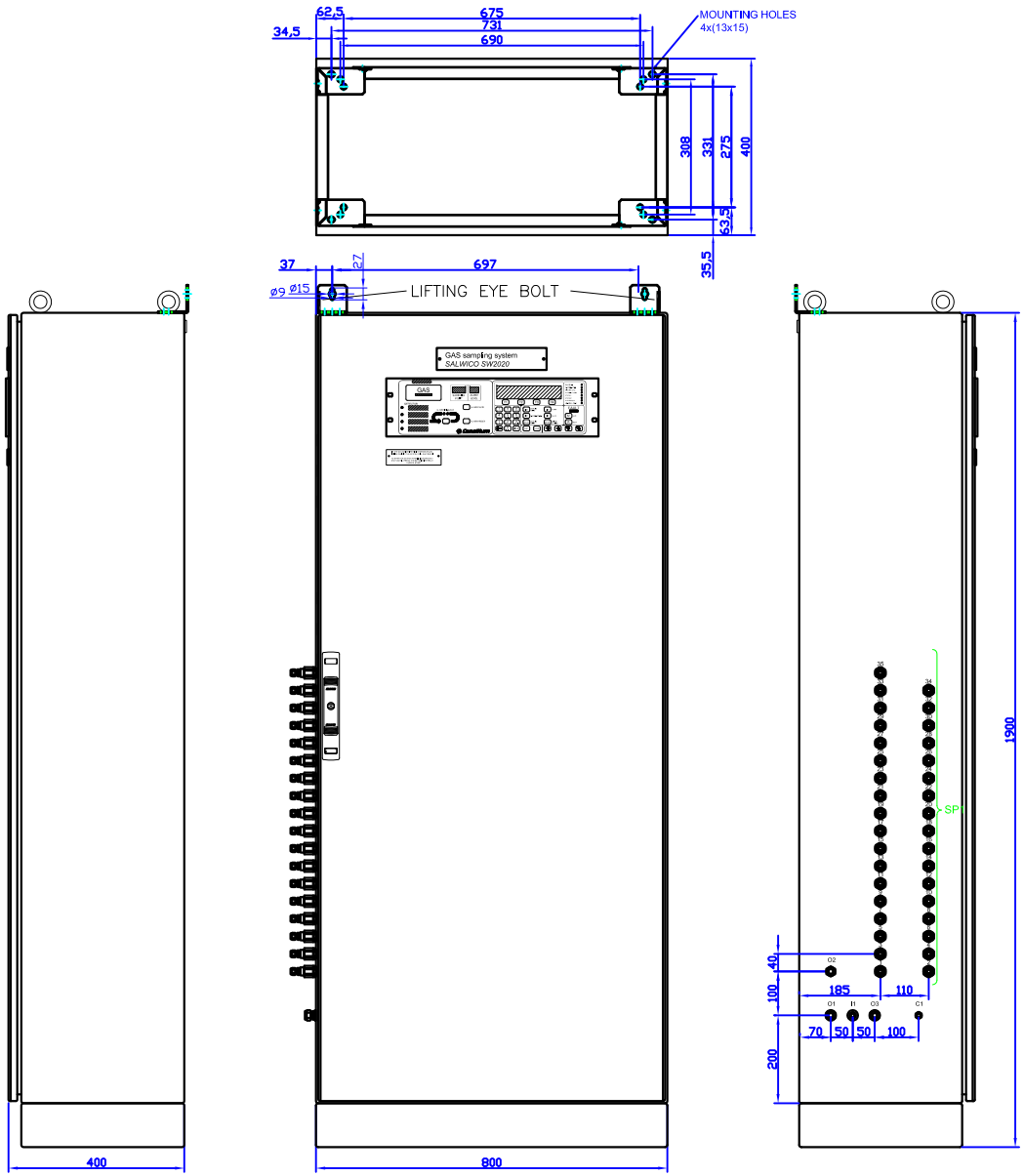

C1: DRY INSTRUMENT AIR INLET 5-16kP/cm
PIPE OUT. DIA. 8mm

I1: INLET FOR FRESH AIR
PIPE OUT. DIA. 8mm

O1: MEASURING GAS OUTLET
FLAME TRAPS MOUNTED INSIDE THE CABINET
PIPE OUT. DIA. 12mm

O2: WATER FILTER OUTLET
PIPE OUT DIA. 8mm
PIPE MUST LEAD DOWNWARDS TO A FLOOR WELL

SP1: MEASURING GAS SAMPLING POINTS
FLAME TRAP CONNECTION
PIPE OUT. DIA. 8mm

DETECTORS:

- ONE METHANE IR DET 0-100%VOL
- ONE METHANE IR DET 0-100%VOL (SPARE)

- ONE METHANE IR DET 0-100%LEL
- ONE METHANE IR DET 0-100%LEL (SPARE)

TECHNICAL DATA:

- AUTOMATIC SHUTDOWN OF THE SYSTEM AT 30%LEL HC INSIDE THE CABINET
- TWO PUMP SYSTEM (REDUNDANCY)
- POWER SUPPLY: 230VAC
- MAX. POWER CONSUMPTION: 1300W
- WEIGHT: APPROX. 195KG

DIMENSIONS

File: SG28567			SHI
Project: SG28567	Size A3-4	Scale 1:12	H2074
Consilium Göteborg, Sweden www.consilium.se	Design YSN	Approved WYL	GAS SAMPLING SYSTEM SALWICO SW2020
	Date: 10.04.13	Drawing no. 001	Ver. – / Page 1 / 1

Copyright Consilium Marine AB

Rev.	Revision note	Date	Sign.
–			

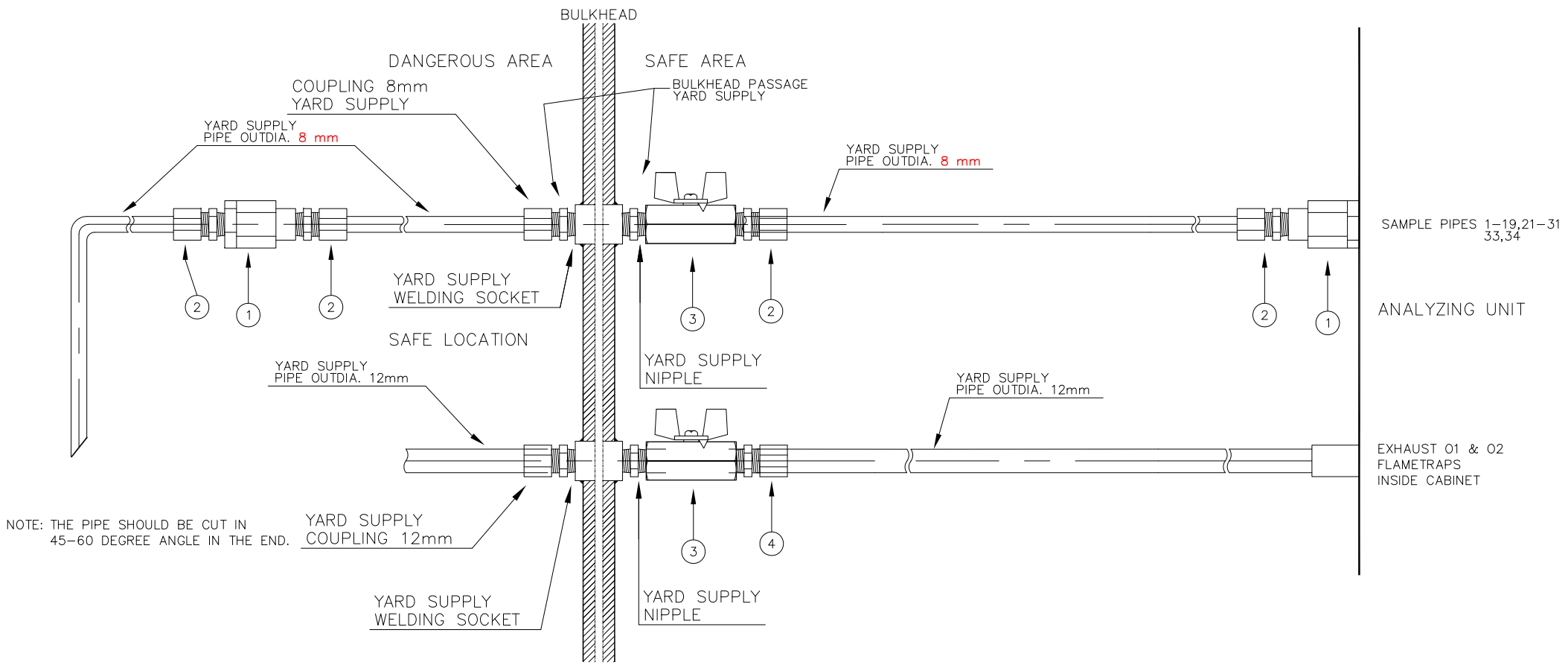

SAMPLING POINT DETAILS

Item no.	Part no.	Matrl	Description
1	004227	SUS	FLAME TRAP/ON–LINE FILTER
2	004259	SUS316	COUPLING FOR 1/4"–8mm
3	004233	SUS316	SHUT OFF VALVE, BALL VALVE 1/4"–1/4"
4	004261	SUS316	COUPLING FOR 1/4"–12mm

RECOMMENDED PIPE CONNECTIONS BY CONSILIUM

Rev.	Revision note	Date	Sign.
–			

File: SG28567
Project: SG28567

Consilium
Göteborg, Sweden
www.consilium.se
Copyright Consilium Marine AB

Size	Scale
A3–4	NTS
Design	Approved
YSN	FA
Date: 10.04.13	

H2074
SHI

SALWICO SW2020 GAS SAMPLING SYSTEM

Drawing no.	Ver.	Page
002	–	1 / 2

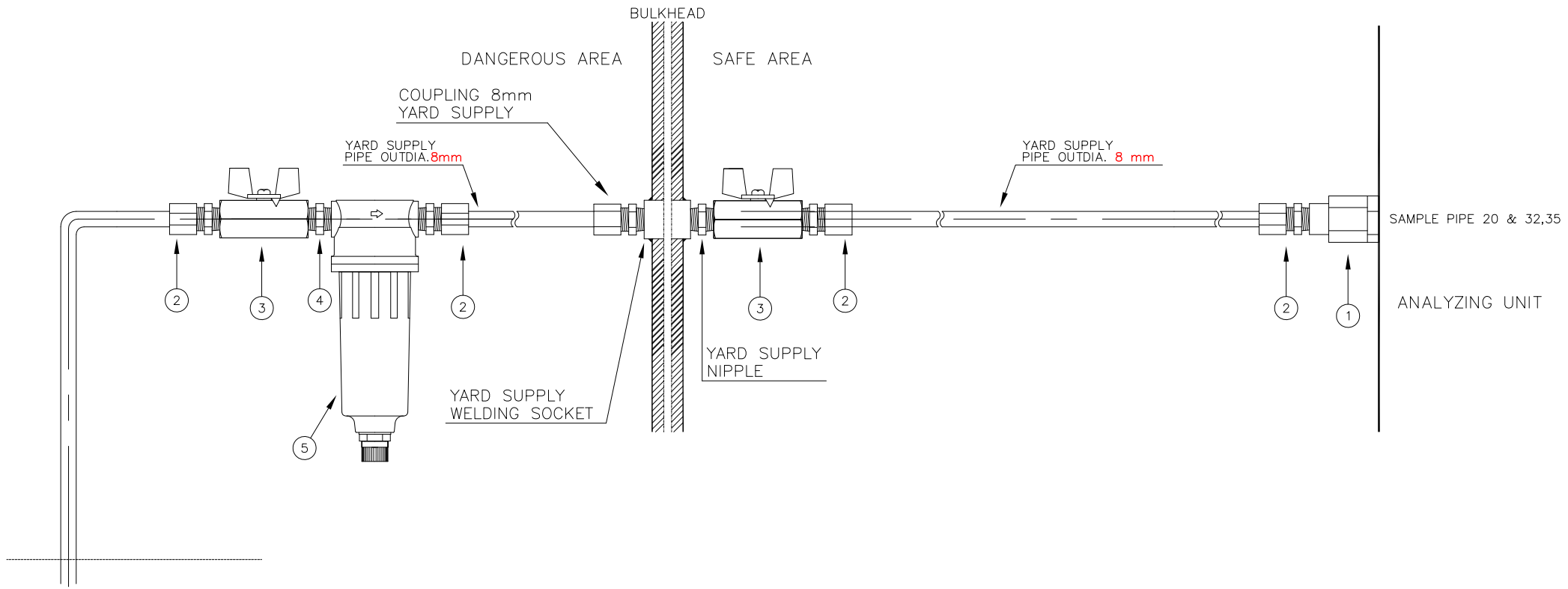

GAS VENT DRAIN TANK
& DEGASING TANK

SAMPLING POINT DETAILS

Item no.	Part no.	Matrl	Description
1	004227	SUS	FLAME TRAP/ON-LINE FILTER
2	004259	SUS316	COUPLING FOR 1/4"-8mm
3	004233	SUS316	SHUT OFF VALVE, BALL VALVE 1/4"-1/4"
4	004234	SUS316	NIPPLE 1/4"-1/4"
5	007316	SUS316	WATER AND DUST FILTER

RECOMMENDED PIPE CONNECTIONS BY CONSILIUM

Rev.	Revision note	Date	Sign.
–			

File: SG28567
Project: SG28567

Consilium
Göteborg, Sweden
www.consilium.se
Copyright Consilium Marine AB

Size	Scale
A3-4	NTS
Design	Approved
YSN	WYL
Date: 10.04.13	

H2074
SHI

SALWICO SW2020 GAS SAMPLING SYSTEM

Drawing no.	Ver.	Page
003	–	2 / 2

SW2020 CONTROL AND ANALYSING UNIT IN FLOORSTANDING CABINET

MAX CONTACT LOAD: 5A 250VAC/24VDC

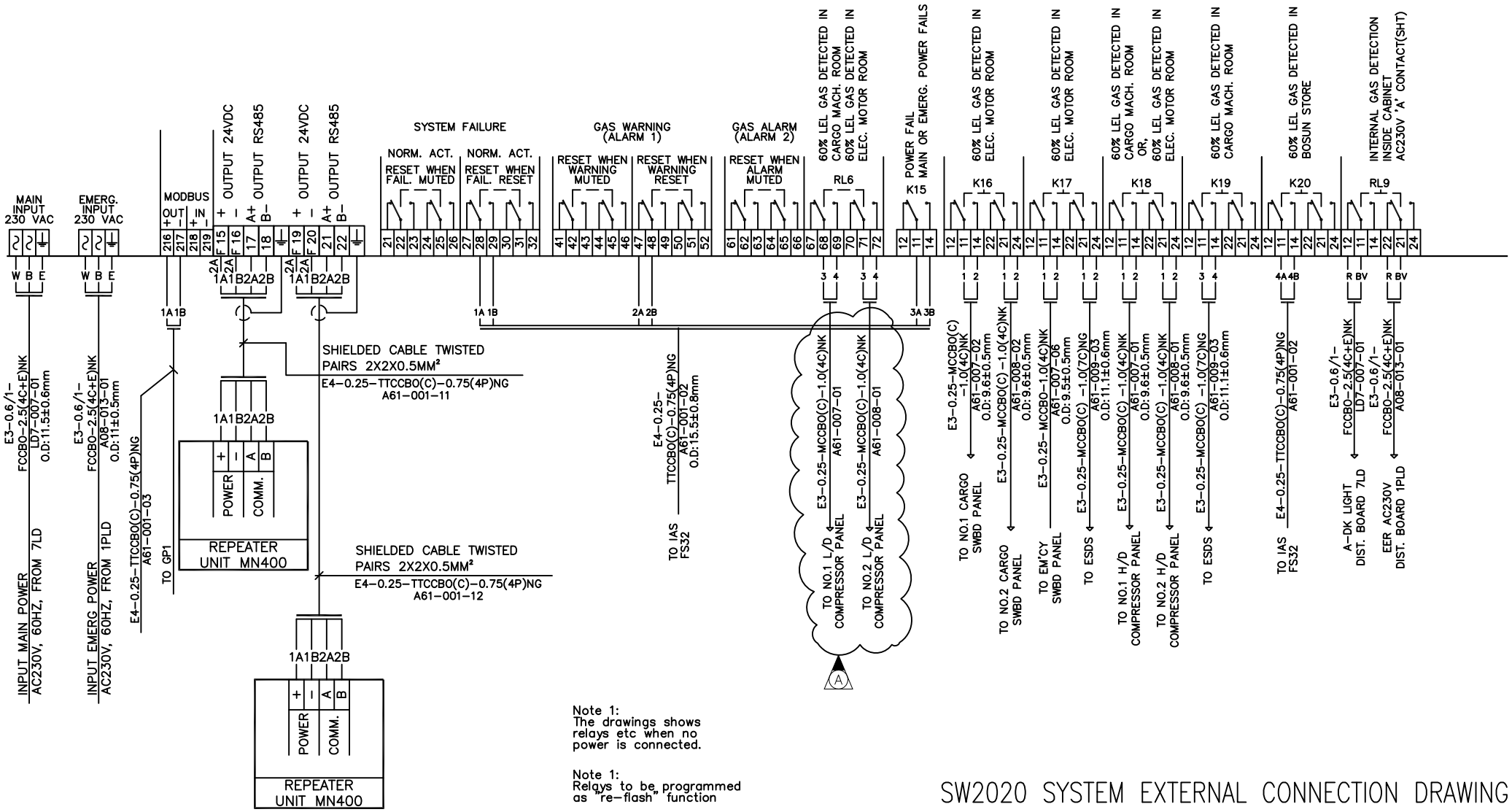

Note 1:
The drawings shows relays etc when no power is connected.

Note 1:
Relays to be programmed as "re-flash" function

SW2020 SYSTEM EXTERNAL CONNECTION DRAWING

File: SG28567			H2074
Project: SG28567	Size A3-4	Scale NTS	SHI
Consilium, Göteborg, Sweden, www.consilium.se	Design YSN	Approved WYL	SALWICO SW2020 GAS SAMPLING SYSTEM
Copyright Consilium Marine AB	Date: 10.04.13		Drawing no. 004 · Ver. A · Page 1 / 1

Rev.	Revision note	Date	Sign.
A	REVISED ACC. TO YARD COMMENT	130822	YSN

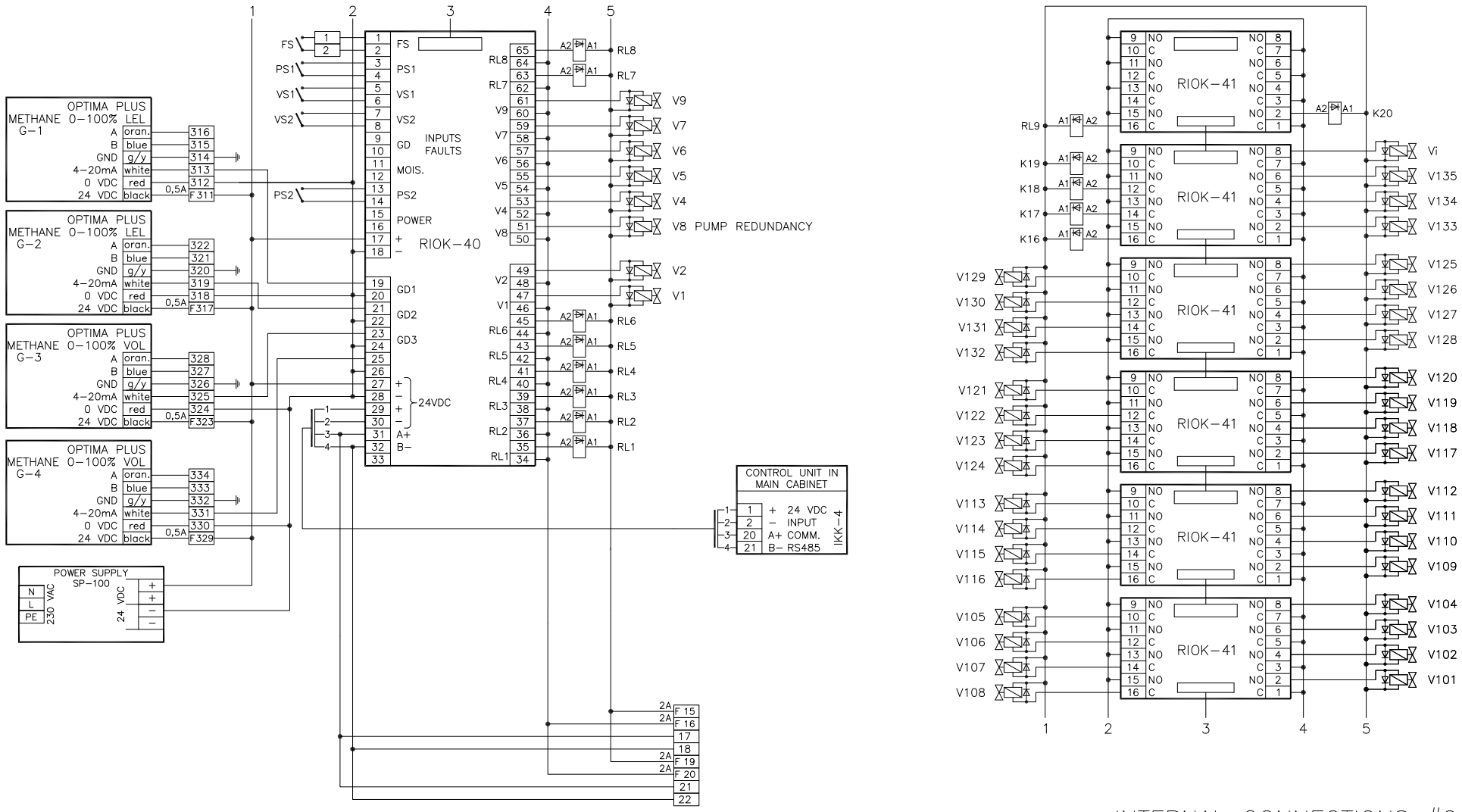

INTERNAL CONNECTIONS #2 (WBT)

File: SG28567			SHI
Project: SG28567	Size A3–4	Scale NTS	H2074
Consilium Göteborg, Sweden www.consilium.se	Design YSN	Approved FA	GAS SAMPLING SYSTEM SALWICO SW2020
Copyright Consilium Marine AB	Date: 10.04.13	Drawing no. 005	Ver. – / Page 1 / 1

Rev.	Revision note	Date	Sign.

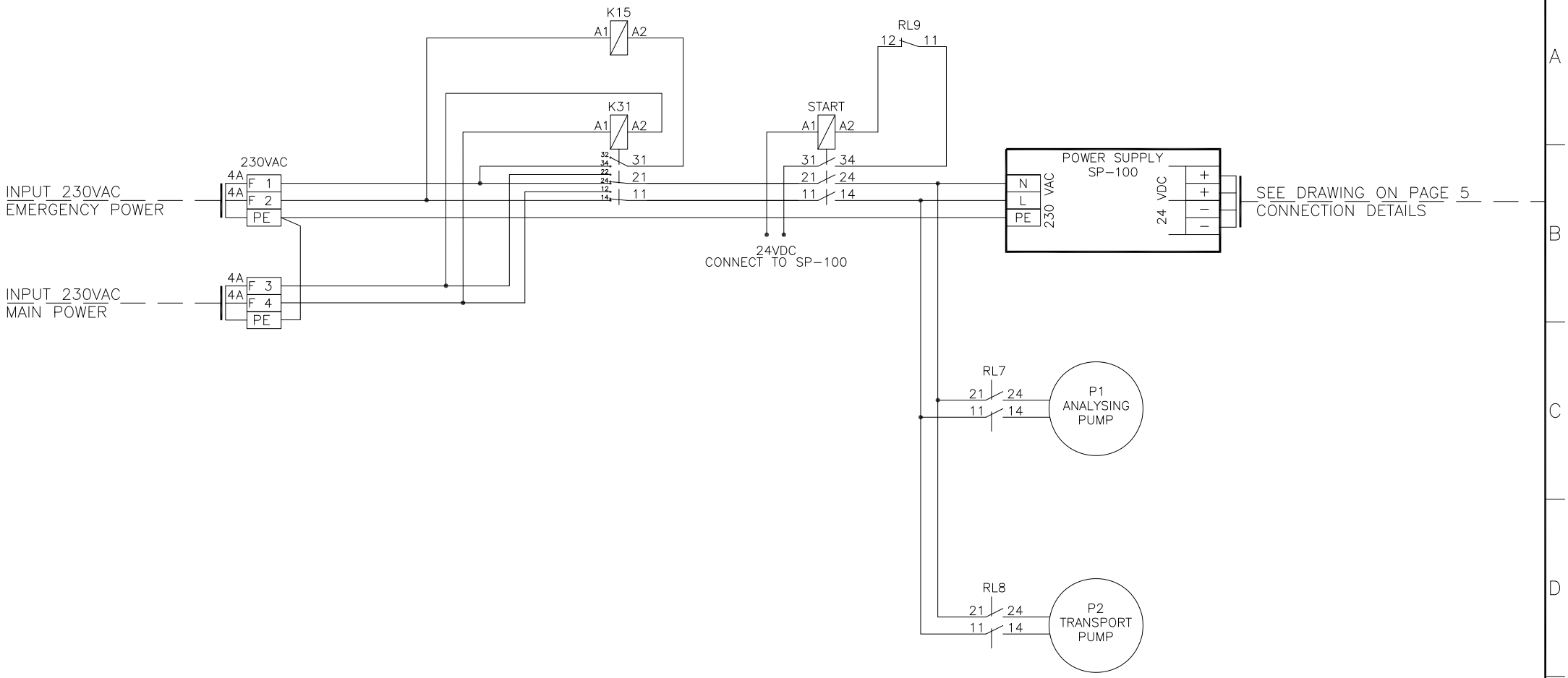

INTERNAL CONNECTIONS #3 (PWR SUPPLY)

File: SG28567			H2074
Project: SG28567	Size A3-4	Scale NTS	SHI
Consilium Göteborg, Sweden www.consilium.se	Design YSN	Approved YSN	SALWICO SW2020 GAS SAMPLING SYSTEM
Copyright Consilium Marine AB	Date: 10.04.13		Drawing no. 006 / Ver. – / Page 1 / 1

Rev.	Revision note	Date	Sign.
–			

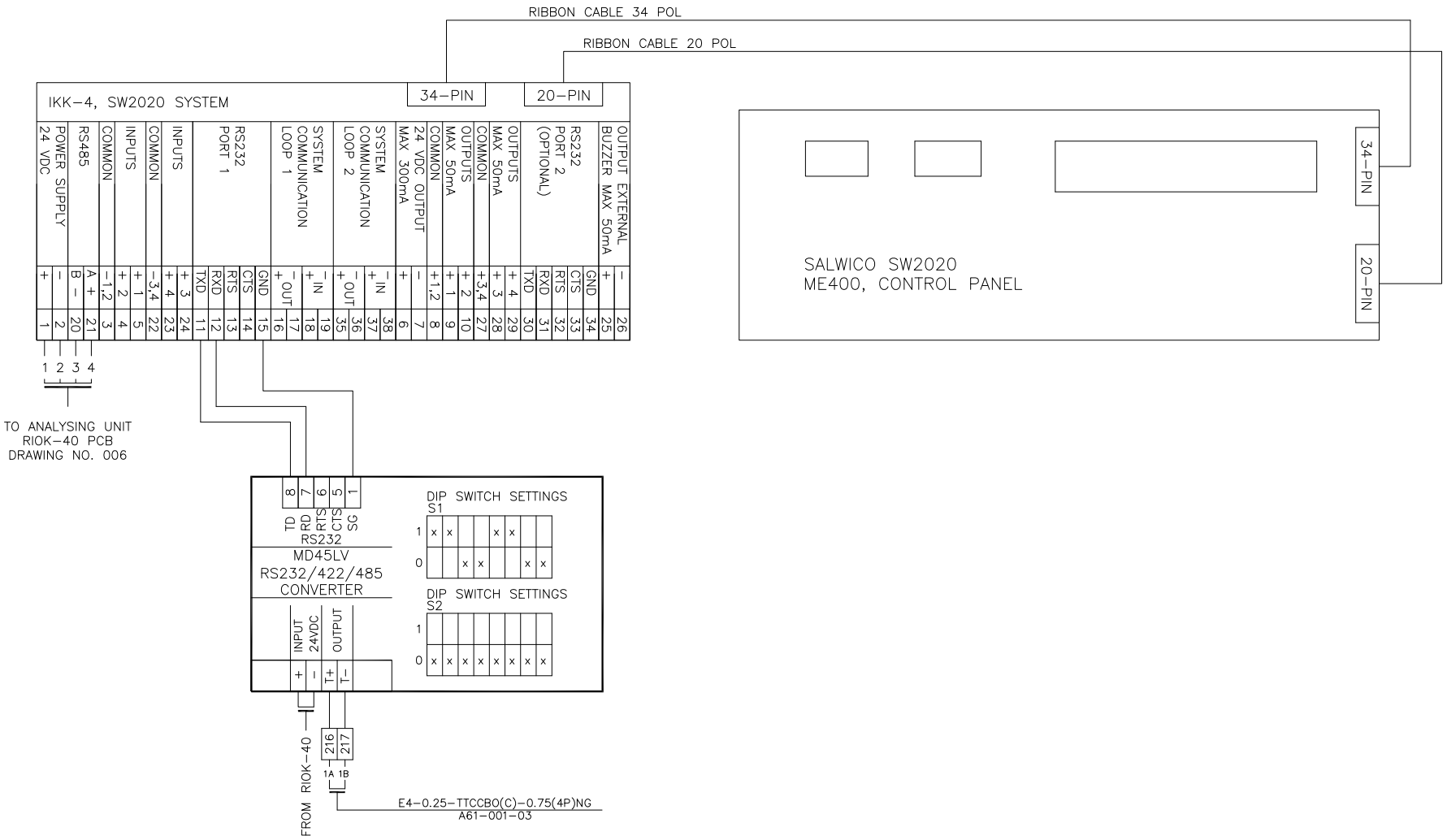

INTERNAL CONNECTIONS #4 (CTRL. PANELS)

File: SG28567			H2074
Project: SG28567	Size A3-4	Scale NTS	SHI
Consilium Göteborg, Sweden www.consilium.se	Design YSN	Approved WYL	SALWICO SW2020 GAS SAMPLING SYSTEM
Copyright Consilium Marine AB	Date: 10.04.13	Drawing no. 007	Ver. – / Page 1 / 1

Rev.	Revision note	Date	Sign.
–			

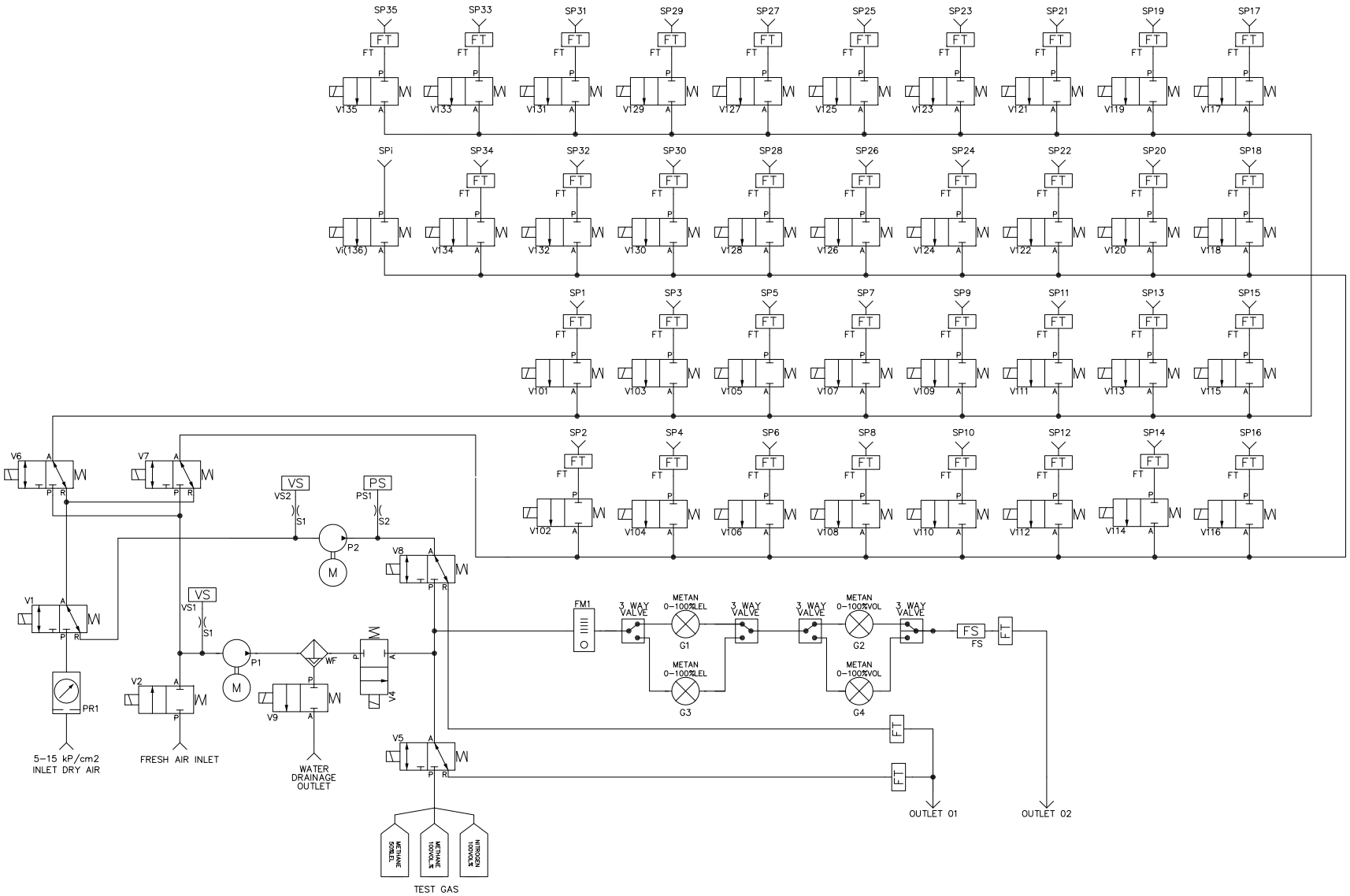

File: SG28567			SHI
Project: SG28567	Size A3–4	Scale NTS	H2074
Consilium Göteborg, Sweden www.consilium.se Copyright Consilium Marine AB	Design YSN	Approved WYL	GAS SAMPLING SYSTEM SALWICO SW2020
	Date: 10.04.13		Drawing no. 008 · Ver. – · Page 1 / 1

Rev.	Revision note	Date	Sign.
–			

WALL MOUNTED (WITH FRAME)

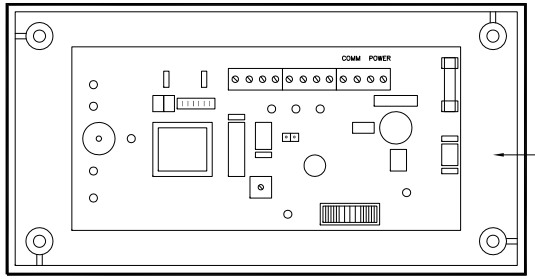

BACK SIDE OPEN FOR CABLE INLET

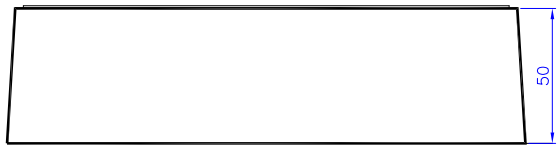

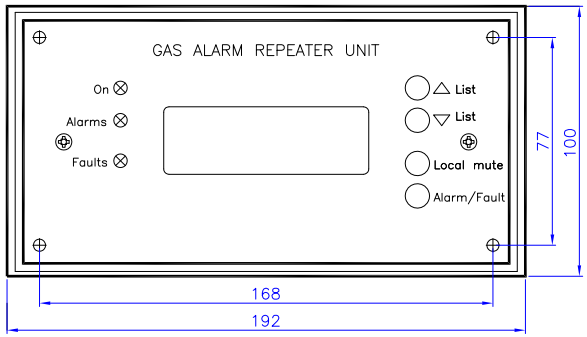

CONSOLE/FLUSH MOUNTED (WITHOUT FRAME)

NOTE:
THE ONLY DIFFERENCE BETWEEN WALL AND CONSOLE MOUNTED REPEATER IS THE FRAME. WHEN CHANGING FROM WALL TO CONSOLE JUST REMOVE THE FRAME.

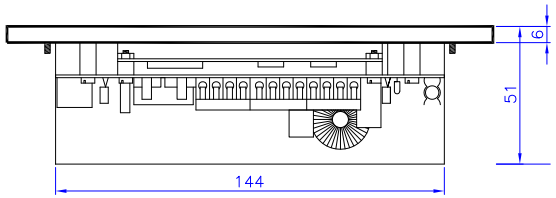

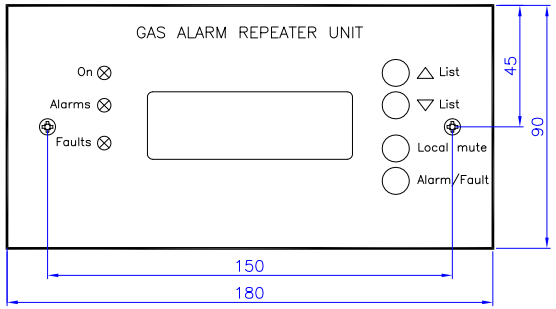

WALL/CONSOLE MOUNTED MN400 REPEATER

File: SG28567			SHI
Project: SG28567	Size A3-4	Scale NTS	H2074
Consilium Göteborg, Sweden www.consilium.se	Design YSN	Approved WYL	GAS SAMPLING SYSTEM SALWICO SW2020
	Date: 10.04.13	Drawing no. 009	Ver. – / Page 1 / 1

Copyright Consilium Marine AB

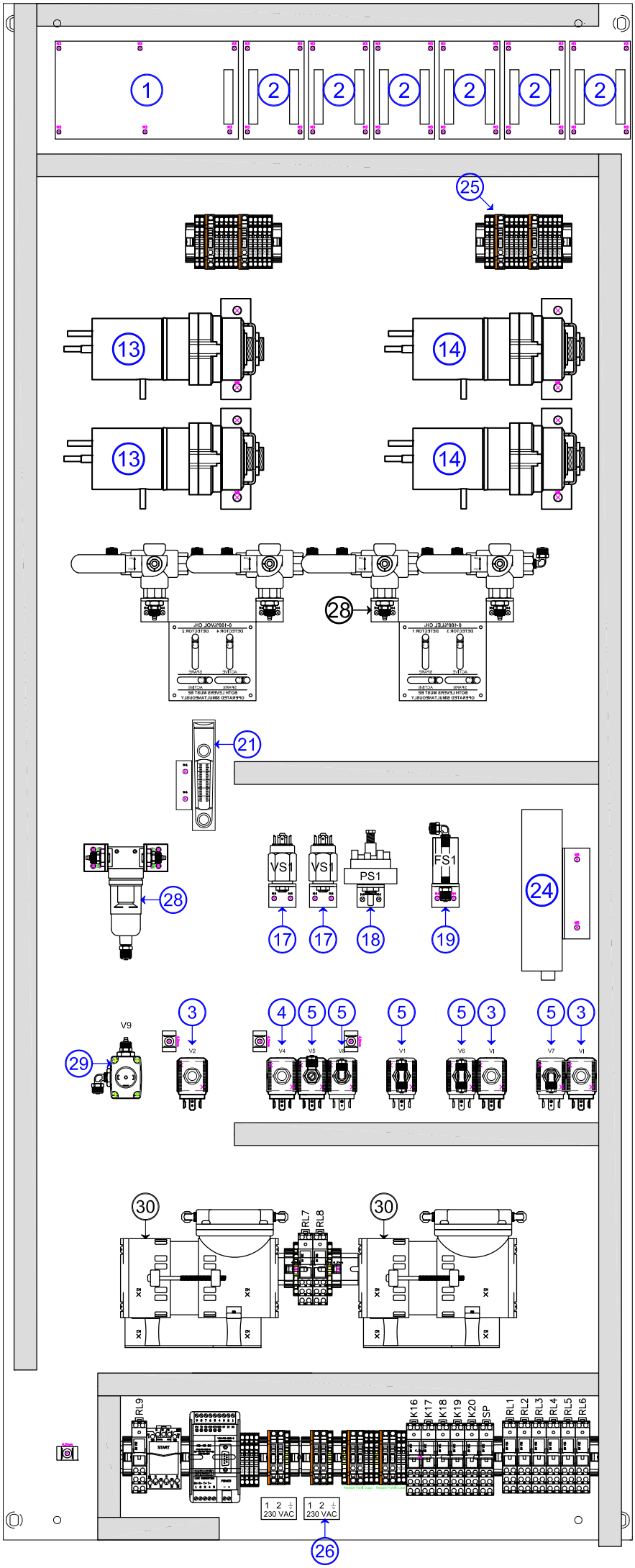

Parts List

1	RIOK-40 PCB Part no: 019240
2	RIOK-41 PCB Part no: 019241
3	6013A2,0 24VDC8W Solenoid valve Part no: 004651
4	6013A2,0 24VDC5W Solenoid valve Part no: 004654
5	6014T2,0 24VDC8W Solenoid valve Part no: 004652
13	Optima CH4 % LEL Gas Detector Part no: 5200204-01A
14	Optima CH4 % VOL Gas Detector Part no: 5200204-02A
17	Vacuum Switch Part no: 007317
18	Pressure Switch Part no: 007303
19	Flow Switch LPH 125-10 Part no: 007301
21	Flow Meter 0-100 5200217-00A
24	Power Supply SP-100 Part no: 1210560
25	Terminals For Gas Detectors
26	Terminal block, for more info see drawing
28	N204-F00 Water trap 5200217-00A
29	330-C Solenoid valve 004655
30	THOMAS PUMP 15L 007350

Consilium
Göteborg, Sweden
www.consilium.se
Copyright Consilium Marine AB

G003511

IR Gas detector with flow house

Salwico GD FH TRUE IR

Part no. 5200204

System: Salwico SW2020

General Description

The Salwico GD FH TRUE IR gas detector is a point detector for gas concentration monitoring potentially hazardous environment.

Salwico GD FH TRUE IR with flow house is normally fitted inside sampling systems.

This gas detector is based on infrared absorption. Solid state design improves reliability, long-term stability and accuracy in continuous measurement of gas concentrations in ambient air.

Compared with catalytic sensors the Salwico GD FH TRUE IR has the following advantages:

- Proven high reliability and long term stability results in low test frequency and no calibration cost
- Automatic self test
- Failure will not give gas alarm
- Presence of oxygen is not required during equipment life time
- Immunity to poisoning from H_2S, silicone and other agents
- No saturation effects from high gas concentrations
- The gas flow rate has no influence on accuracy
- Several different mounting possibilities

Data

Detection method	IR-absorption, dual wavelength, dual path
Gases detected	Hydrocarbons
Nominal voltage	24 VDC
Working voltage	18-32 VDC
Working current	2 mA
Power consumption	Max 4.5 W
Ingress protection	IP66
Expected lifetime	15 years
Ex proof housing	EExd IIC T4
Response time	T50<4.5 sec, T90<6.5 sec
Accuracy	Baseline < ±1% LEL 50% FSD < ±2% LEL
Temperature range	-40°C to +65°C
Material	316 Stainless steel
Colour	Black/Silver
Weight	1.6 kg
Safety approvals	ATEX Ex, II 2 G EEx d IIC T5 (T_{amb} -40°C to +55°C) T4 (T_{amb} -40°C to +65°C) UL/CSA Class 1, Div 1, groups B, C, and D (-40°C to +65°C). GOST and SAA
Performance approvals	EN50054, EN50057, CSA C22.2 152.
EMC compliance	EN 50270

Part number

5200204-00A	Salwico GD FH TRUE IR C_3H_8
5200204-01A	Salwico GD FH TRUE IR CH_4
5200204-02A	Salwico GD FH TRUE IR CH_4 VOL%

Accessories

5200202-00A	Handheld Interrrogator TRUE IR
5200210-00A	Salwico GD FH TRUE IR bracket

Mounting

Always mount Salwico GD FH TRUE IR horizontally.

Connection

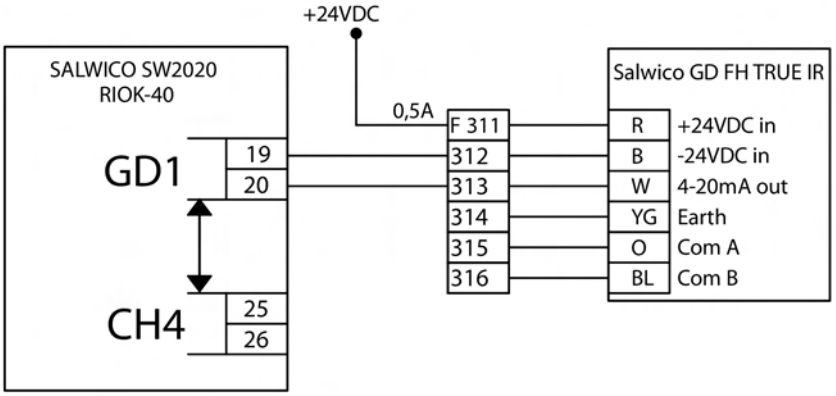

R	=	RED
B	=	BLACK
W	=	WHITE
YG	=	YELLOW and GREEN
O	=	ORANGE
BL	=	BLUE

Dimensions (mm)

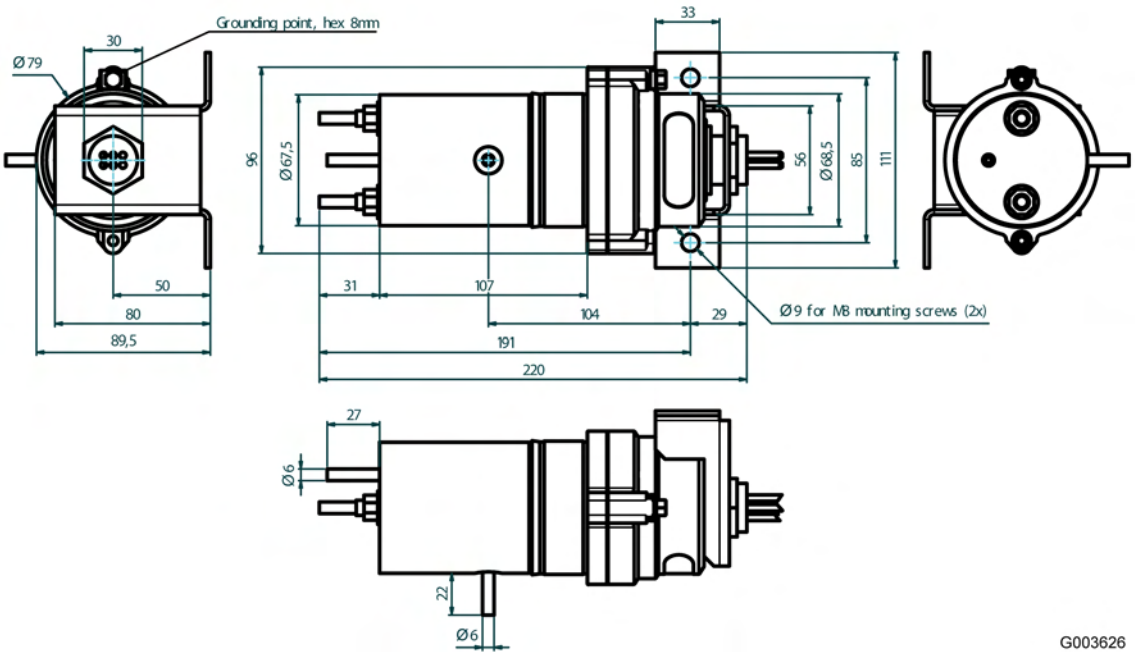

Flame arrester
Salwico FTH-1/4

Part no. 4227

System: Salwico gas alarm systems

Description

The Flame arrester Salwico FTH-1/4 is designed to meet the requirements for explosion proof penetration of bulkheads and walls between safe and dangerous areas, with sample and exhaust pipes for gas sampling and detection systems.

Data

Material:	Body and filter: Stainless Steel 316L O-ring: Viton
Explosion group:	IIA, IIB and IIC
Weight:	85 g
Part no.:	4227

Dimensions (mm)

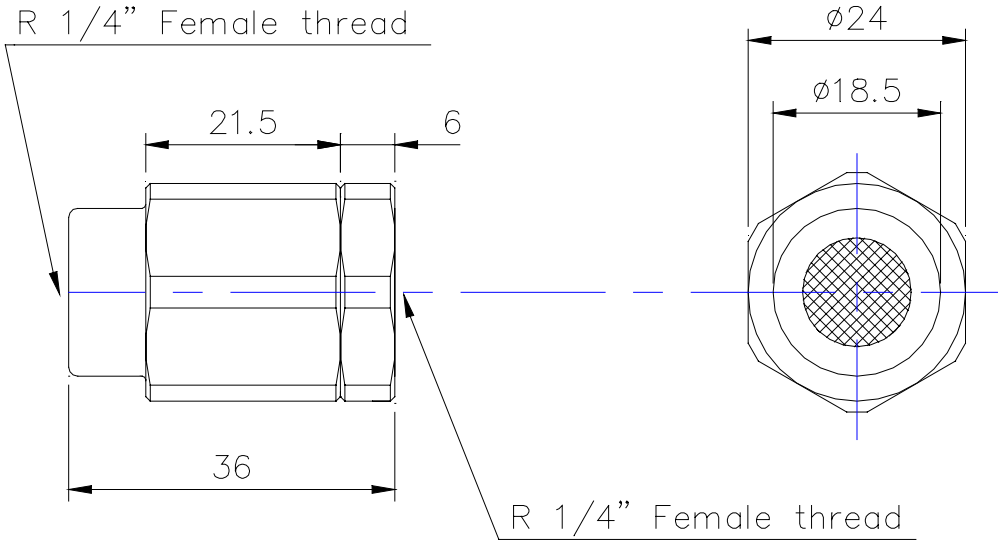

Consilium
Consilium Marine AB
P.O. Box 8763, SE-402 76 Göteborg
Phone +46 31 7107700 Fax +46 31 7107800
www.consilium.se

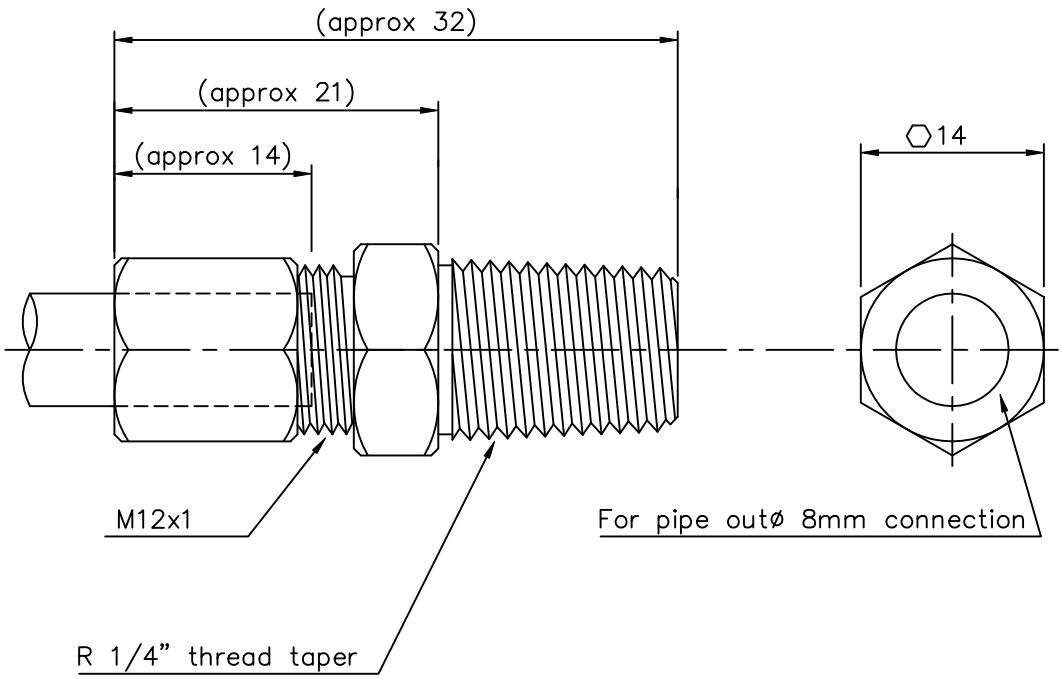

4259						
Item no	Quant.	Description	Note			
Design	Draw. EOM	Project SALWICO GAS ALARM SYSTEM		Rev.	Date	Sign.
		COUPLING SUS 8–1/4" DIMENSION DRAWING	Approved	Date 950726		
			Dwg.no. S–4–005.523/E		Page	

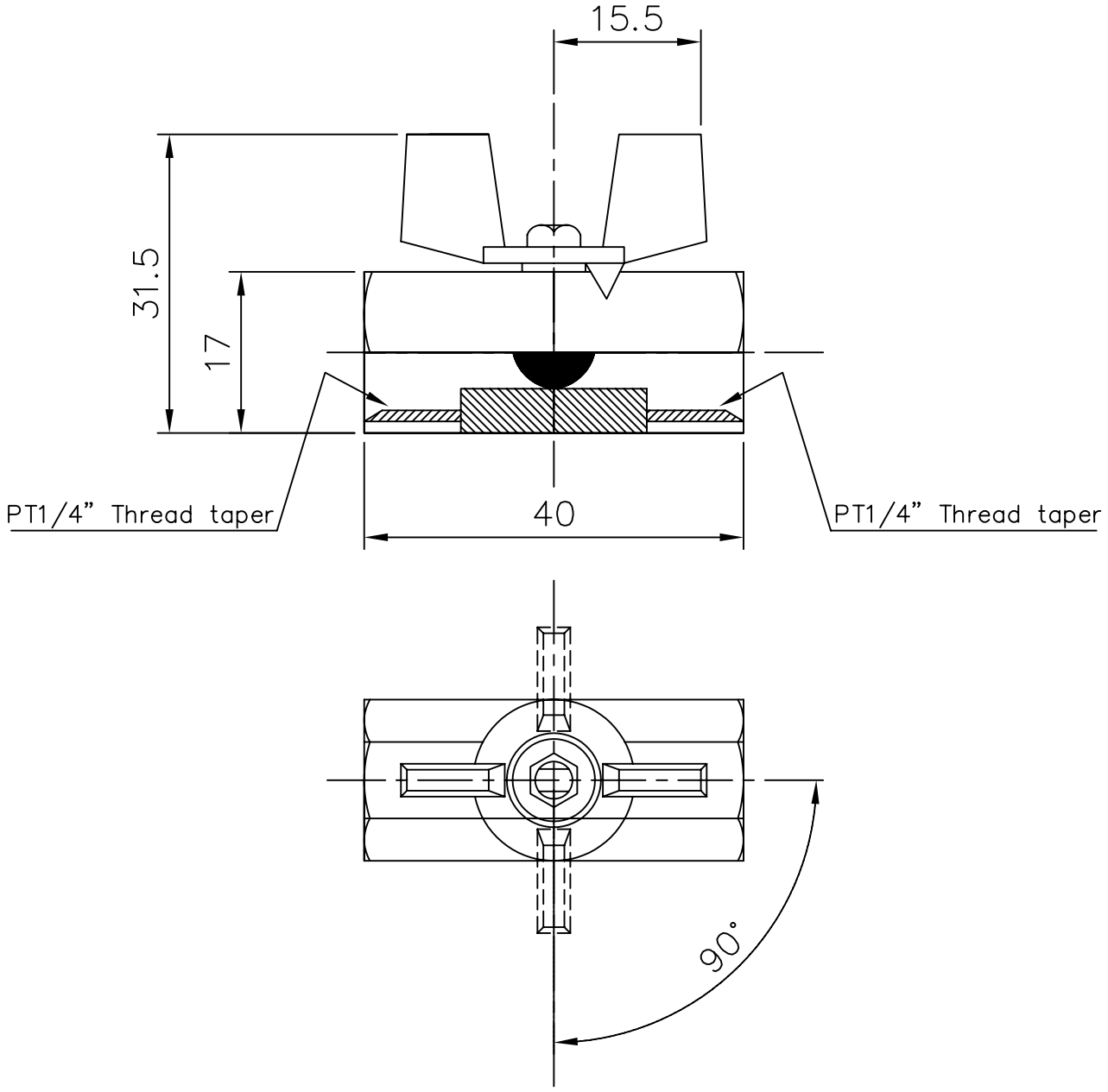

Material : SUS 316

Item no	Quant.	Description	Note			
Design	Draw.	Project SALWICO GAS ALARM SYSTEM		Rev.	Date	Sign.
			Approved	Date 050928		
		SHUT-OFF VALVE, SUS 1/4"-1/4" DIMENSION DRAWING	Dwg.no.		Page	

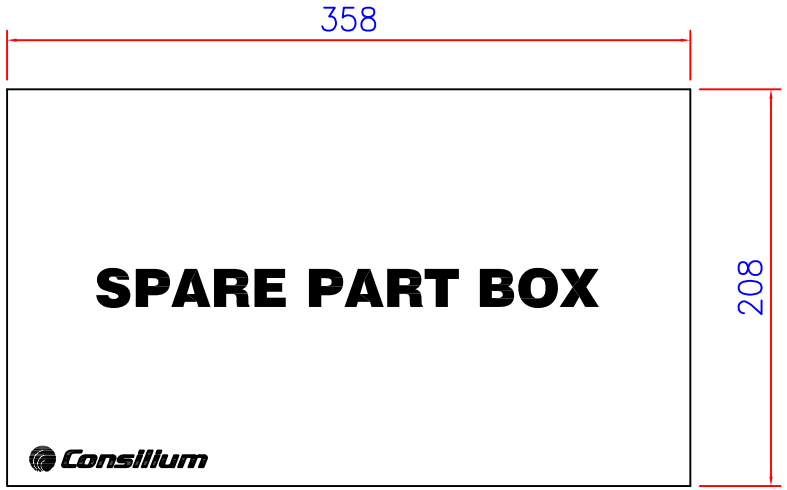

TOP VIEW

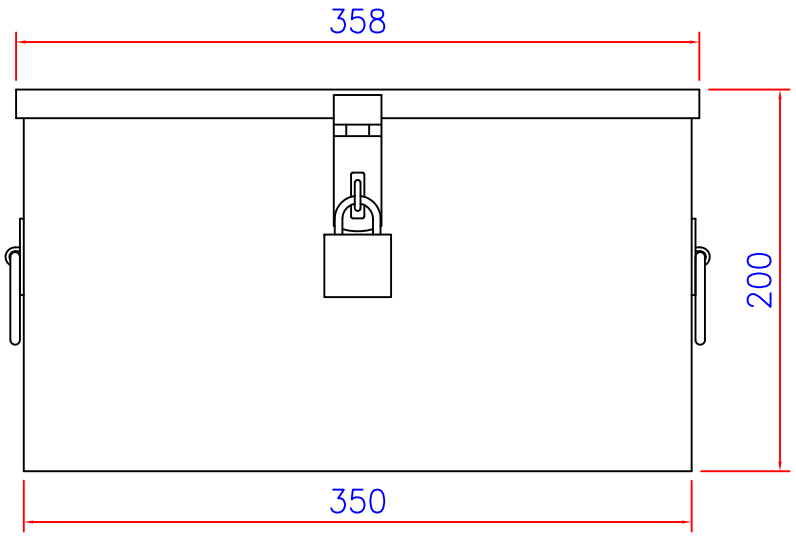

FRONT VIEW

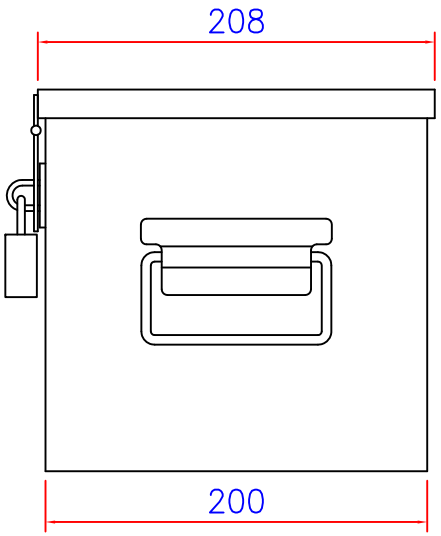

SIDE VIEW

NO.	DATE	DESCRIPTION	NAME	SHEET NO.	.
3	.	.	.	APP BY	
2	.	.	.	CHK BY	
1			.	DWG BY	
0			.	SCALE	

PROJECT	
NAME	Consilium Spare box
DRAWING NO.	

ASIA ELECTRIC CO.

NO.	NAME	MATERIAL & SPEC.	Q'TY
6			
5			
4			
3			
2			
1			

4.6 Vacuum Pump

The vacuum pump 107 CCD20 used in the SW2020 Gas Sampling System is a membrane pump designed for a high degree of efficiency when it is used for vacuum.
It is designed for continuous operation with permanently lubricated bearings, a long life Buna “N” diaphragm, stainless steel valves and aluminum valve plate. The pump is balanced for low vibration operation and in addition mounted on shock absorbers.
The diagram for calculation of sampling time previous in this manual is a result from real tests on vacuum pump 107 CCD20, with sampling pipes of inner diameter 6 mm.
The flow meter and the flow switch monitor the flow capacity of the pump.
The system vacuum guard or the flow switch supervises the tightness of the pump membrane.

DATA:

Model:	Thomas 107 CCD20
Motor voltage/frequency	220/50-230/60
Power	130 Watt
Current	1,0 Amp
Flow at free flow	19 L/min
Flow at –0.2 Bar (vacuum)	14 L/min
Flow at –0.4 Bar (vacuum)	9 L/min

MAINTENANCE:

Below procedures refer to the drawing and part list found on the next page.

The maintenance of the pump is mainly to exchange diaphragm and valve flappers after they have been worn-out. By removing of the pump head with the four screws (item 13), this service is easily accessible.

Exchange the diaphragm (item 3) by removing the diaphragm hold down plate (item 5) with the four screws (item 4).

Exchange or cleaning of the valve flappers:
Remove the valve plate (item 24). Unscrew the valve flapper screw and remove the valve flappers (item 20), one on each side of the valve plate. Be careful not do damage or contaminate the surface where the flappers are working. Clean the flappers and the surface carefully with alcohol and then blow dry. Make sure that the flappers are pressing tight towards the valve plate, otherwise the capacity of the pump will be reduced.

Our Spare part set for the pump **Art. No. 7360**, contains diaphragm, valve flappers and valve plate gasket (item 3, 20 and 23).

DRAWING AND PARTS LIST

Item No.	Part No.	Component No.	Description	Qty.
1	607180		Connecting Rod Assembly	1
2		607139	Connecting Rod	1
3		608148	Diaphragm	1
4		625540	Screw - Hold Down Plate	4
5		654649	Diaphragm Hold Down Plate	1
6	614425-504		Motor End Cap Assembly	1
7	614609		Vented Cover - Front & Rear	2
8	615403		Spacer - Eccentric	1
9	624444-504		Adapter Ring	2
10	625114		Connecting Rod Screw	1
12	625266		Front Cover Screw	8
13	625444		Head Screw	4
14	633544		Fan - CW Natural	1
15	633545		Fan - CCW Gray	1
16	See Chart		Eccentric & Bearing Assembly	1
17		625244	Eccentric Set Screw	1
18	660873-504		Head & Valve Plate Assembly	1
19		617045	Valve Keeper Strip	2
20		621102	Valve Flapper	2
21		625160	Valve Flapper Screw	2
22		625606	Screw - Valve Plate	4
23		633439	Valve Plate Gasket	1
24		654129	Valve Plate	1
25		660131-504	Head	1
29	633267		Bushing (Not Shown)	1
N.S.	633584		Cord Assembly	1

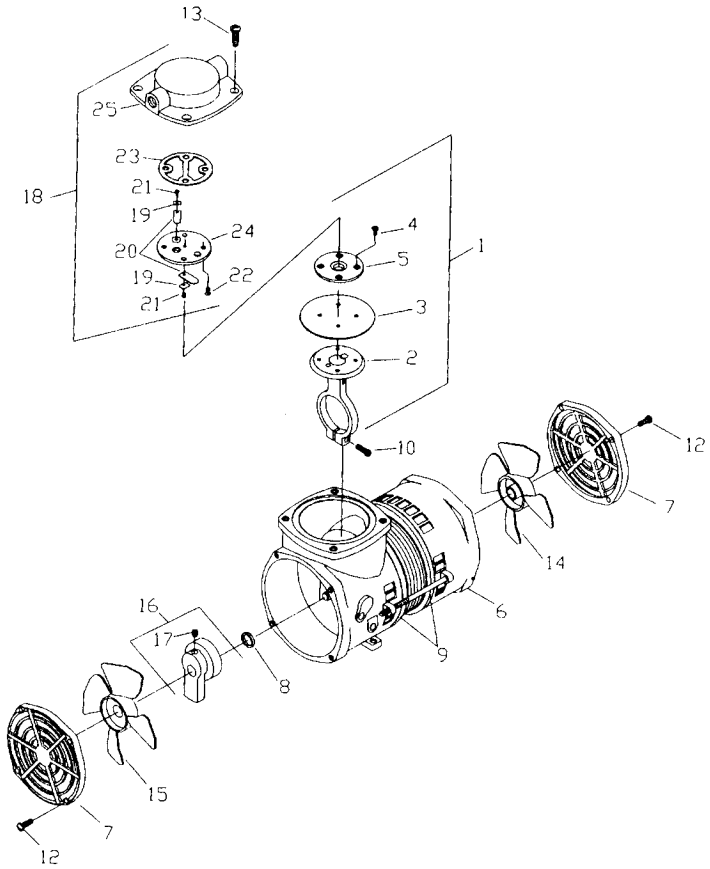

Model No.	Stator No.	Voltage
107CA	608102	115/60
107CD	608107	230/50
107CB	608152	115/50
107CC	608129	230/60
107BD	608107	230/50
107BA	608102	115/60
107CCD	608865	230/50
107CAB	608118	115/60

Eccentric Assembly No.	Eccentric No.	Bearing No.	Stroke
645684	645410	646069	.050
645599	645354	646069	.110
645298	645214	646069	.140
645372	645215	646069	.160
645373	645216	646069	.180
645374	645217	646069	.200

107BA				107BD			
Delete	Item No.	Part	Add	Delete	Item No.	Part	Add
607139	1	Connecting Rod	607142	607139	1	Connecting Rod	607142
	N.S.	Hose Connector	607019		N.S.	Hose Connector	607019
	N.S.	Nut-Hose	626455		N.S.	Nut - Hose	626455
	N.S.	Felt	641020		N.S.	Felt	641020

Consilium Marine

2013-08-22 YSN/FA Rev.A

SCOPE OF SUPPLY LIST

Product Salwico Gas Detection System
Salwico Gas Sampling System SW2020

Our Ref. No. SG-28567

Shipyard Samsung Heavy Ind. Co. LTD.
530, Jangpyung-Ri, Shinhyun-up
P.O. Box Go Hyun 9
Koje-city, Kyungnam
REP. OF KOREA

NB H 2074

Item	Description	Q´ty
Spare parts GDS system		
1	7200113 Box for spare parts (steel) 350x200x200	1pc
2	5110003-03G IA 0-20 M, 4-20 Input Module	1pc
3	5110004-03G Power boost M, Distribution Module	1pc
4	5100080-03A Relay M 8, Relay Module	1pc
5	5200138-01A Optima Plus IR detector, II 2 G EEx d, 0-100% LEL C3H8	1pc
6	Calibration bottles	
	- 5201001K-30A, 70% Methane, 112LTR	6pcs
	- 5201013-02A	1pc
Spare parts SW2020 system		
1	1720	1pc
	Standard spare part set, two years, consisting of	
	- 5201059-00A, Solenoid valve 6014-C-2,0 8W	2
	- 4227, Online filter/flame trap SUS	1
	- 4229, Filter Element for flame trap	10
	- 4219, Teflon house 6/4	1.5m
	- 7360, Repair kit for 15L pump 7350	1
	- 8200, Fuse 500mAT 5x20	10
	- 8218, Fuse 100mAT 5x20	10
	- 8219, Fuse 315Mat 5x20	10
	- 8225, Fuse 4AT 5x20	10
2	7200113 Box for spare parts (steel) 350x200x200	1pc
3	7350, Spare pump.	2pcs
4	7351, Membrane for pump	2pcs
5	19240, RIOK-40, PCB card	1pc

6	19241, RIOK-41, PCB card	1pc
7	53030, SP-100-27, Rectifier	1pc

Gas bottles installed in SW2020 cabinet

8	5201001K-00A Gas bottle, CH4 50% LEL	3pc
9	5201001K-20A Gas bottle, CH4 100% VOL	3pc
10	5201013-02A Calibration kit	2pcs

Manual

Consilium

Salwico

Gas Detection System

User Guide

Consilium Marine & Safety AB
Fire & Gas Marine Division
Phone: +46 31 710 77 00
Fax: +46 31 710 78 00
E-mail: Service: service@consilium.se
Spares: spares@consilium.se

Consilium Marine & Safety AB
Navigation Division
Phone: +46 8 563 05 100
Fax: +46 8 563 05 199
E-mail: Service, APT: service-navigation@consilium.se
Spares: spares-navigation@consilium.se

Consilium Marine & Safety AB
Transport Division
Phone: +46 31 710 77 00
Fax: +46 31 710 78 00
E-mail: Service: transport@consilium.se
Spares: transport@consilium.se

The contents of this document are subject to revision without notice due to continued progress in methodology, design and manufacturing. Consilium assumes no legal responsibility for any error or damage resulting from the usage of this document.

June 2012
Document no. 5103017-00A01
Part no. Part no: 5103017

© 2012, Consilium Marine & Safety AB

1 Introduction 1

1.1 About this manual 1

2 Symbols Used in the Manual 3

3 Gas Detection System 5

3.1 System Description 5

3.2 System Block Diagram 5

4 Control Panels 7

4.1 Control M Gas 7

4.1.1 Keys and Indicators 7
4.1.2 Menu system 8
4.1.3 Icons 11

5 Operations 13

5.1 Access Levels 13

5.2 Login 14

5.3 Pre-Alarm 15

5.4 Gas Alarm 15

5.4.1 Information about gas alarm on the Control M Gas 15
5.4.2 Mute a Gas Alarm 16
5.4.3 Reset a Gas Alarm 16
5.4.4 Several Alarms 16

5.5 Fault indications 17

5.5.1 Information about fault indications on the Control M Gas 17
5.5.2 Mute a Fault 17
5.5.3 Reset a Fault 18
5.5.4 Reset a Fault from the fault list 18
5.5.5 Reset all Faults 18

5.6 Fault messages 18

5.7 Disablements 19

5.7.1 About disablements 19
5.7.2 Available disablements 19
5.7.3 Acknowledgement of a new disablement .....
5.7.4 Disabling zones .....
5.7.5 Disabling gas detectors .....

5.8 Reconnecting .....

5.8.1 Reconnecting disabled zones .....
5.8.2 Reconnecting disabled detectors .....
5.8.3 Reconnecting all .....

5.9 Service menu .....

6 Testing 23

6.1 About testing 23

6.2 Test the control panel display 23

7 Appendix 25

7.1 Fault Code List 25

7.2 Definitions of Terms 27

8 Quick Guide for the Control M Gas 31

Index 33

1 Introduction

1.1 About this manual

This User Guide is intended for personnel using the Gas detection system and provides basic understanding of how to operate the system.

NOTE!
This guide is valid for Control panel software versions up to version 1.0.0.

The chapter Gas Detection System gives general information about the system.

The chapter Control Panels describes the function of the Control panel in the Gas detection system.

The chapter Operations describes how to operate the Gas detection system.

The chapter Testing provides brief instructions on how to connect and test the system (detailed information is found in the Service & Maintenance manual).

The Fault Code List in the Control Panels lists the different fault codes.

G005222

Figure 2. Cabinet LNG GDS for Salwico Gas detection systems

2 Symbols Used in the Manual

DANGER!
Risk of serious or fatal injury to the user, and/or severe damage to the product, if the instructions are not followed.

WARNING!
Risk of personal injury and/or damage to the product if the instructions are not followed.

CAUTION!
Risk of minor or moderate personal injury. Risk of equipment damage, loss of data, extra work, or unexpected results, if the instructions are not followed.

NOTE!
Note symbols alert you to important facts and conditions.

Hint
Tip symbols direct you to specific instructions, such as where to find additional information and tell you how to perform a certain operation in an easier way.

3 Gas Detection System

3.1 System Description

This Gas detection system is a state-of-the-art addressable detection system designed to meet marine, industrial and transport requirements. Special care is given to ergonomics and user-friendliness with its logical and intuitive operator panel.

3.2 System Block Diagram

The following figures shows some typical systems with connected components, see Definitions of Terms, page 27 in the Appendix for explanation of terms and abbreviations.

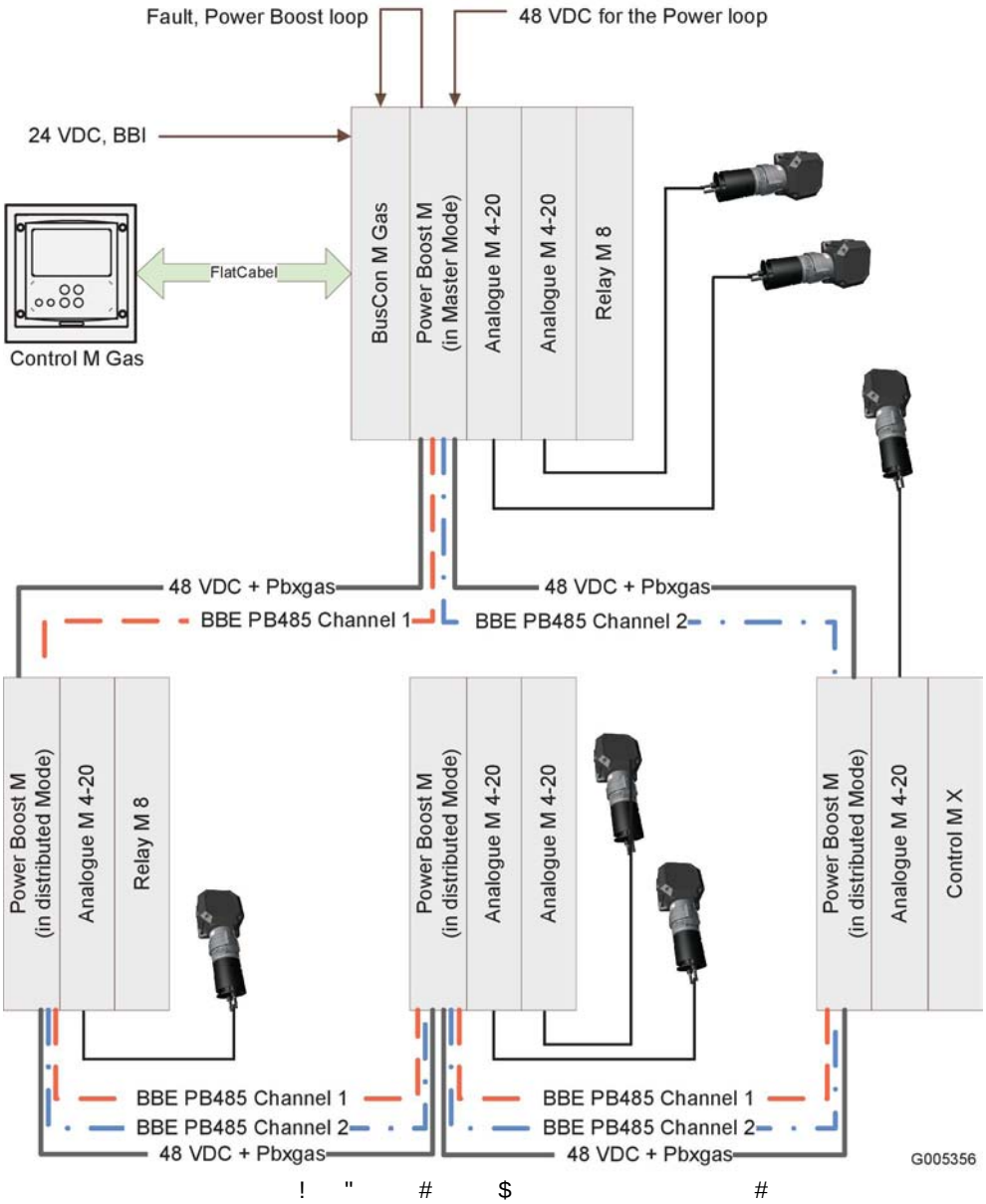

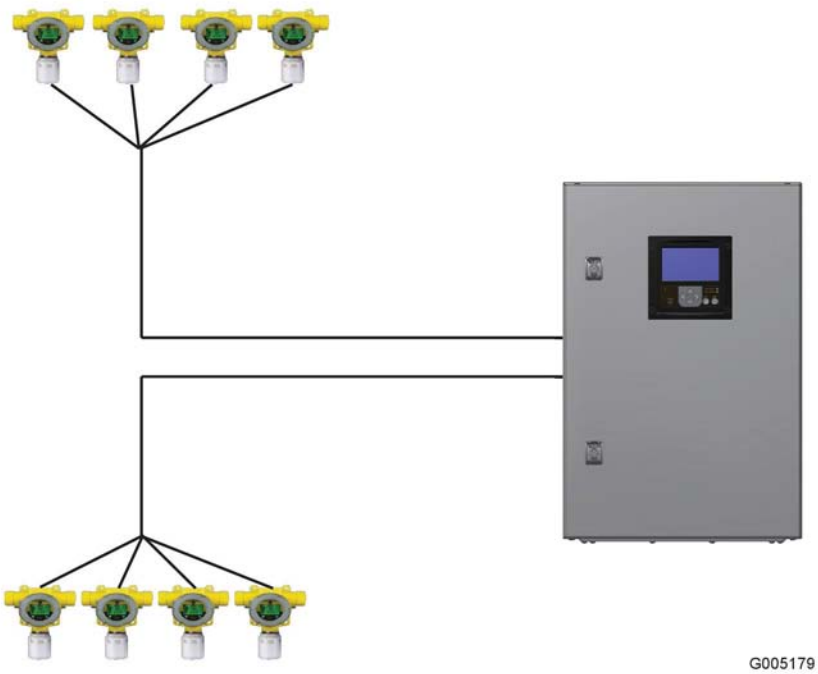

Figure 4. An overview of a Gas Detection System

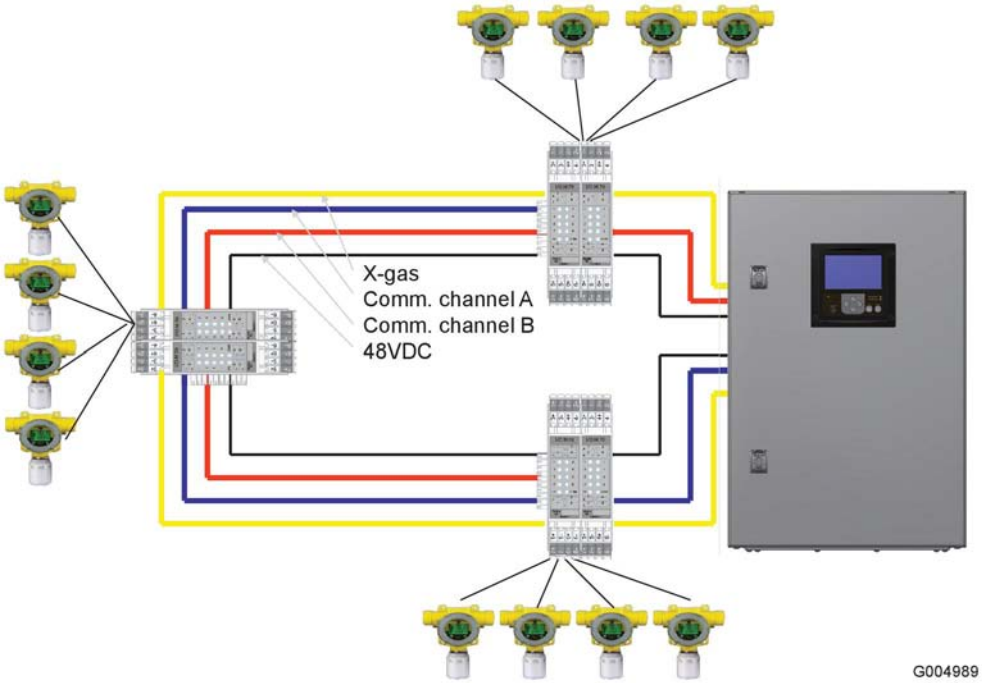

Figure 5. An overview of a distributed Gas Detection System

4 Control Panels

4.1 Control M Gas

4.1.1 Keys and Indicators

G005166

' (!

Control M Gas can be used as either a control panel or a repeater panel. The keys and indicators are the same in both cases.

1.

Steady green light	Power supply to the control panel is OK.
Flashing green light	Not operational, i.e. during firmware update etc.

2.

Button to adjust the brightness level for indicators and display.

3.

Flashing red light	Unmuted gas alarm(s) in the system.
Steady red light	All gas alarms are muted.
Switched off	No alarms in the system.

4.

Flashing yellow light	An unmuted fault in the system.
Steady yellow light	All faults are muted.
Switched off	No faults in the system.

5.

Use the arrow keys to navigate menus, select different menu alternatives and confirm selections.

Hint

Long push on left button returns to the home menu.
Long push on the up or down buttons jumps 5 entries in lists.

6. **Reset**

   Press button to reset the selected alarm, fault or disablement.

   Alarms and faults must be muted before they can be reset.

7. **Mute**

   Press button to mute (acknowledge) all alarms or faults in the selected list. This button will also silence the local summer.

)

The Gas detection system is menu-operated. All system functions are available from the different menus. The gas detection system is normally displaying a greeting screen with a short description of the system status.

From the greeting screen press to go to the **Top menu** or to go to the **Observation list**.

, - (

- Scroll and select menu alternatives with the and arrow keys.
- Use the arrow key to continue to the next menu (or to confirm the next step).
- Use the arrow key to go back to the previous menu.

%

Table 1. Top menu alternatives

-	-
	The controll panel can be left in this menu in order to always display the measurement for a certain detector.
	View and handle gas alarms and pre-alarms.
	View the list of faults and warnings. Handle (mute/reset) of faults.
	View or reconnect disablements.
	Calibrate, disable or see detailed information about detectors.
!	Disable zones.
	Enter options for various service functions.

% .

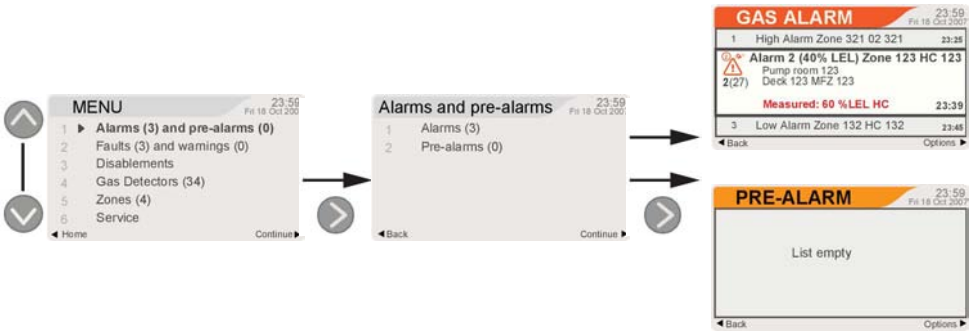

Table 2. Alarms and pre-alarms menu alternatives

-	-
	View the list of currently active gas alarms. The options include reset.
	View the list of currently active gas pre-alarms. The options include reset.

/ , (

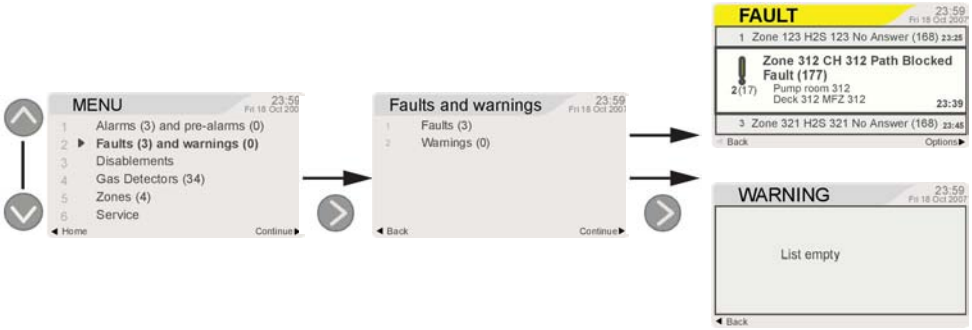

Table 3. Faults and warnings menu alternatives

-	-
	View the list of currently active faults. The options include reset.
"	View the list of currently active warnings. The options include delete.

Disablements

) % "

Alternatives	Available actions
	The selected disablement will be reconnected*.
	All disablements will be reconnected*.

* Refer to chapter Disablements, page 19.

Gas detectors

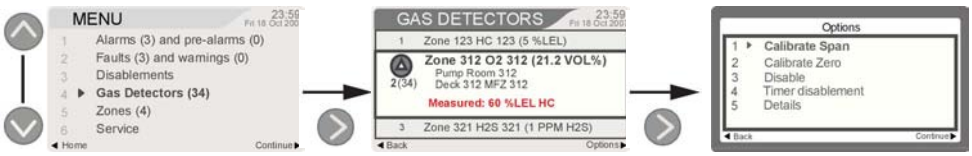

) & "

Alternatives	Available actions
#	Menu to perform span/delete calibration of the selected gas detector.
# !	Menu to perform span/delete calibration of the selected gas detector.
	Disable the selected detector*.
	Make a timer disablement of the selected detector*.
	See detailed information for the selected detector.

* Refer to chapter Disablements, page 19.

Zones

) ' + "

Alternatives	Available actions
	Disable the selected zone*.
	Disable the zone for a period of time*.

* Refer to chapter Disablements, page 19.

Service

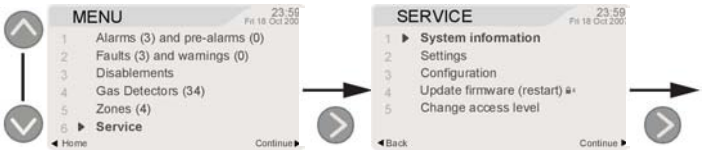

Table 7. Service menu alternatives

-	-
$	System information include System Details, HW Modules, History List and Copy system log to USB Memory*.
	Settings are used for setting time and date, Display & LED test, Dimmer and Disable all outputs*.
# $	Configuration menu to get the configuration from the USB Memory, copy the configuration to the USB Memory and apply the configuration (restart)*.
% $ & '	Firmware update*.
# (	Login menu to Change the access level.

* Please refer to the Service & Maintenance manual for further information.

) $

Explanation of symbols used in different menus.

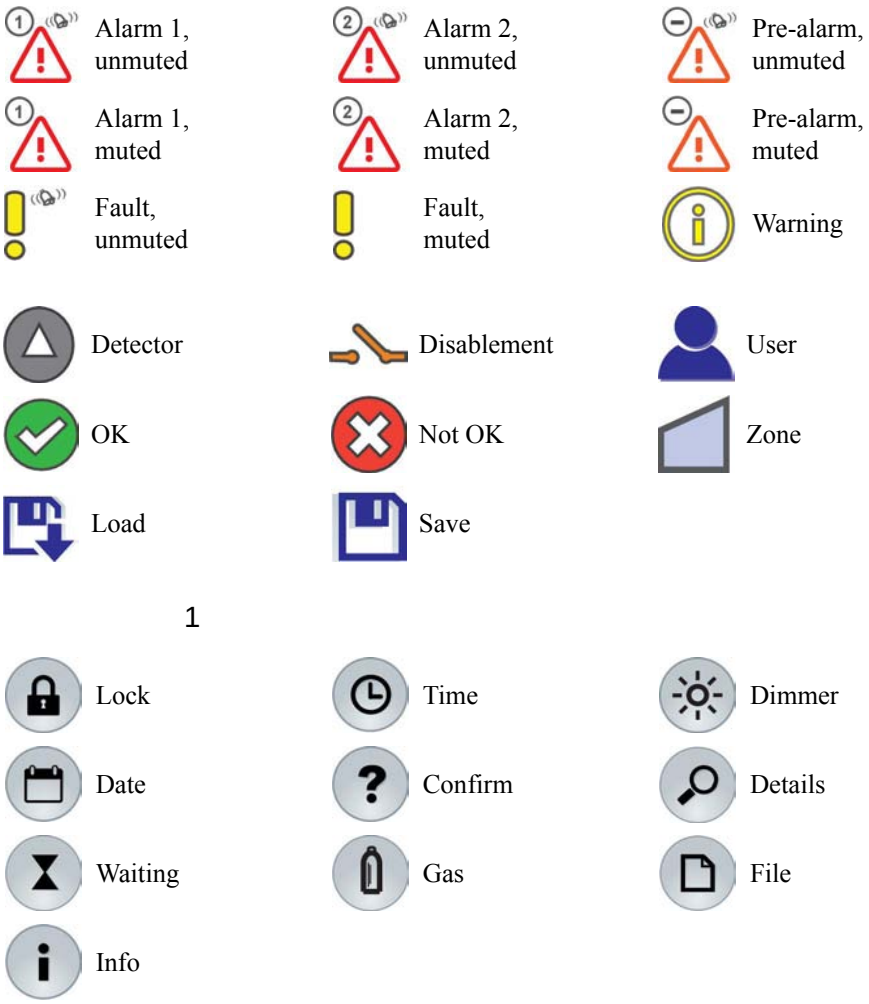

1

Icons in result menus

Success

Fail

Arrow key icons

◀ Left

▶ Right

5 Operations

5.1 Access Levels

To prevent un-authorized operation of the system access levels protect the different functions of the Gas detection system.

The user has to log in to the system before any operations on high access level can be performed. Without an authorization code can the user only access permissions on the default level.

Repeater panel: Access level 1 is the default level.

Control panel: Access level 2 is the default level.

The system automatically returns to the default access level after 30 minutes of inactivity.

Description of Access levels

There are different access levels as shown in the following table:

) - "

Access level	Procedure to enter level	User	Permissions
1	) * None.	General personnel.	The following functions are available: • Access to view information, i.e. lists and menus in general but not the menus that require a higher access level to proceed. • Local mute, i.e. silencing of the local buzzer • LED and display test • Dimmer level • Change access level

Access level	Procedure to enter level	User	Permissions
2	# * Control panel = No access code. Repeater (supervisor) panel = Enter access code for level 2 via menu/login.	Personnel trained and authorized to operate the system in case of gas or maintenance.	Same permissions as level 1, plus these additional permissions: • Mute (acknowledgment) of alarms, faults and pre-alarms • Reset of alarms, faults and pre-alarms • Disablement of point detectors and zones • Activating the point detector or zone ‘test mode’ disablement • Removal of one or all disablements, the ‘test mode’ and ‘all outputs’ disablements included • Calibrate span • Calibrate zero • Copy system log to USB Memory • Set time and date
3	($ $ * Enter access code for level 3 via menu/login.	Personnel trained and authorized to make changes to the configured system.	Same permissions as level 2, plus these additional permissions: • Reset all alarms • Reset all pre-alarms • Reset all faults • Get configuration from USB Memory • Copy configuration to USB Memory • Apply configuration (restart)
4	* Enter access code for level 4 via menu/login.	Only authorized service personnel trained by an authorized service organization.	All functions available, including: • Disable all outputs • Get service pack from USB Memory • Copy service pack to USB Memory • Firmware update

Custom Specific Restrictions

NOTE!
Permissions on the different access levels can in some cases vary depending on programmed custom specific restrictions.

A Control M Gas can be programmed to view events in the system with restricted rights to operate functions. For example a gas alarm is shown, but mute and reset are not allowed.

5.2 Login

Each user is assigned to a specific access level.

The predefined users are assigned the following default access codes:

Level 2	2222
Level 3	3333

To change access level in the system:

1	Go to . / " / ! " and select user.	
2	Enter the four-digit access code for the access level.	The system will acknowledge if the correct code is entered.

5.3 Pre-Alarm

NOTE!
Pre-alarms are configurable for each gas detector and are often not used.

The pre-alarm function gives an early alarm to gas conditions. The indication menu “Pre-Alarm” is shown on the control panel.

The pre-alarms priority level is lower than for gas alarms.

NOTE!
Gas alarms take precedence over pre-alarms.

The pre-alarm is also added to the Pre-Alarm List found under: . /
* / # * .

The pre-alarm usually does not activate any alarm devices or external outputs.

5.4 Gas Alarm

5.4.1 Information about gas alarm on the Control M Gas

The following sections describes the information displayed during a gas alarm, how to mute and reset an alarm and the different types of alarms.

G005132

, !

The following information is displayed in the Control Panel:

- Number of alarm(s)
- Zone in alarm
- Type of unit in alarm
- Time and date of alarm
- Supplementary text for location (if defined in the system configuration)

Press for options.

5.4.2 Mute a Gas Alarm

NOTE!
An alarm must be muted before it can be reset.

1	Press	Access level 2 or higher: Silences the internal buzzer and all external alarm devices[1] and mutes the gas alarm indication. The gas indicator stops flashing but remains lit until the gas alarm is reset.
2	Press Options for more details.	

5.4.3 Reset a Gas Alarm

NOTE!
The alarm must be muted before it can be reset.

1	Press to reset the current Gas Alarm.	**NOTE!** Alarms cannot be reset as long as the device remains in alarm condition.

5.4.4 Several Alarms

1	Scroll through the different gas alarms with the / arrow keys.	Long push on up or down buttons jumps 5 entries in the list.
2	Mute and reset as above.	For detailed instructions, see Mute a Gas Alarm, page 16 and Reset a Gas Alarm, page 16.

1) Programmable function of external devices, programmed by system Cause/Effect

5.5 Fault indications

5.5.1 Information about fault indications on the Control M Gas

The following sections describe the information that displays when a fault occurs and how to mute and reset a fault.

G005133

- !

The following information is displayed in the Control Panel:

- Number of detected fault(s)
- Type of fault
- Identification of the faulty item
- Supplementary text for the location (if defined in the system configuration)
- Time and date when the fault occurred

Press for options.

5.5.2 Mute a Fault

NOTE!
A fault must be muted before it can be reset.

1	Press to silence internal buzzer and mute all faults in list.
2	Press Options for more details.

5.5.3 Reset a Fault

NOTE!
A fault must be muted before it can be reset.

1	Press to reset the current fault alarm.	If the cause of the fault alarm remains, the alarm cannot be reset. Check the fault code in the Fault Code List, page 25 to solve the problem.

5.5.4 Reset a Fault from the fault list

All faults in the system are shown in the fault list.

NOTE!
A fault must be muted before it can be reset.

1	Go to the fault list under: . / / .	
2	Choose the fault in the fault list and press to reset the fault alarm.	**NOTE!** If the cause of the fault alarm remains, the alarm cannot be reset. Check the problem, solve it, and reset the fault.

5.5.5 Reset all Faults

NOTE!
A fault must be muted before it can be reset.

1	Go to: . / / .	
2	Press Options .	
3	Select 0 and press Continue .	The system will make an attempt to reset all faults.

5.6 Fault messages

The control panel displays a fault with information about where in the system the fault occurred and a short description of that fault.

See Fault Code List, page 25 for a list of all fault messages.

5.7 Disablements

5.7.1 About disablements

It is possible to disable different devices attached to the system such as zones and detectors.

All disablements are shown in the disablement list.

Enter access level 2 or higher to make a disablement.

DANGER!
When a gas detector or zone is disabled, the Gas detection system will not be able to detect any gas leakage in that area. It is therefore important that disablements are minimized in terms of quantity of disabled units and duration of time.

5.7.2 Available disablements

Permanent disablement

The device is permanently disabled until it is manually enabled.

Timer disablement

Disablement is instantaneous and lasts for the time period entered (hh:mm). Maximum disablement time is 23 hours 59 minutes.

5.7.3 Acknowledgement of a new disablement

Once a new disablement is correctly entered, an acknowledgement is presented on the control panel.

The new disablement is also added in the disablements list under: . /

5.7.4 Disabling zones

(Access level 2 or higher)

Permanent disablement

1	Select . / + .
2	Choose Zone (Zone number) and press Options .
3	Select and press Continue .

Timer disablement

1	Select . / + .
2	Choose Zone (Zone number) and press Options .
3	Select) and press Continue .

5.7.5 Disabling gas detectors

(Access level 2 or higher)

Permanent disablement

1	Select . / .
2	Choose detector and press Options .
3	Select and press Continue .

Timer disablement

1	Select . / .
2	Choose detector and press Options .
3	Select) and press Continue .

5.8 Reconnecting

5.8.1 Reconnecting disabled zones

All disablements in the system are presented in the disablements list. Any enablement is made from this list.

1	Select . / .
2	Choose the disablement you want to enable again and press Options .
3	Select 0 and press Continue .

Hint

You can also use the button to reconnect a selected zone.

5.8.2 Reconnecting disabled detectors

All disablements in the system are presented in the disablements list. Any enablement is made from this list.

1	Select . / .
2	Choose the disablement you want to enable again and press Options .
3	Select 0 and press Continue .

5.8.3 Reconnecting all

All disablements in the system are presented in the disablements list. Any enablement is made from this list.

1	Select *Menu » Disablements*.
2	Press Options .
3	Select *Reconnect all* and press Continue .

2 9 -

(Access level 2 for basic functions, but access level 4 is needed to perform advanced service options.)

The Service menu is used for configuring the system in the commissioning phase, as well as for troubleshooting and making small updates when the system is in operation. The menu has functions for loading and saving information from/to a suitable USB Memory.

The Service menu screen displays a list of the 5 service menu alternatives, as shown in the figure below.

Figure 9. Service menu screen

Please refer to the Service and Maintenance manual for detailed information about the Service menu.

6 Testing

6.1 About testing

For additional information about testing a gas detection zone or a gas detector, please refer to the Service and Maintenance Manual.

6.2 Test the control panel display

With the function Display & LED test it is possible to test:

- The display
- All indications on the control panel

1	To test the control panel display, use: . / " / / 2 3 .

7 Appendix

7.1 Fault Code List

Listed in the table below are all fault codes, their causes, and how an operator with knowledge of the system can solve the problem.

) 1)

Fault Code		Cause	Remedy
1-6	The text generated for fault 1-6 is configurable via the configuration program for individual Gas Detectors, e.g. “DETECTOR FAULT” or “IR PATH OBSCURED”.	Corresponds to a fault interval generated by the gas detector, the configurable text gives the fault description. See the gas detectors documentation for details.	Check the details view for the gas detector to obtain the current generated information from the 4-20 mA interface and check the gas detectors documentation for details.
7		The current on the Analogue M 4-20 interface is above 25mA	Verify that the detector connected to this interface is working properly. Refer to the Service & Maintenance manual:
8	+	The voltage has dropped below 22 VDC	Verify that the PSU is supplying the system with the correct voltage. Nominal 24 VDC.
9	) #	The Control M Gas reporting the fault has lost communicate with the BusCon M Gas	The Control M Gas reporting the error has been configured to be connected to a BusCon M Gas: 1. Check that the unit is connected to a BusCon M Gas and that there is no break on the cable. 2. If the connection is OK there is something wrong with the communication interface on the Control M Gas or the BusCon M Gas - try exchanging modules to identify the faulty module.
128	Explanation: Lost communication. The system has recognized a unit but lost contact.	Wrong type of unit	Switch to the correct unit
		Two units have the same address (a secondary fault appears)	Check address of the units.
		Defect unit	Replace the unit. Refer to the Installation manual or Service & Maintenance manual:
		Cable break or short circuit in a loop (a secondary fault appears)	Locate the cable break or short circuit. Refer to the Installation manual or Service & Maintenance manual:

Fault Code		Cause	Remedy
143	# Explanation: The communication with a unit is deficient	Two units have the same address	Check the unit addresses. Refer to the Installation manual or Service & Maintenance manual:
		Faulty unit	Replace the unit. Refer to the Installation manual or Service & Maintenance manual:
		Interference from external source	Locate interference source. If not possible to solve the problem, contact an authorized service office
149	(	Short circuit detected	Locate the short circuit and restore operation
152	$	Unit present but not configured	Verify if unit address is correct. Verify there is power to the module. Contact an authorized service office.
155	, ($	Earth fault on the positive conductor	Locate the earth fault. Refer to the Installation manual or Service & Maintenance manual:
156	, ($	Earth fault on the negative conductor	Locate the earth fault. Refer to the Installation manual or Service & Maintenance manual:
159		A cable break has been detected	Restore the cable
167	# (	Incorrect EPROM checksum	Contact an authorized service office
168		A module has restarted	If restarts happen repeatedly, contact an authorized service office
176	$	The configuration file is corrupt	Contact an authorized service office
		An error has occurred during downloading of the configuration file	
183	(-	Fault code generated when a module stops answering on channel 1 on the Backbone Bus	Contact an authorized service office
184	(.	Fault code generated when a module stops answering on channel 2 on the Backbone Bus	Contact an authorized service office
185	$	Communication has been lost with the controller of the system (Control M Gas with address 1)	Verify that the Control M Gas panel is operational. Verify that all cables are connected properly.
210	# / , $ $	Fault detected in the configuration	Contact an authorized service office
213	# $ (0	The configuration file's in the system are not the same everywhere	Synchronise the configuration files between all panels
		Central X Module Y settings in configuration file compared to DIP-settings are not OK.	Check configuration and DIP-settings.
216	1 $	The firmware in a module does not comply with the modules hardware version. (Fault code generated by the faulty module.)	Contact an authorized service office

Fault Code		Cause	Remedy
217	2 (-	The voltage from PSU 1 is too high. (Fault code generated by the Charger M modules.)	Adjust the voltage from the PSU 1
218	2 (.	The voltage from PSU 2 is too high. (Fault code generated by the Charger M modules.)	Adjust the voltage from the PSU 2
225	3	The XGas signal in the backbone is corrupt	Contact an authorized service office
230	+ (-	Too low voltage detected on the Backbone Bus Power Supply, channel 1. (Fault code generated by the Charger M modules.)	Contact an authorized service office
231	+ (.	Too low voltage detected on the Backbone Bus Power Supply, channel 2. (Fault code generated by the Charger M modules.)	Contact an authorized service office
232	1	Corrupt firmware	Contact an authorized service office
236	" $ $	The type of module found is different from the type configured	Change the module or the system configuration

7.2 Definitions of Terms

Alarm Condition	The state of the system when a gas alarm is detected.
Alarm Device	Device that is activated in case of a gas alarm, for example audible and optical alarms like bells, sirens and flashlights.
Analogue M 4-20	The Analogue M 4-20 is a transmitter module for a gas alarm system.
Backbone Bus External (BBE)	The main bus outside a Central cabinet used for communication between Modules and stretched central parts. It consists of two redundant RS485 channels, two 24 VDC power lines and the Basic Backup (BBU) signal.
Backbone Bus Internal (BBI)	The main bus inside a Central Cabinet used for communication between Modules. It consists of two redundant RS-485 channels, two 24 VDC power lines and the Basic Backup (BBU) signal.
Backbone Segment	A Backbone Bus may be split in several Segments. Power feeding can be separate for each segment by using one BusCon M Gas per segment. Communication can be isolated between segments by using Isolator Modules.
Basic Backup Signal (BBU)	A signal in the Backbone Bus that is used for transmitting the Central's alarm status. The signal is only used when a module in Managed mode loses communication with its Controller Module.
BusCon M Gas	The BusCon M Gas is a connection modul for a gas alarm system.
Cause/Effect	The Cause/Effect program defines how the inputs and outputs of the system should react.
CCP Platform	An umbrella name for all the Modules and Devices that can be connected together, e.g. “the Control M Gas module is a member of the CCP Platform”.
Central	A Central is a complete system that can operate autonomously; monitor its detectors and inputs, activate its outputs and display its faults and alarms. A central can only have one Backbone Bus.
Central Cabinet	Enclosure to contain a complete or part of a central.

Control Module	The Control M Gas and the Control M X can all act as Controller Modules, i.e. be in Controller Mode.
Control Panel	The Control M Gas can act as a Control Panel, i.e. it has an HMI and the rights to manipulate and supervise the System.
Controller Mode	Control Modules can run in Controller Mode within a central. Control Modules can also be in managed mode, that is being a module that is managed by the master. All other modules are always running in managed mode.
Controller Module	A Control Module that is in Controller Mode in a Central or System.
DCS	Distributed Central System (see also Stretched Central).
Detector	A device capable of detecting gas alarms.
Disable all outputs	This mode is used for inhibit the detectors from generating the Alarm Condition but the alarms are displayed on the Control Panels to prove that the tested Detectors are operational.
Disablement	Disablement of devices such as a Zones or Detectors. Alarms from disabled devices will be inhibited.
External Communication	Communication to external entities is called external communication, using for example MODBUS or NMEA protocols.
External Control	Outputs used to control external equipment, for example ventilation.
Fault Condition	The state of the system when a fault is detected.
I/O Module	A module with inputs and/or outputs. I/O modules always run in Managed Mode, that is they must be managed by a Controller Module.
I/O Pin or I/O Signal	An I/O Pin or an I/O Signal is a logical signal, compare to terminal.
Inter-central Communication	Communication between centrals is called inter-central communication.
Interface Channel	A communication channel used to interface the systems with external devices. Interface channels can be configured to communicate on different protocols.
Managed Mode	The opposite of Controller Mode. All modules that are managed by a Controller Module are in Managed Mode.
Mode of operation	Modules in the System can take on different roles. Connected to the Backbone Bus they can be in: • Central Controller Mode (Master) • Central Managed Mode Modules connected to the System Bus can be in: • System Controller Mode (Master) • System Managed Mode
Module	A module that is a part of the Platform, that is can be used to build Centrals. Modules within the platform generally supply a Backbone Bus interface. Controller Modules also have an Interface.
Module Address	Module Addresses are set via DIP switches on the Modules.
Mute	Acknowledge and silence the local buzzer and in some cases the alarm devices.
PA	Public Addressing.
Power Boost Loop	The Power Boost Loop is a subsystem in the CCP Gas system.
Power Boost M	The Power Boost M is designed to distribute power and supervise connections in a gas alarm system.
Power Boost xGas (Pbx)	System function for transfer of xGas status between the Power Boost modules on a Power Boost Loop (Signal name PbxGas) and the modules connected to the Power Boost module on the internal Backbone Bus (BBI).

Power Output	Output providing power supply, normally used to power external devices.
Pre-Alarm Condition	A condition preceding the Alarm Condition to give early warning for potentially dangerous situations.
Programmable Output	Output which signal behaviour is configurable via the Configuration Program.
PSU	Power Supply Unit.
Redundancy	Refers to the quality or state of being redundant, that is exceeding what is necessary or normal. In the System the term is used to describe backup functionality like in Controller Modules.
Relay	Electrically operated switch output, normally providing C/NO/NC contacts for connection of signal receiver.
Safe State	Modules enter 'safe state' when they detect system faults. Modules in Safe State put their I/O in a predefined state and stop all communication in order to avoid disturbing system integrity.
SCS	Single Central System.
Stretched central (DCS)	A central that is physically distributed to two or more physical locations. One location may or may not supply power to another location (segmented) and two locations may or may not have isolated communication lines.
Terminal	A Terminal is a physical point of connection, compare I/O pin.
USB	Universal Serial Bus, a communications bus that may be used to connect flash memories, keyboards, mice or other devices.
Warning Condition	The state of the system when a warning is detected. Warnings are not as serious as faults and only of informative nature, for example that a Gas Detector is in need of calibration.
xGas	The Backbone Bus contains a signal, xGas, which will be activated by any module that detects a gas alarm.
Zone	A group of detectors located in a geographical area.

8 Quick Guide for the Control M Gas

In case of Gas alarm or Fault alarm

Read the instructions displayed on the screen and take the appropriate actions.

Note! Only the main actions are described beow.

Further instructions for the control panel can be found in the Operations chapter in the User Guide.

Mute

1 Press to mute the alarm indication.

Access level 2 is required to be able to operate the Mute button.

Note! Pressing the Mute button may inhibit outgoing alarm functions and silence alarm devices. Ensure proper actions are taken to verify the cause of alarm.

Reset

1 Press to reset the current alarm.

Note! Alarms cannot be reset if the alarm condition remains.

Examples of Disablement

Disabling Zones or Detectors

Note! Disabling a device will suppress further gas alarms and/or faults to be displayed in the panel.

1 Select *Menu* > *Zones* or > *Gas detectors*.

2 Choose zone or detector. Press *Options*.

3 Select *Disable* or *Timer disablement*. Press *Continue*.

4 Confirm.

Reconnecting a Disablement

All disablements in the system are presented in the disablement list. Any enablement is made from this list.

1 Select menu *Menu* > *Disablement*.

2 Choose the disablement you want to cancel. Press *Options*.

3 Select *Reconnect* and press *Continue*.

G005177

Consilium

Index

A

About testing 23
Access levels, Custom specific restrictions 14
Access levels, Description of 13
Alarms and pre-alarms menu 9

C

Control panel display, Testing 23

D

Dimmer button, Control Panel 7
Disablement list 19
Disablement, Acknowledgement 19
Disablements menu 10

F

Fault alarm, Information in the Control Panel 17
Fault alarm, Mute 17
Fault alarm, Reset from the Fault list 18
Fault indicator, Control Panel 7
Fault alarm, Reset 18
Fault alarm, Reset all faults 18
Faults and warnings menu 9

G

Gas alarm indicator, Control Panel 7
Gas alarm, Information in the Control Panel 16
Gas alarm, Reset 16
Gas detection system, Access levels 13
Gas detection system, System description 5
Gas detectors menu 10

H

How to navigate the menu system 8

L

LED test 23
Login, Access codes 14

M

Mute button, Fault alarm 17
Mute button, Control Panel 8

N

Navigation and command keys, Control Panel 7

P

Permanent disablement 19
Permanent disablement of gas detectors 20
Permanent disablement of a zone .....
Power indicator, Control Panel .....
Pre-alarm list .....

R

Reconnecting all .....
Reconnecting disabled detectors .....
Reconnecting disabled zones .....
Reset button, Fault alarm .....
Reset button, Gas alarm .....
Reset button, Control Panel .....

S

Service menu .....

T

Test the control panel display .....
Timer disablement .....
Timer disablement of a zone .....
Timer disablement of gas detectors .....
Top menu .....

Z

Zones menu .....

Global Service and Support

Own companies

Sales- and service representatives

Consilium is constantly increasing and improving its global sales and service organisation in order to provide our customers with the most competent service and support. Today Consilium has established own companies in 16 countries plus sales and service representatives in more than 50 countries. You will find updated contact information on our web-site www.consilium.se.

Consilium

www.consilium.se

Manual

Consilium

Salwico GS5000

Gas Detection System

Installation Manual

Consilium Marine & Safety AB
Fire & Gas Marine Division
Phone: +46 31 710 77 00
Fax: +46 31 710 78 00
E-mail: Service: service@consilium.se
Spares: spares@consilium.se

Consilium Marine & Safety AB
Navigation Division
Phone: +46 8 563 05 100
Fax: +46 8 563 05 199
E-mail: Service, APT: service-navigation@consilium.se
Spares: spares-navigation@consilium.se

The contents of this document are subject to revision without notice due to continued progress in methodology, design and manufacturing. Consilium assumes no legal responsibility for any error or damage resulting from the usage of this document.

January 2014
Document no. 5103018_Salwico GS5000_Installation Manual_M_EN_2014_F
Part no. 5103018

© Copyright 2014, Consilium Marine & Safety AB

1 Introduction 1

1.1 About this manual 1

1.2 Symbols used in the manual 2

2 Gas Detection System 3

2.1 System Description 3

2.2 System Block Diagram 3

2.3 System Data 5

3 Installation 7

3.1 Prerequisites for Installation 7

3.2 Mechanical Installation 7

3.2.1 Installation order 7
3.2.2 Control Panels 7
3.2.3 Gas Detectors 7
3.2.4 Mounting of modules 7

3.3 Electrical Installation 8

3.3.1 Cable requirements 8
3.3.2 Cable lengths 10
3.3.3 Connection Power Boost Loop 12
3.3.4 Connection Analogue M 4-20 13
3.3.5 Earth connections 15
3.3.6 Test the cables 17
3.3.7 Setting the address 21
3.3.8 Setting function or mode for modules 21
3.3.9 Electrical installation, central equipment 21

4 Configuration 23

4.1 Uploading a configuration file to the gas detection system 23

4.1.1 Uploading a configuration file from the USB memory stick 23

4.2 Downloading a configuration file from the gas detection system .. 24

4.2.1 Downloading a configuration file to a USB memory stick 24

5 Verification 27

5.1 Prerequisites for Verification .....

5.2 Verification of Power Boost loops .....

5.3 Testing of System Parts .....

5.3.1 Prerequisites for Testing .....
5.3.2 Test the control panel display .....

5.4 Trouble shooting .....

5.4.1 Wrong number of system modules/gas detectors .....
5.4.2 Cable break .....
5.4.3 Earth fault .....

5.4.4 Short circuit 30
5.4.5 Muting faults 30
5.4.6 Reset faults 30
5.4.7 Update firmware 31
5.4.8 Copy the system log to a USB memory stick 31

6 Commissioning Requirements 33

6.1 Prerequisite 33

6.2 Loop requirements 33

6.3 Part A: Power Boost loop configuration 33

6.4 Part B: Loop status 33

6.5 Part C: Central status 34

6.6 Summary 34

7 Gas Detection Installation Guidelines 35

7.1 Gas Detectors Installation 35
7.1.1 General comments when installing gas detectors 35
7.1.2 Location of sensors 35
7.1.3 IR detectors 36
7.1.4 Catalytic detectors 36
7.1.5 Electrochemical detectors 37
7.1.6 Electrical siren 37

7.2 Cabling and Electrical Installation 37
7.2.1 Cable types 37
7.2.2 Cable protective tubes of metal 37
7.2.3 Cable protective tubes of plastic 38
7.2.4 Cabling 38
7.2.5 Cable inlets to equipment 39
7.2.6 Fixing of cables 39
7.2.7 Markings 39
7.2.8 Cable ends 40
7.2.9 Protective earthings 40

8 Calibration Instruction for Salwico GD True IR .....

8.1 Preliminaries .....

8.2 Calibrating the sensor (Zero calibration) .....

8.3 Calibrating the sensor (Span calibration) .....

8.4 Reconnecting disabled detectors .....

9 Calibration Instruction for Salwico GD .....

9.1 Preliminaries .....

9.2 Calibrating the sensor (Zero calibration) .....

9.3 Calibrating the sensor (Span calibration) .....

9.4 Reconnecting disabled detectors 49

10 Calibration Instruction for Salwico ST200 and Salwico ST600EX 51

10.1 Preliminaries 51

10.2 Prerequisites 52

10.3 Calibrating the sensor (Zero calibration) 53

10.4 Calibrating the sensor (Span calibration with test gas) 53

10.5 Reconnecting disabled detectors 54

11 Calibration Instruction for Salwico ST600EX-IR and Salwico ST700IR 57

11.1 Preliminaries 57

11.2 Prerequisites 57

11.3 Calibrating the sensor (Zero calibration) 58

11.4 Calibrating the sensor (Span calibration) 59

11.5 Reconnecting disabled detectors 60

12 Calibration Instruction for Salwico ST400 H2S 61

12.1 Preliminaries 61

12.2 Prerequisites 62

12.3 Calibrating the sensor (Zero calibration) 63

12.4 Calibrating the sensor (Span calibration) 63

12.5 Reconnecting disabled detectors 64

13 Calibration Instruction for Salwico ST400 O2 65

13.1 Preliminaries 65

13.2 Prerequisites 66

13.3 Calibrating the sensor (Span calibration) 67

13.4 Calibrating the sensor (Zero calibration) 67

13.5 Reconnecting disabled detectors 68

14 Appendix 69

14.1 Central Unit Terminal & Cabling Layout 69

14.2 RS485/PB485 Termination 71

14.2.1 General Recommendations for Installation of RS485 71

14.2.2 Application Examples for Installation of RS485 71

14.3 Fault Code List 72

14.4 Definitions of Terms 75

Index 78

1 Introduction

1.1 About this manual

This manual is intended for personnel installing a Salwico GS5000 gas detection system.

NOTE!
This guide is valid for Control panel software versions beginning with version 1.0.0.

Chapter Gas Detection System, page 3 gives an overview of the system.

Chapter Installation, page 7 describes the electrical installation process of system modules and detectors. The installation engineer does not need to have any previous knowledge of this particular system to be able to perform an installation.

Chapter Verification, page 27 describes how to test the installed system. After the installation is completed, the system is verified, which must be performed by a person with good knowledge of the various functions. This chapter also includes verification and troubleshooting.

Chapter Commissioning Requirements, page 33 describes the steps to be taken by the installation organisation before a commissioning engineer can be sent from the commissioning organisation.

Chapter Gas Detection Installation Guidelines, page 35 gives general recommendations for installing a gas detection system.

Figure 2. Cabinet LNG GDS for Salwico gas detection systems

Risk of serious or fatal injury to the user, and/or severe damage to the product, if the instructions are not followed.

Risk of personal injury and/or damage to the product if the instructions are not followed.

!
Risk of minor or moderate personal injury. Risk of equipment damage, loss of data, extra work, or unexpected results, if the instructions are not followed.

Note symbols alert you to important facts and conditions.

"
Tip symbols direct you to specific instructions, such as where to find additional information and tell you how to perform a certain operation in an easier way.

2 Gas Detection System

2.1 System Description

This Gas detection system is a state-of-the-art addressable detection system designed to meet marine, industrial and transport requirements. Special care is given to ergonomics and user-friendliness with its logical and intuitive operator panel.

2.2 System Block Diagram

The following figures shows some typical systems with connected components, see Definitions of Terms, page 75 in the Appendix for explanation of terms and abbreviations.

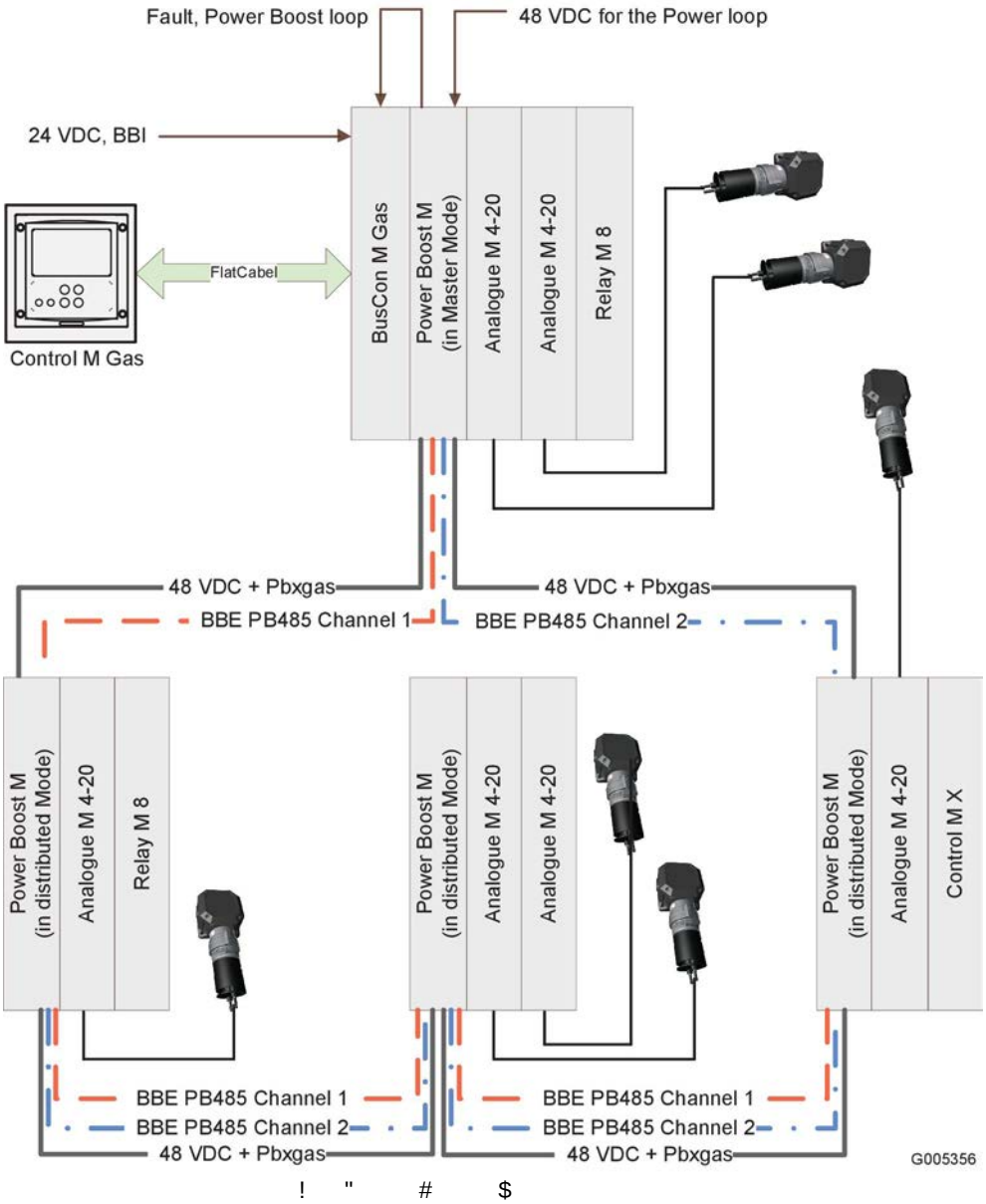

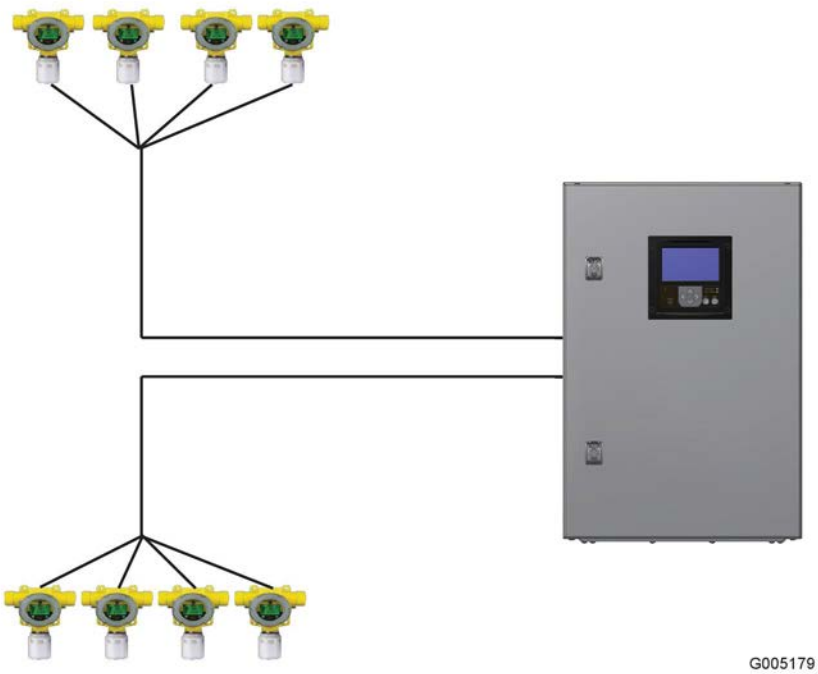

Figure 4. An overview of a Salwico Gas detection system

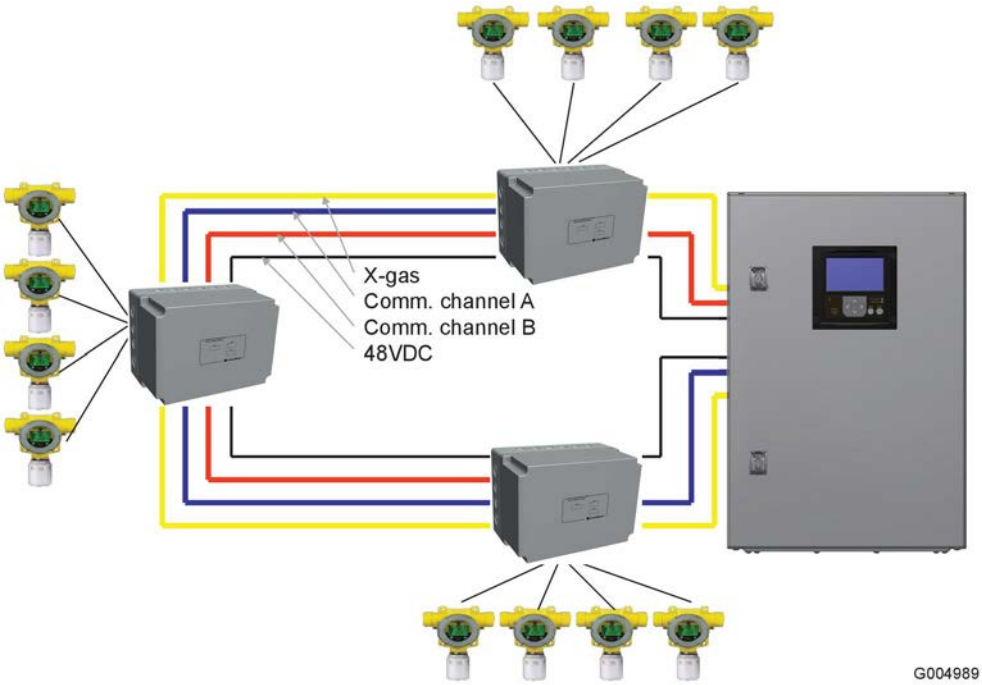

Figure 5. An overview of a distributed Salwico Gas detection system

2.3 System Data

' ! & (((

System Data	Specifications
Supply voltage	Depends on PSU
Power consumption. Depending of system configuration.	
Internal system voltage	22–30 VDC
Central panel ingress protection	IP55
Number of inputs per module, Analogue M 4-20	4
Number of modules in one Salwico GS5000 gas detection system	max 125
Number of Control M Gas in one Salwico GS5000 gas detection system	max 10
Number of Analogue M 4-20 in one Salwico GS5000 gas detection system	max 64
Number of Relay M 8 in one Salwico GS5000 gas detection system	max 16
Number of zones in a system	max 255
Communication parameters for the external system channel	RS485, 38400 Baud, Odd parity, 8 data bits
Number of individually defined effects (output expressions) per single central	Maximum 1000

NOTE!
System boot-time is kept to a minimum during normal operation, but it can be extra-long after a new installation, commissioning or major maintenance work (depending on the configuration of the data definition file).

Hint!
For detailed requirements, refer to the data sheets.

3 Installation

3.1 Prerequisites for Installation

CAUTION!
The installation of the Gas detection system must be performed according to SOLAS and ICS requirements.

The different parts of the system, the control and system modules, should first be mechanically installed. The different gas detectors are thereafter electrically installed and set up according to the definition of the detectors and drawings.

The cables must be tested separately before the detectors are connected to the system module. This eliminates any problem with the cables and the electrical installation of the detectors.

The installation is completed with the electrical installation of the the control and system modules.

3.2 Mechanical Installation

3.2.1 Installation order

Install the control panel according to the drawings. The Control M Gas is delivered in a cabinet. Separate drawings are delivered with the system.

3.2.2 Control Panels

The external control panels are delivered in cabinets (IP55) for wall or console mounting. Separate drawings are delivered with the system. Install the panels indoors in areas in 0–95% RH non-condensing conditions and within a temperature range of -5ºC to +55ºC.

3.2.3 Gas Detectors

Gas detectors are connected to Analogue M 4-20 modules.

The mechanical installation of different types of gas detectors are described in their respective data sheets. Some guidelines on where to place detectors are given in Location of sensors, page 35.

3.2.4 Mounting of modules

Modules are mounted on a 35 mm DIN rail inside a cabinet.

Mount the modules horizontally on the 35 mm DIN rail.

- Mount one module support on each side.
- Squeeze the whole package together and tighten the screws on the supports.

3.3 Electrical Installation

3.3.1 Cable requirements

Backbone Bus External (BBE), Channel 1 & 2

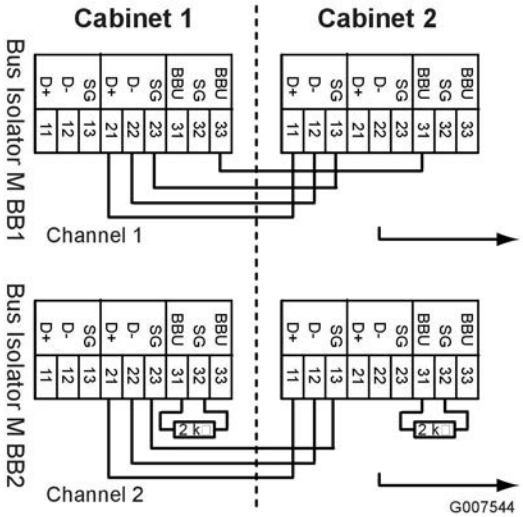

) *

The cables connecting from the backbone bus to the control panels or stretched central part must meet the following requirements:

- Min 2 x 2 x 0.3 mm^2, twisted pair shielded
  (RS485 + backup signal, one conductor)

  NOTE!
  The backup signal is only needed for one channel.

- Max allowed cable length is 700 m
- Optional: Power supply (24 VDC) 1 x 2 x 0.75 mm^2
  Refer to the system connection drawing

NOTE!
Channel 1 and Channel 2 should be routed separately for improved safety if both channels are used.

Power Boost Loops

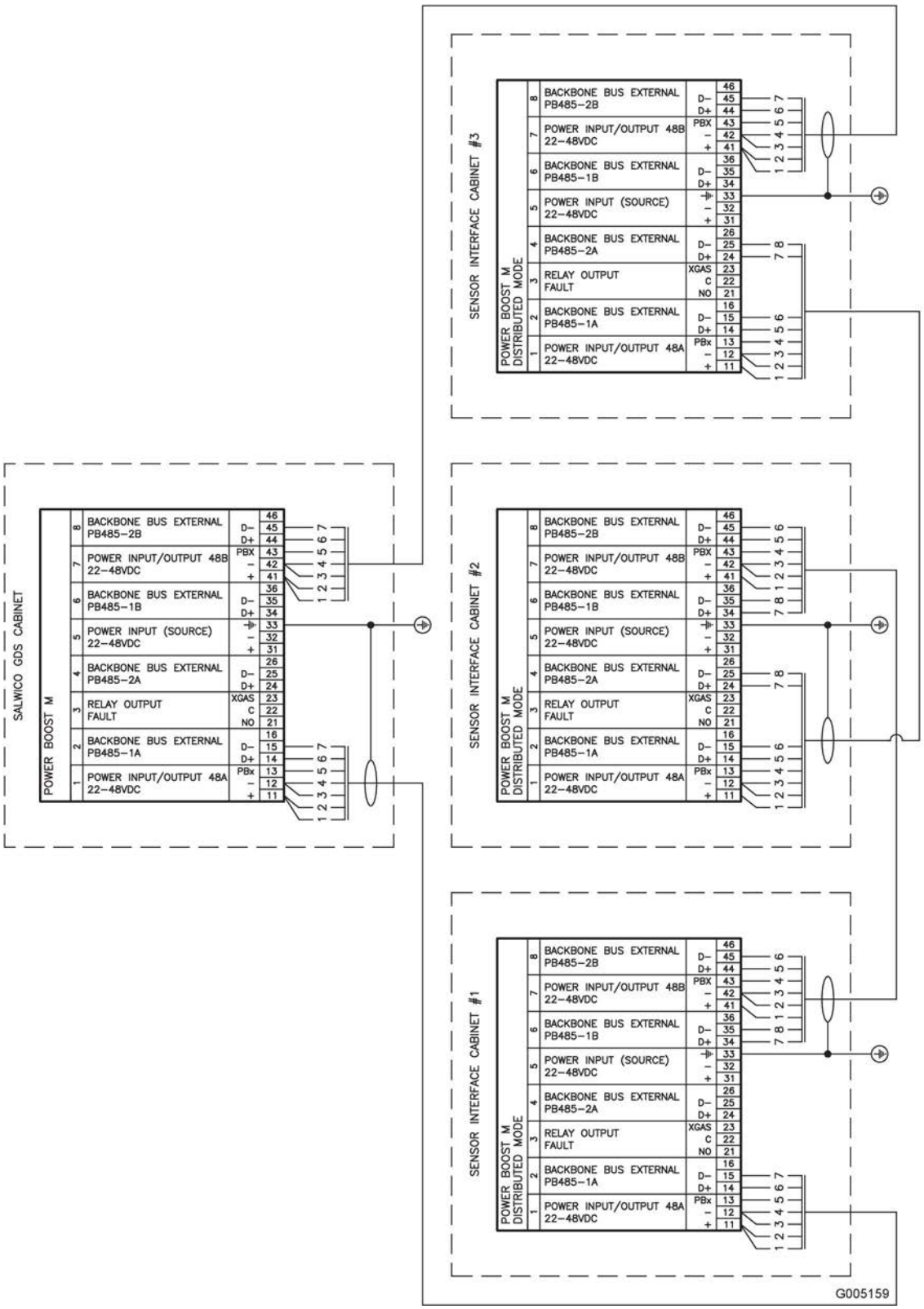

+ # $

Power Boost Loop cables must meet the following minimum requirements. We refer to current regulations for the rest of the specification.

- Minimum 4 x 2 x 0.75 mm^2, twisted pair shielded
- Recommended 4 x 2 x 1.5 mm^2, twisted pair shielded

NOTE!
Wires for communication (PB-485) must be twisted over its entire length.

Cables between Analogue M 4-20 and gas detectors

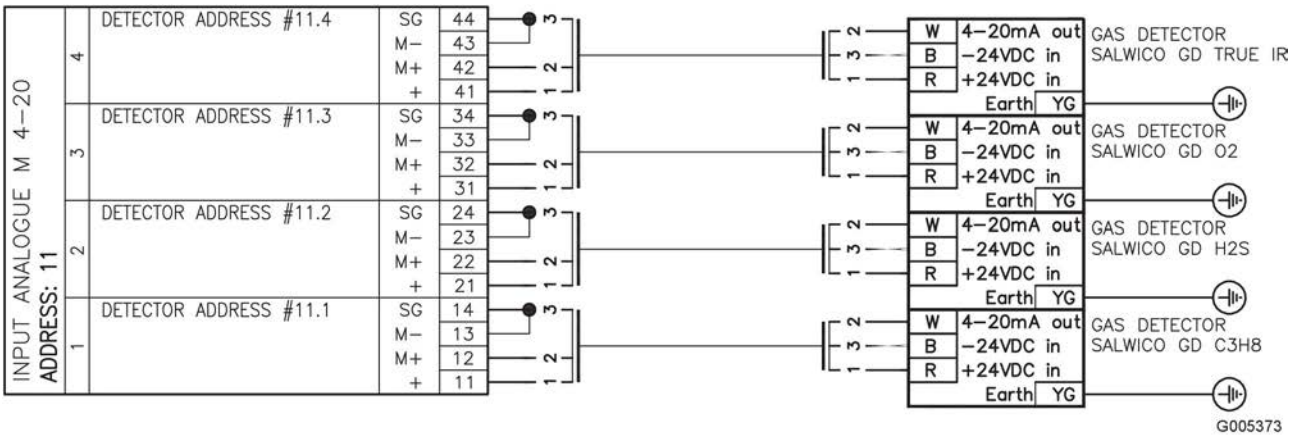

, - % . (

Cables between Analogue M 4-20 and gas detectors must meet the following minimum requirements. We refer to current regulations for the rest of the specification.

- Minimum 2 or 3 core x 0.75 mm^2, shielded
- Recommended 2 or 3 core x 1.5 mm^2, shielded
- Max allowed cable length is 400 m

3.3.2 Cable lengths

CAUTION!
Never exceed the recommended cable lengths.

The cable length depends on three parameters:

- cable type
- shielded or unshielded cable
- power consumption

A cable is considered shielded if the shielded part is more than 10% of the cable's total length.

Cable resistance

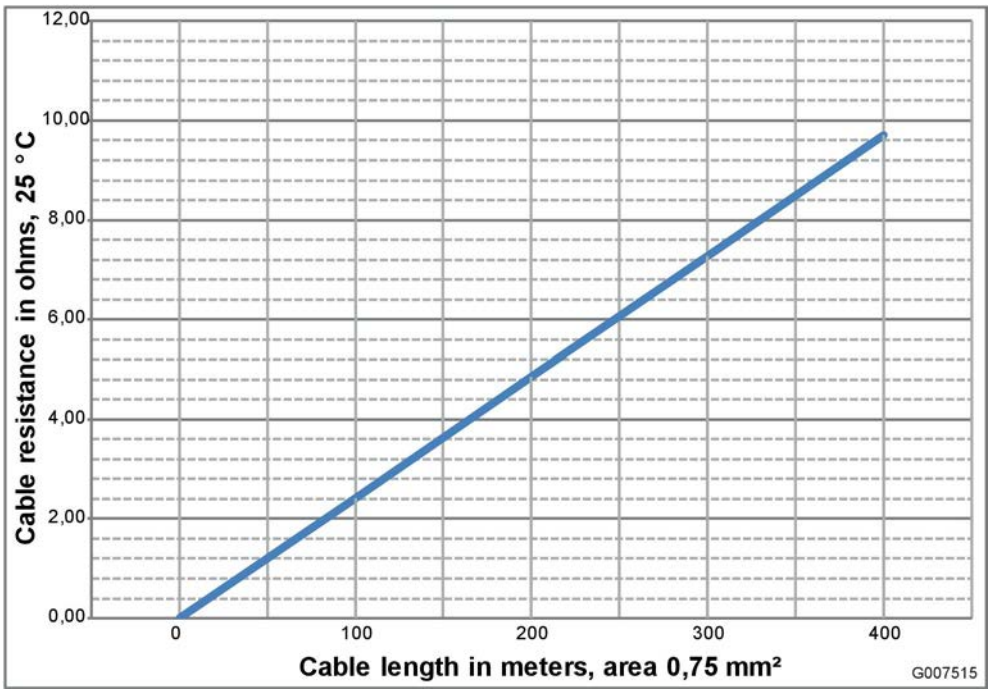

/ 0 ! (1 + & 2

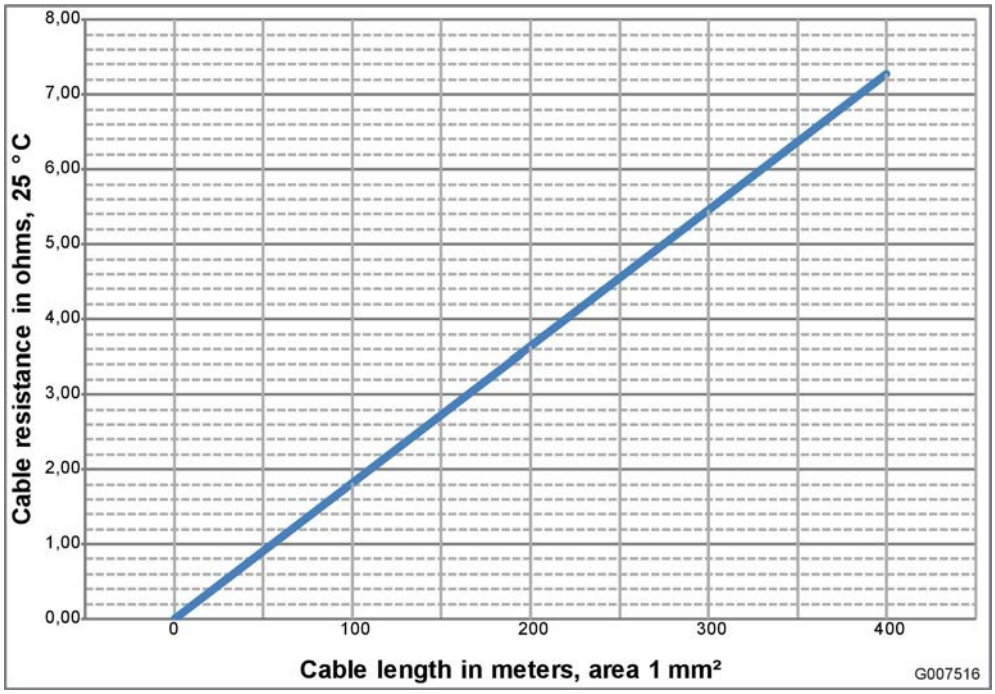

(0 ! 2

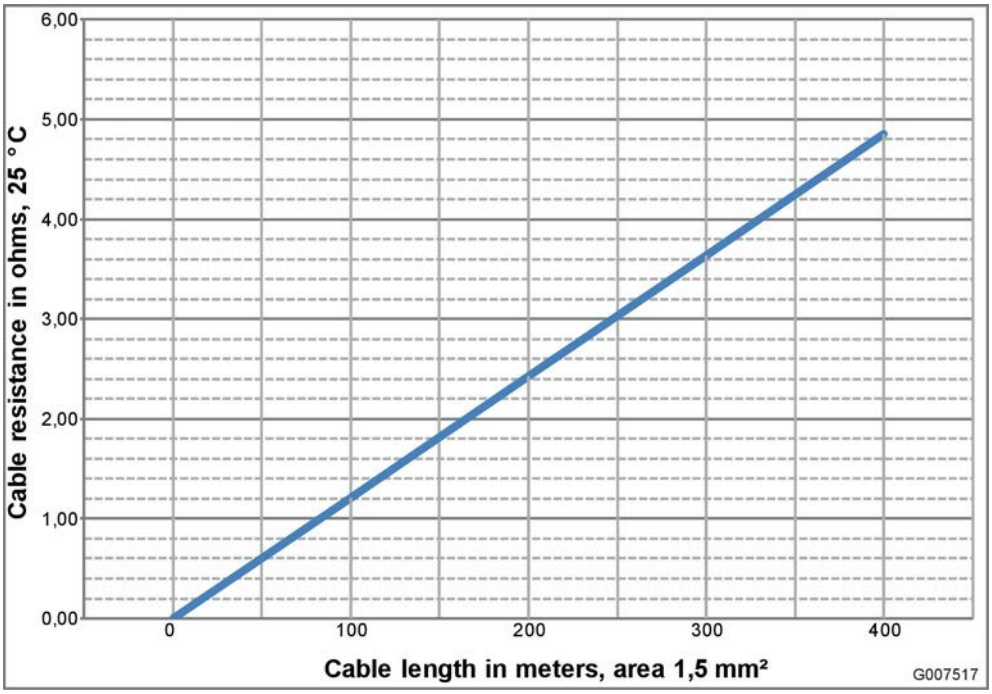

Figure 11. Resistance in cables with area 1,5 mm²

' ' ') 2 $ 3 #

A Power Boost loop may contain max 20 gas detectors divided on max 5 Power Boost segments.

The max load is 38 W per Power Boost loop segment.

"
Please contact Consilium for advice concerning cable lengths.

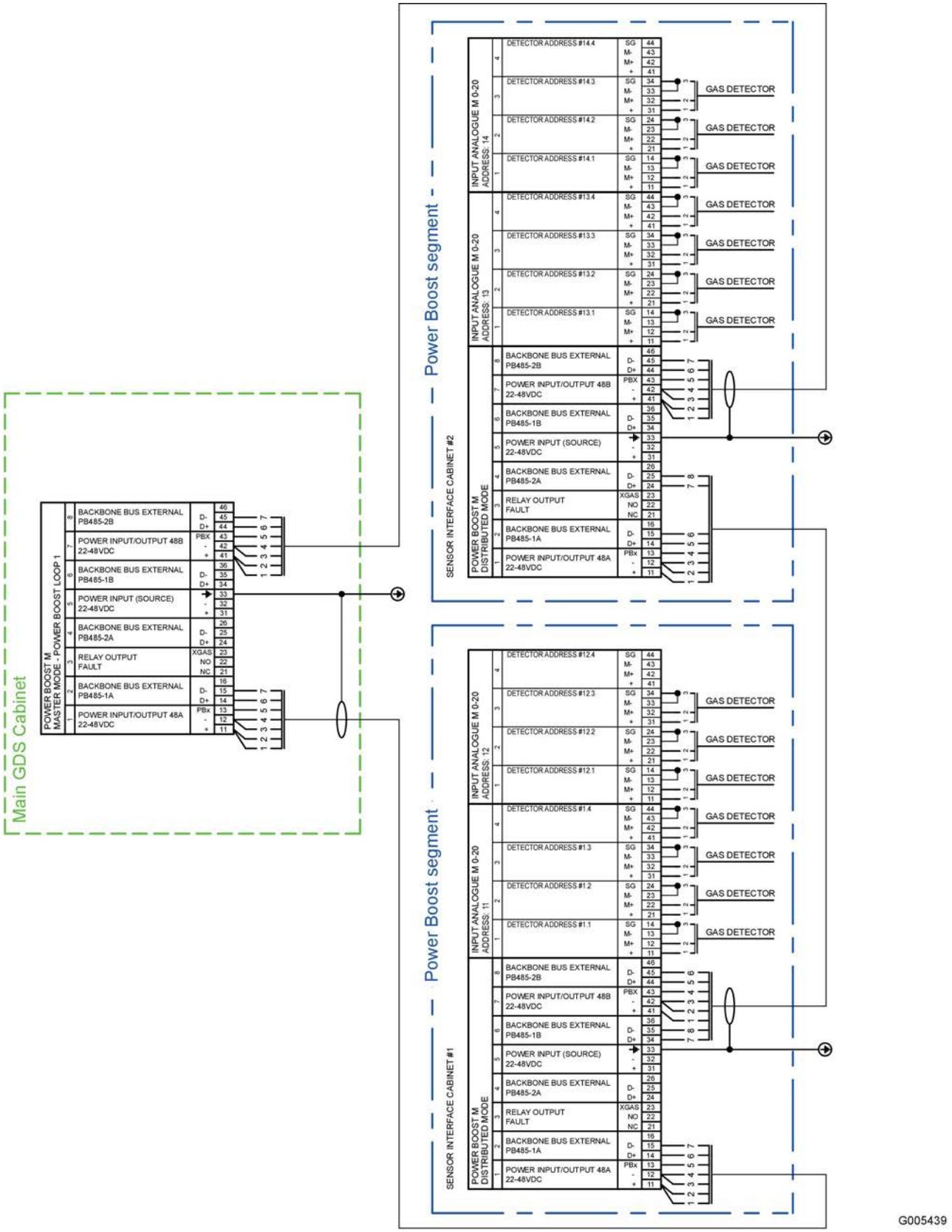

Figure 12. Connection example with Power Boost segments

' ' , & + , 4 5

The information about the electrical installation of each type of gas detector is provided in its respective data sheet and/or connection drawing.

CAUTION!
Do not remove protection cap from the gas detectors until all polluting activities (such as construction work and painting) are finished and the area has been cleaned.
For further information refer to Gas Detectors Installation, page 35.

Connection Examples

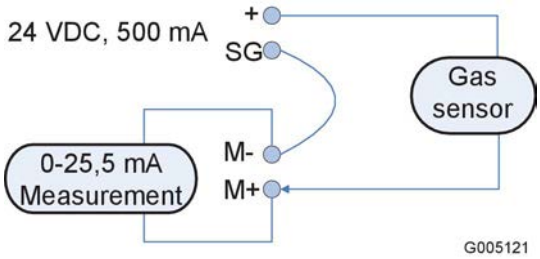

.

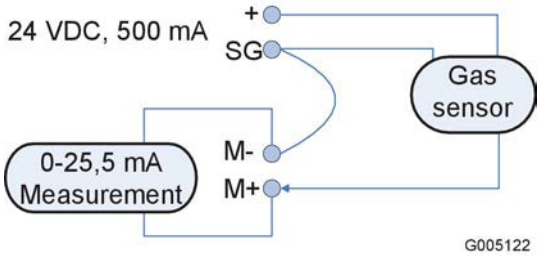

% . 1

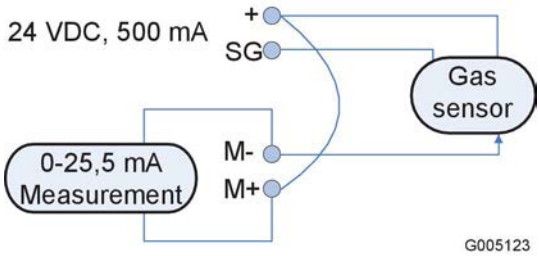

& . 1 3

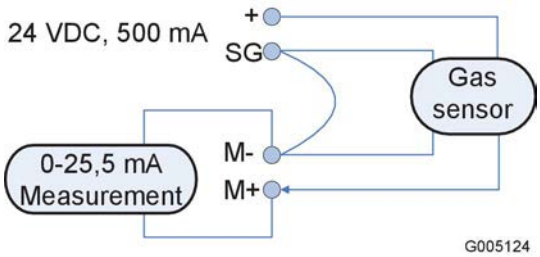

) % .

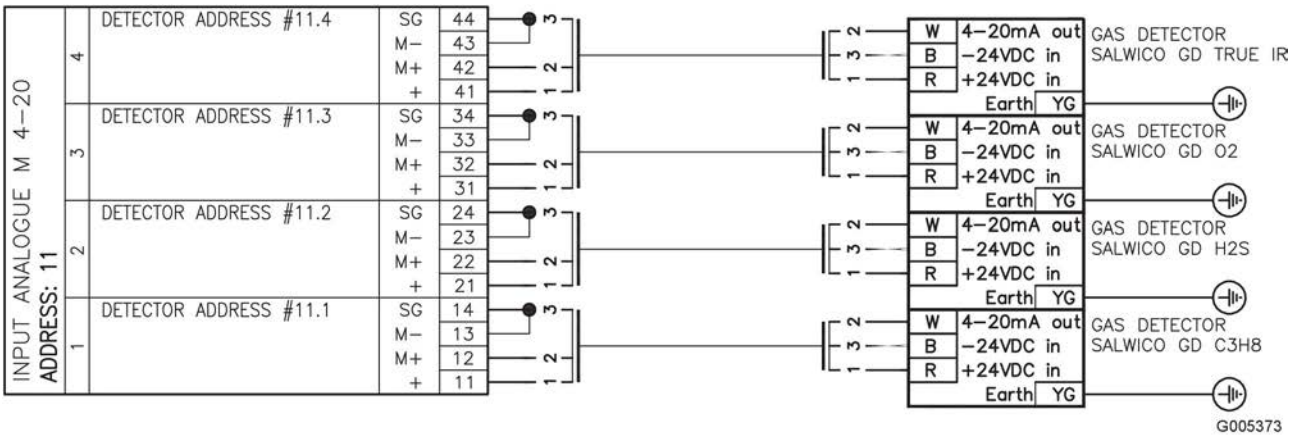

Figure 17. Connection example for Analogue M 4-20 and detectors

6 &

In order to avoid a massive start-up current in the system the Analogue M 4-20 module delays the voltage output (+, SG) in the transmitter interfaces upon start-up:

- Transmitter interface 1, 0 ± 10 ms
- Transmitter interface 2, 125 ± 10 ms
- Transmitter interface 3, 250 ± 10 ms
- Transmitter interface 4, 375 ± 10 ms

The voltage outputs are delayed based on the DIP address:

- DIP 31, 500 ms
- DIP 32, 1000 ms
- DIP 33, 1500 ms
- etc

DIP switch addresses below 31 will NOT be delayed.

' ' 7

The entire length of the field cabling connected to a unit should be screened /shielded. This screen/shield should be connected to a low noise instrument (clean) earth at a single end. (The screen/shield can be connected to the unit's earth in the junction box, provided that this is isolated from all other earths/grounds.)

See the following example Figure 18. how the cable screen should be connected to avoid an earth loop.

= Wires marked with this symbol in the drawing must be twisted over its entire length

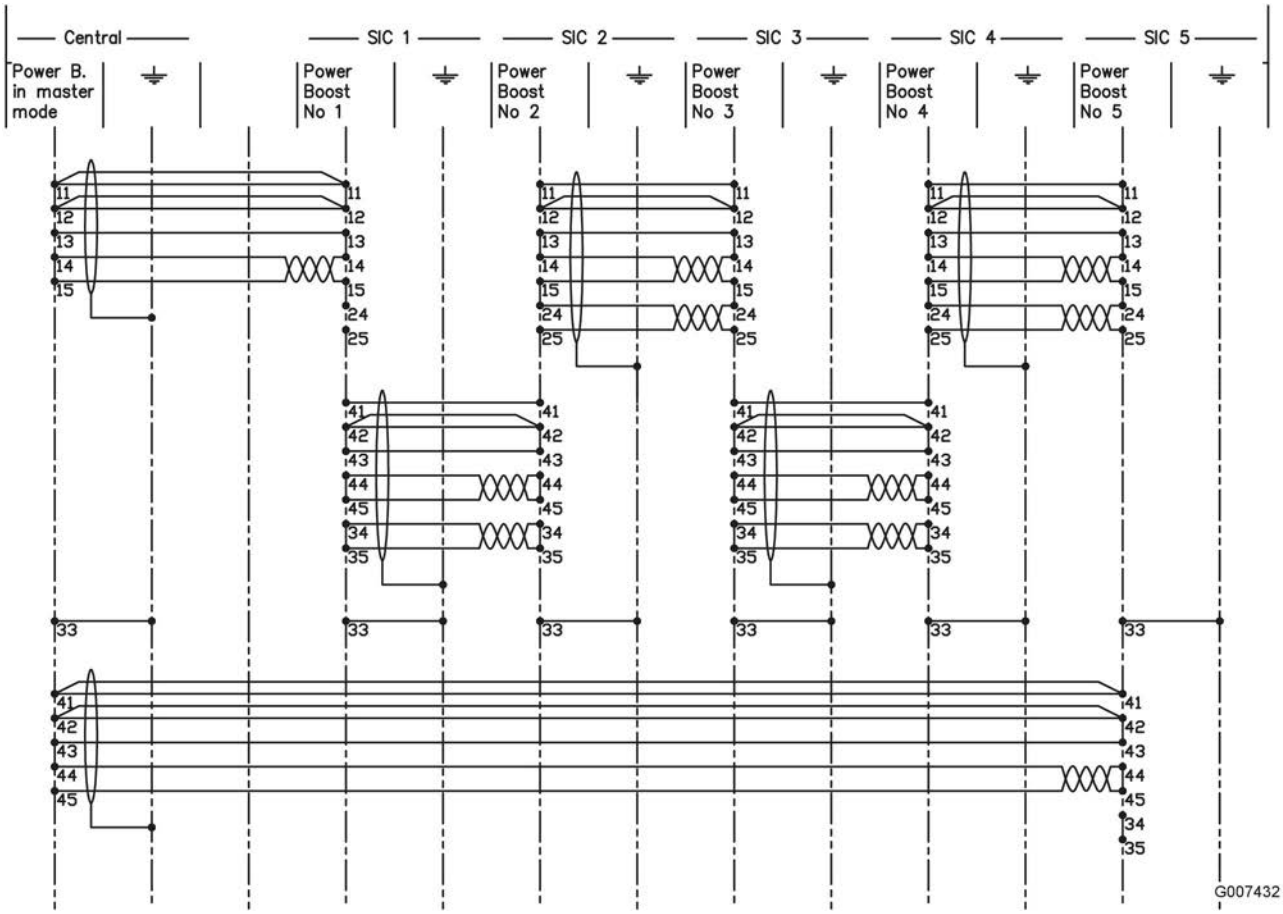

Figure 18. The cable screen connected to avoid an earth loop.

!

The screens/shields of field cabling should not be connected in a manner that creates earth loops or that will result in the screens/shields carrying large currents from the equipment.

The illustration in Figure 19. shows an example on how the cable screens should be connected.

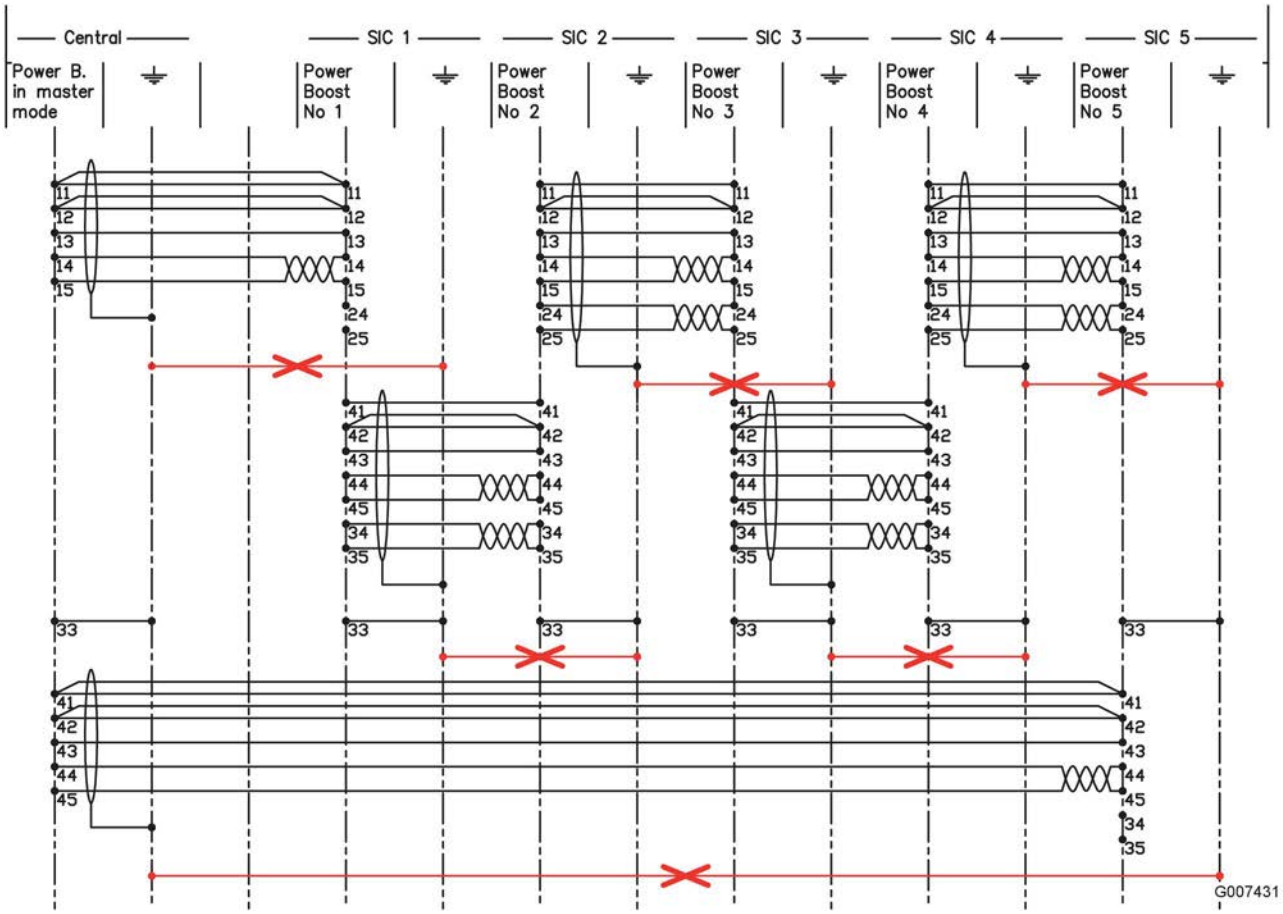

Figure 19. This example shows some incorrect connections of the cable screens

The use of a single, screened/shielded cable for each field device (detector) ensures good screening/shielding and reduces crosstalk. Cabling arrangements that use a single cable to connect a number of field devices compromise screening and increase the potential for crosstalk. Such arrangements should only be employed if the electrical installation design authority is confident that this will not adversely affect the reliability or performance of the system.

' ' 8

' ' 8 9 (%

!

When gas detectors are connected, it is not allowed to use an insulation tester with a voltage exceeding 30 V.

+ 2) $ -

Connect an ohm meter between the PBx terminals as shown in the following figure.

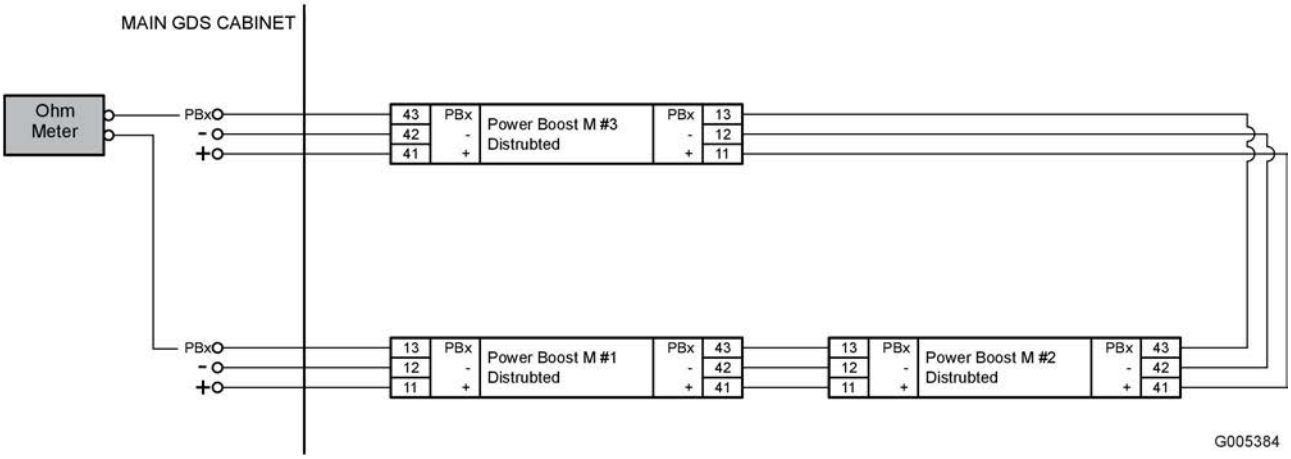

Figure 20. Test for cable break between the PBx terminals

+ 2 4

Connect an ohm meter between the - terminals as shown in the following figure.

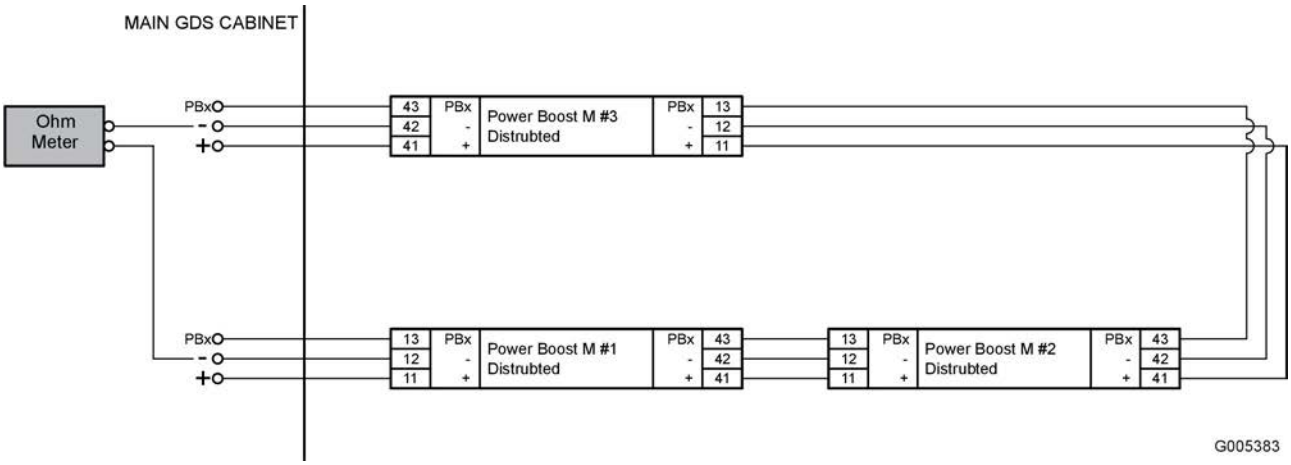

Figure 21. Test for cable break between the - terminals

+ 2 :

It is not possible to measure the positive side because of the short circuit isolators. Install a temporary jumper in order to do this measurement.

;

The measured value depends on the length and type of the cable. Always compare to values provided by the manufacturer of the cable.

An infinite resistance indicates a cable break.

3 %

"

The control panel indicates if modules or gas detectors are missing.

3.3.6.2 Test 2: Test for short circuits

CAUTION!
When gas detectors are connected, it is not allowed to use an insulation tester with a voltage exceeding 30 V.

Measure the resistance between the + terminal and the - terminal

Connect an ohm-meter between the two terminals, as shown in the following figure.

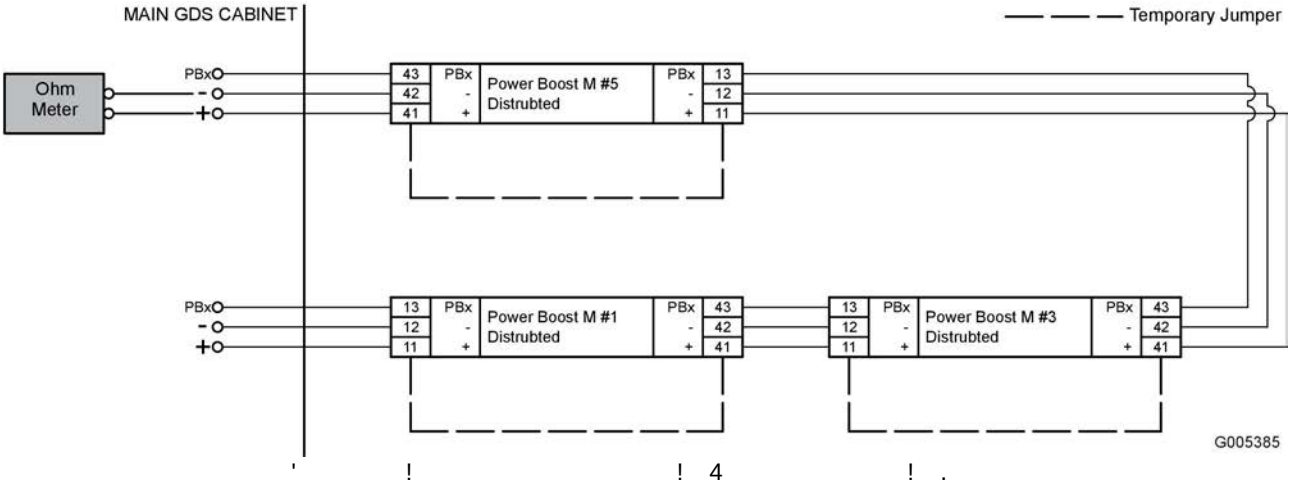

Measure the resistance between the PBx terminal and the - terminal

Connect an ohm-meter between the two terminals, as shown in the following figure.

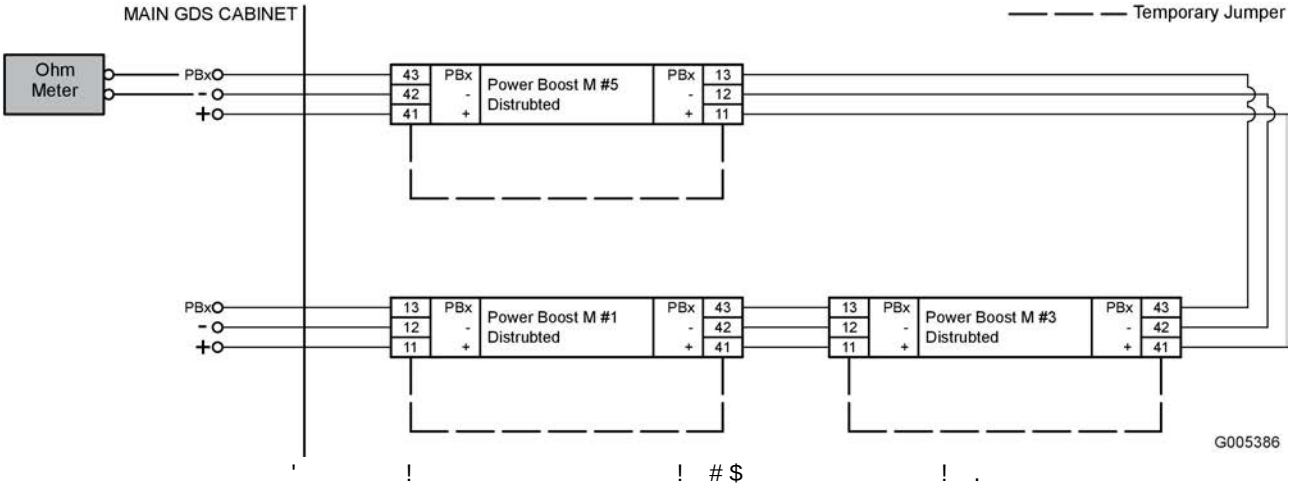

Measure the resistance between the PBx terminal and the + terminal

Connect an ohm-meter between the two terminals, as shown in the following figure.

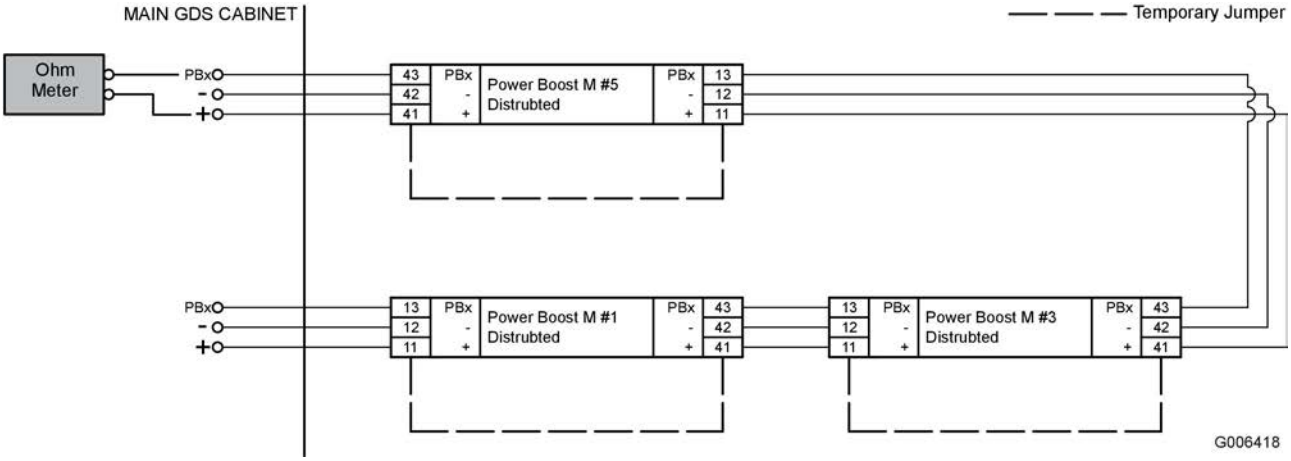

Figure 24. Test for short circuit between the PBx terminal and the + terminal

;

The measured value should be more than 100 kOhm.

3

"

The panel will report “no answer com channel A/B” for the affected units.

' ' 8 ' '9 ((

!

When gas detectors are connected, it is not allowed to use an insulation tester with a voltage exceeding 30 V.

+ 2 : 4
(

Connect the ohm meter between the + terminal and earth as shown in the following figure.

Measure and repeat the procedure for the - terminal.

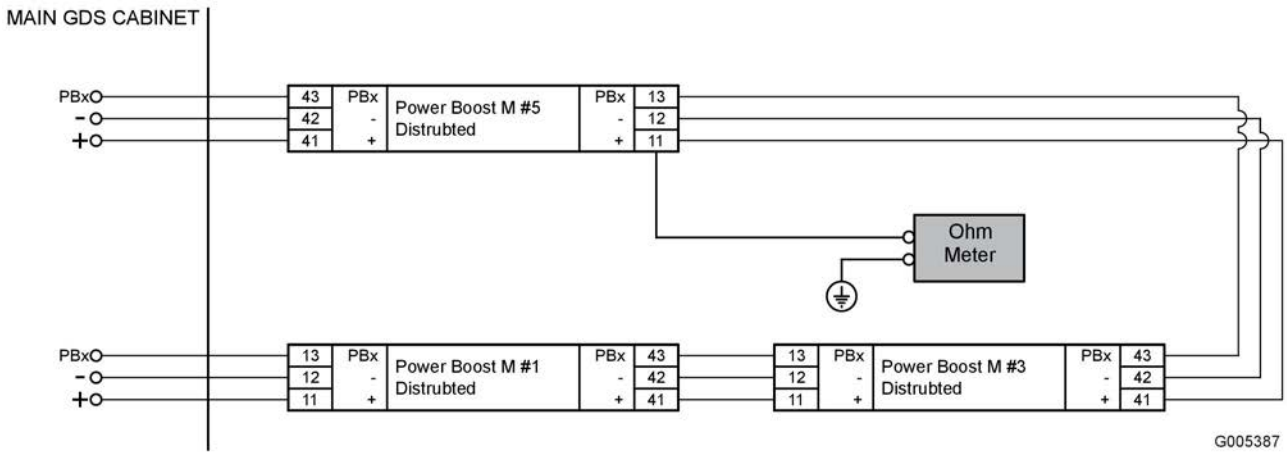

Figure 25. Test for earth failure

The measured value

The measured value should be more than 50 kOhm. Values below 8 kOhm (±2 kOhm) will be indicated as earth fault.

Locate the earth fault

Hint!
The control panel reports which parts of the system that is affected by the earth fault.

Proceed as follows when you want to locate an earth fault:

1	Divide the cable in two and locate the earth fault.
2	Divide each half in two and locate the earth fault.
3	Continue to divide the cable into halves until you have found the exact position of the earth fault.

3.3.7 Setting the address

NOTE!
Check that the addresses are set correctly.

All Salwico GS5000 addressable modules must be given an unique address in order to make it possible for the software to identify the modules. The address is set with an 8-pole DIP switch with the exception of module Control M Gas (there the address is set on the panel via - 5 5 -). For instructions on how to set the address on DIP switch, refer to the data sheet for each module.

Modules Control M Gas, Control M X, Relay M 8 and Analogue M 4-20 (with connected gas detectors) has to be configured in the Configuration program, please refer to the Configuration Manual.

3.3.8 Setting function or mode for modules

NOTE!
Check that the correct functions or modes are set for the connected modules.

On some modules (for example Power Boost M and BusCon M Gas) different functions are set by DIP-switches.

For Relay M 8 and Analogue M 4-20 the DIP switch 8 on these modules must be set to ON when they are used in a Gas detection system.

For instructions on how to set the DIP-switches, refer to the data sheet for each module.

3.3.9 Electrical installation, central equipment

3.3.9.1 Terminal layout

Since most systems are designed specifically for each customer, no standard for connecting the different modules within the system exists.

Refer to system connection drawings for more information.

For other electrical installations, such as printers, refer to the specific project drawings.

3.3.9.2 Control Panels

If a Control Panel is placed outside of the Gas detection cabinet, connection to the Central Unit is made via the external Backbone Bus channel (BBE) or the Power Boost loop. Each cable should be routed seperately for maximum security.

4 Configuration

4.1 Uploading a configuration file to the gas detection system

4.1.1 Uploading a configuration file from the USB memory stick

When you have finished and verified a configuration file it is time to upload it to the gas detection system. The configuration file must have the file extension “.ccp” and can consist of up-to 50 ASCII characters, i.e. only characters found on a standard western keyboard.

NOTE!
The old configuration file will be overwritten. Please save the old file before proceeding.

Note that configuration files generated by an old configuration program will not be compatible with the gas detection system. Use a program version of the CCP Configuration program compatible with the system version used in your gas detection system.

Hint!
Old configuration files can be opened in the new program, verified, and then saved in order get a compatible file format.

The configuration file can be uploaded using an approved USB memory stick (available from an authorized dealer).

CAUTION!
Do not remove the USB memory stick until the upload is finished.

1	Connect the USB memory stick to the USB port on the rear of the control panel.	
2	Choose - 5 " 5 6 .$	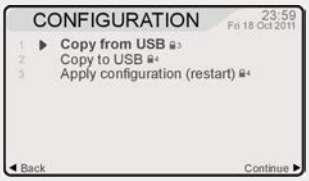
3	A list of the available “.ccp” files on the USB memory stick will be presented. Choose the appropriate “.ccp” configuration file from the list and press .	
4	Press to replace the systems configuration with the selected configuration from the USB memory. The new configuration file is uploaded to the gas detection system.	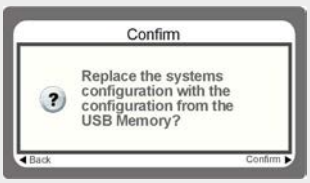

5	Press **Close**. Disconnect the USB memory stick.	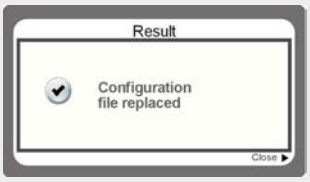
6	Update the system with the new configuration file by choosing - 5 " 5 5 7 . 8	
7	Press **Confirm** to start the update.	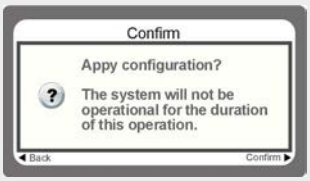
8	The system will apply the configuration. The configuration can only be done from the Control M Gas that is master in the system, i.e. the Control M Gas with address 1. A Control M Gas module with address 2-10 will update its local configuration before it restarts itself.	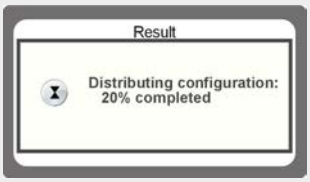
9	Press **Restart** when the distribution is completed.	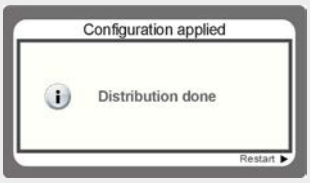
10	The Control M Gas restarts and loads the new configuration file.	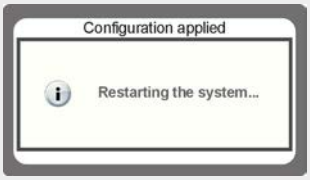

Note that a Control M X does not have a USB port and at the writing of this manual the recommended way to load a configuration to that module is by synchronizing the configuration from a USB equipped Control Module.

, 2 & (& ((&

, 2 & (& (! $ %

When you want to view or make changes in an existing configuration file you can download it from the gas alarm central.

"

When requesting assistance on technical issues please send the configuration file and the system log file to your local retailer.

The configuration file can be downloaded using an approved USB memory stick (available from an authorized dealer).

CAUTION!
Do not remove the USB memory stick until the download is finished.

1	Connect the USB memory stick to the USB port on the rear of the control panel.	
2	Choose - 5 " 5 6 .$	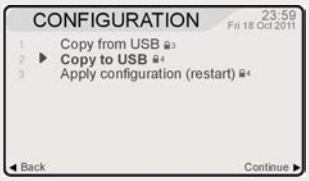
3	Press to copy the system's configuration to the USB memory stick.	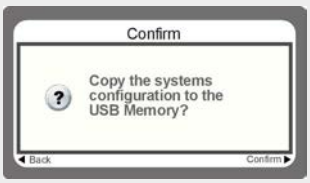
4	The system will now download the configuration file. Wait until this process is complete! Press .	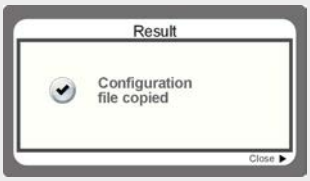
5	Disconnect the USB memory stick and copy the configuration file to a PC.	

5 Verification

5.1 Prerequisites for Verification

NOTE!
The configuration of the system must be performed by a person with good knowledge of the system. This operator must have the authority to work in access level 4.

The system is delivered with a complete system configuration or a test configuration.

5.2 Verification of Power Boost loops

NOTE!
Once the loop cable has been tested and is free from faults, the next step is to connect it to the central.

The verification procedure is described below:

1	Make sure that the system is connected to an external power supply.	Refer to chapter Installation in the Installation manual and individual project drawings for information on the electrical connections.
2	Connect both channels of one of the Power Boost loops.	
3	Power up the system. The Power LED lights and a text appears on the display to show that the system is up and running. Wait for a few minutes to let the system perform all system checks. If the system detects a fault during the start-up, a fault code is displayed in the control panel.	For more information about the fault codes, see Fault Code List, page 72.

4	Verify that the correct number and type of gas detectors are installed in the correct place. The system will provide you with the requested information if you use the *Menu » Observation list* or the *Menu » Gas detectors*. A list of all detectors found on the Power Boost loop will be generated (see figure to the right). Verify that the information for the following is correct: • Zone • Gas type • Location • Address	 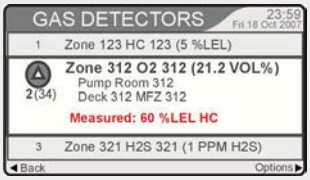 If a unit is missing, see Wrong number of system modules/gas detectors, page 29.
5	Make a gas detector test of the complete Gas detection system. Use appropriate test gas to test each detector.	! Disable all outputs before starting the test. *Menu » Service » Settings » Disable all outputs*
6	Use a top to bottom procedure if you have any problem with the verification of the Power Boost loop function. Start by solving the problems that affect the whole system and then continue with the problems with each address.	

7 ' & ( )

7 ') * (&

After installation of the Gas detection system, test the different parts of the system to assure that they function properly.

5.3.2 Test the control panel display

With the function Display & LED test it is possible to test:

- The display
- All indications on the control panel
- The buzzer

1	To test the control panel display, use: - 5 " 5 5 : * .

5.4 Trouble shooting

5.4.1 Wrong number of system modules/gas detectors

If a limited number of units do not answer, the problem may depend on one of the causes listed below.

' ; !

Cause	Remedy
Less system modules/gas detectors found than configured.	Install the missing system modules/gas detectors or change the configuration.
More system modules/gas detectors found than configured.	Compare the found system modules/gas detectors with the configuration program.
Wrong address for the system modules/gas detectors.	Set the correct address.
Two or more system modules with the same address.	Compare the found addresses with the corresponding modules and set the correct addresses.

5.4.2 Cable break

No gas detectors are answering

1	The gas detector is not responding?	The cable is broken between the gas detector and the Analogue M 4-20 module.

No Power Boost loop units (gas detectors) are answering

1	No answer is received?	The cable is broken before the first system module and after the last system module.

Only some system modules are answering

1	Look for the last system modules answering on each side of the loop. The cable break is situated after or between the answering modules.	Refer to Test 1: Test for cable break, page 17, for more information.

5.4.3 Earth fault

The control panel will display which area that has the earth fault. It can be the Power Boost loop or in cables between gas detectors and Analogue M 4-20 modules.

1	Examine the faulty cable to locate the earth fault.	Refer to Test 3: Test for earth failure, page 20 for more details.

5.4.4 Short circuit

No answer on Power Boost loop

1	Search for the short circuits between the central unit and the first Power Boost module.	Refer to Test 2: Test for short circuits, page 19 for more details.

If only some Power Boost loop units answer

1	The control panel displays which system modules are missing. Search for the short circuit between the fault reported modules to find the exact location of the fault.	Refer to Test 2: Test for short circuits, page 19 for more details.

5.4.5 Muting faults

1	Simultaneously mute all the faults by pressing the button on the Control panel. You can mute the faults locally on a Repeater panel.	
2	The fault indication light stops flashing and change mode to steady yellow.	The fault is put in a fault list under - 5 5 .

5.4.6 Reset faults

NOTE!
The fault alarm must be muted before it can be reset.

The faults are reset from the Fault list under - 5 5 .

From the Repeater panel it is only possible to mute faults and alarms, not reset them.

NOTE!
The cause of the problem must disappear before a fault can be reset.

The Fault is Reset

1	The fault is reset and it disappears from the fault list.

The Fault is not Reset

1	The fault is not reset and the reason for this is displayed.	
2	Check the problem and try to solve it.	See Fault Code List, page 72 for more information.
3	Attempt to reset the fault.	

5.4.7 Update firmware

This instruction describes how to update firmware in a Salwico GS5000 gas detection system.

NOTE!
Access Level 4 is required to upgrade firmware in the system. You may be required to login with correct credentials during the firmware upgrade process.

NOTE!
The system will only update the modules that have software that differs from what is in the service package stored locally in the control module.

1	Choose - 5 " 5 6 .	
2	Press to start the update. **NOTE!** The gas detection system will not be operational for the duration of the update.	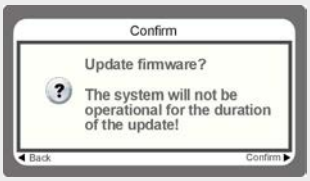
3	The system starts the update process. **CAUTION!** Wait until this process is complete!	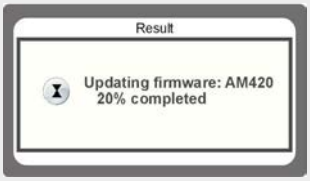
4	Press to restart the system.	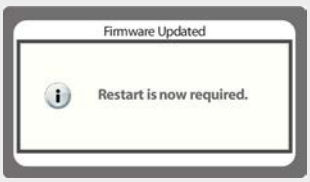

5.4.8 Copy the system log to a USB memory stick

If you want to control the information saved in the system log you can download it from the gas alarm central.

Hint!
When requesting assistance on technical issues please send the system log file and the systems configuration file to your local retailer.

The system log file can be downloaded using an approved USB memory stick (available from an authorized dealer).

CAUTION!
Do not remove the USB memory stick until the download is finished.

1	Connect the USB memory stick to the USB port on the rear of the control panel.	
2	Choose - 5 " 5 5 . 6 $	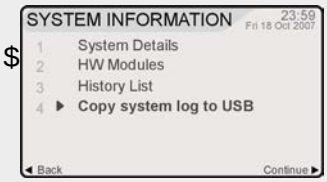
3	Press to copy the systems log to the USB memory stick.	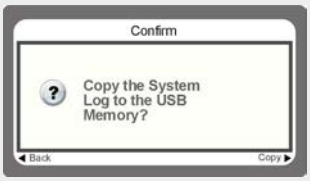
4	The system will now download the system log file. Wait until this process is complete! Press .	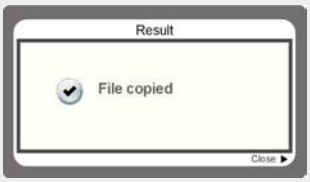
5	Disconnect the USB memory stick and copy the system log file to a PC.	File name example: YYYY-MM-DD_xxxxxx_syslog.txt

6 Commissioning Requirements

6.1 Prerequisite

The procedure described below in Loop requirements is to be followed by the installation team.

If nothing else is agreed, no commissioning engineer will be sent before the steps below are confirmed and the appropriate papers are signed and sent to your local Consilium office or authorized representative.

6.2 Loop requirements

The following specification is a checklist of requirements for the system loops. The specification shall be used by the installation organisation of Power Boost loop units/detectors and cabling. Start with Part A: Power Boost loop configuration, continue with Part B: Loop status and then Part C: Central status.

The list in Part A: Power Boost loop configuration includes all data you need when configuring the loops.

Part B: Loop status is more like a checklist - follow it point by point. When you have completed this part you should have filled in, signed and faxed a test report containing each Power Boost loop unit/detector in the system.

Part C: Central status is also a checklist, but it deals with the status of the central unit.

6.3 Part A: Power Boost loop configuration

Refer to Cable requirements, page 8 and Cable lengths, page 10 for requirements and limitations.

6.4 Part B: Loop status

1	All units shall be located at the proper place according to the project drawings.
2	Each system module shall be given a unique address, refer to Setting the address, page 21.
3	Connect cables to Power Boost loop units/detectors according to the project drawing for that unit. Follow the requirements in chapter Electrical Installation, page 8 **CAUTION!** Do not remove any protective covers from the gas detectors before the function test.

4	A test report must be filled in for each Power Boost loop unit/detector. The test report must contain at least the following information for each unit/detector: • Type of unit/detector • Location • Address • Installation date
5	Send one copy of the signed test protocol to your local Consilium office or authorized representative.
6	When all protocols are signed, your local Consilium office or authorized representative will make the final control and adjustment of the system.

6.5 Part C: Central status

CAUTION!
The presence of an authorised engineer is required before power is connected to the central unit to minimise the start-up costs for the yard and/or owner during commissioning.

- All control and indication functions must be connected to relay outputs. Connect all outputs and inputs according to the project drawings.
- Connect finalized Power Boost loops to the central according to the project drawings.

NOTE!
Deviations from the above criteria may cause time delays. These time delays will be invoiced.

6.6 Summary

For each gas detector, a test report as described in Part B: Loop status, page 33 must be filled in and sent to your local Consilium office or authorized representative before commissioning of the system starts.

7 Gas Detection Installation Guidelines

CAUTION!
Always refer to and act according to current local rules and regulations.

7.1 Gas Detectors Installation

7.1.1 General comments when installing gas detectors

This chapter provides important information for installing gas detection equipment.

- We strongly recommend protecting the gas detector sensor cell when doing painting work to avoid the high amount of silicones that exists in paint. In order to protect the sensor cell Consilium has installed a protection cover that is mounted on the detector cell from delivery. Keep the covers mounted as long as possible, recommendable is to keep them on until first sea-trial. It's also a benefit to keep the gas detectors without power. When the gas detector is currentless it's less affected by paint.
- To help maintain the correct IP class, plug any unused cable glands.
- Keep the detectors protection caps on as long as possible. The protection caps should be removed after commissioning is completed and the system is handed over.

NOTE!
For detailed connection and installation information, refer to the data sheet for each unit.

7.1.2 Location of sensors

Considerable guidance is available from standards such as EN50073 Guide for selection, installation, use and maintenance of apparatus for the detection and measurement of combustible gases or Oxygen. Similar international codes of practice may be used where applicable. In addition certain regulatory bodies publish specifications giving minimum gas detection requirements for specific applications. These references are useful, but tend to be either very generic and therefore too general in detail, or application specific and therefore irrelevant in most applications.

The placement of detectors should be determined following the advice of experts having specialist knowledge of gas dispersion and equipment involved. The agreement reached on the location of detectors should also be recorded.

There are a number of simple and quite often obvious considerations that help to determine detector location:

- To detect gases that are lighter than air (e.g. Methane and Ammonia), detectors should be mounted at high level and preferably use a collecting cone.
- To detect heavier than air gases (e.g. Butane, Sulphur Dioxide and Propane), detectors should be mounted at a low level.

- Consider how escaping gas may behave due to natural or forced air currents. Mount detectors in ventilation ducts if appropriate.
- Detectors should be positioned a little way back form high pressure parts to allow gas clouds to form. Otherwise any leak of gas is likely to pass by in a high speed jet and not be detected.
- Consider ease of access for functional testing and servicing.
- Detectors should be installed at the designated location with the detector pointing downwards. This ensures that dust or water will not collect on the front of the sensor and stop the gas entering the detector.

7.1.3 IR detectors

There are two main types of IR Detectors, open-path or single point. Open-path detectors are mainly used in outdoor situations and Single point detectors in indoor situations.

Many combustible gases have absorption bands in the infrared region of the electromagnetic spectrum of light and the principle of infrared absorption is used to detect the gas concentration.

IR Detectors has a very fast response (typically less than 10 seconds). They can also be designed to be unaffected by any known ‘poisons’, they are failsafe and they will operate successfully in inert atmospheres, and under a wide range of ambient temperature, pressure and humidity conditions. The technique operates on the principle of dual wavelength IR absorption, whereby light passes through the sample mixture at two wavelengths, one of which is set at the absorption peak of the gas to be detected, whilst the other is not. A detector compares the signal strengths of sample and reference beams and, by subtraction, can give a measure of the gas concentration.

7.1.4 Catalytic detectors

Catalytic sensors consists of a very small sensing element sometimes called a "bead". It is made of an electrically heated platinum wire coil, covered first with a ceramic base such as Alumina and then with a final outer coating of Palladium or Rhodium catalyst dispersed in a substrate of Thoria. This type of sensor operates on the principle that when a combustible gas/air mixture passes over the hot catalyst surface, combustion occurs and the heat evolved increases the temperature of the "bead". This in turn alters the resistance of the platinum coil and can be measured by using the coil as a temperature thermometer in a standard electrical bridge circuit. The resistance change is then directly related to the gas concentration in the surrounding atmosphere and can be displayed on an indicating device.

The response time for catalytic sensors are typically between 20 and 30 seconds.

These detectors have the following properties:

- Presence of oxygen is not required during equipment life time.
- Immunity to poisoning from H2S, silicone and other agents.
- No saturation effects from high gas concentrations.

- The gas flow rate has no influence on accuracy.
- Proven high reliability and long term stability results in low test frequency and lower calibration cost.
- Can be used in duct installations.

7.1.5 Electrochemical detectors

There are many different designs of electrochemical detectors but the common features are described below:

Three active gas diffusion electrodes are immersed in a common electrolyte for efficient conduction of ions between the working and counter electrodes. Depending on the specific cell the target gas is either oxidised or reduced at the surface of the working electrode. This reaction alters the potential of the working electrode relative to the reference electrode. The primary function of the associated electronic driver circuit connected to the cell is to minimise this potential difference by passing current between the working and counter electrodes, the measured current being proportional to the target gas concentration. Gas enters the cell through an external diffusion barrier that is porous to gas but impermeable to liquid.

Gas specific electrochemical sensors can be used to detect the majority of common toxic gases, including CO, H_2S, Cl_2, O_2, SO_2 etc. Electrochemical sensors are compact, require very little power, have excellent linearity and repeatability and generally have a long life span, typically one to three years. Response times are typically 30-60 seconds.

These detectors have the following properties:

- Sensitive to poisoning from H2S, silicone and other agents.
- Can detect a wide almost all hydro carbon based gases.

7.1.6 Electrical siren

- Make sure to programme the siren to the correct sound and intermittence using the DIP switch inside the siren. More information about how to set the DIP switch is found in the siren’s data sheet.
- Turn the volume control to max.
- Clearly label the siren with the alarm’s category (e.g., GAS ALARM).

7.2 Cabling and Electrical Installation

7.2.1 Cable types

All cables must be approved. Refer to Cable requirements, page 8.

7.2.2 Cable protective tubes of metal

When installing cable protective tubes – take into account that the cable easily can be pulled through the tube and afterwards easily be changed or removed.

When installing metal cable tubes – following must be taken into account:

- If there is more than one cable in the same tube, the cross section (counted of mutual external diameters) may be max 40% of the inner cross section of the tube.
- If the tube is more than 10 m long, drafting holes has to be done.
- Tubes must be installed on support so that the background may be painted.
- Tube installation must be done by welding or by tube joints. Fastening distances are located 100 mm from the tube end and afterwards every 1.5 m.
- Bending radius must be at least 6 times the external diameter of the tube.
- The upper tube end in open decks must be sealed up, this to prevent water from coming in.

7.2.3 Cable protective tubes of plastic

Plastic tubes will be used inside the wall linings and also in the ceiling, where attachment directly to the supporting construction is not possible.

When installing plastic cable tubes – following must be taken into account:

- Bending radius must be at least six times external diameter of the tube.
- Installation must be done onto the warm side of a thermal insulation and at least 100 mm from a hot surface, preferably below it. Piping is not allowed inside a thermal insulation.
- The tubes are tied with galvanized wire clips. The first clip is located approximately 100 mm from the tube end and afterwards every 1 m.

7.2.4 Cabling

When installing the cables – take into account the minimum internal bending radius, that has nominal value of six times the external diameter of the cable.

- If two separate routes for the cables are required – all supplies and involved control cables must be passed by separate routes according to the drawings and cable passing list.
- Do not bundle low voltage cables together with power cables, they have to be separated from each other.
- When cable bundles are mounted on trays this can be done as follows:
  - On the trays along the ship – the power cables on the left side (Port-side) and the low voltage cables on the right side (Starboard-side) of the tray.
  - On the trays across the ship – the power cables to the fore side and the low voltage cables in the stern side of the tray.
  - On the fore or stem bulkhead trays in vertical shaft – the power cables to the Port-side or the Starboard-side bulkhead trays, the power cables to the fore side and the low voltage cables to the stern side of the tray.

- In cable junctions and when exiting the cable trays bridges with fastening bolts have to be used – low voltage cables for alarm, communication, navigational and measuring equipment have to be installed in their own bundles.
- Each gas detector installed in engine room areas shall have two (2) meters extra cables, this to make it possible to relocate the detector position when performing “real” gas tests with fans etc. running.

7.2.5 Cable inlets to equipment

When installing – the following must be taken into account.

- Wet spaces:
  - Cables are penetrated from the bellow or from the side with diaphragm seals.
  - Let the cables enter the sealing at a right angle (or as near a right angle as possible).
- Dry spaces:
  - Free entering

No cables are to be installed below 50 mm distance from bottom or fuel oil tank, except cables ending in these spaces.

7.2.6 Fixing of cables

When fixing the cables – the following must be taken into account.

- When cable bundles are mounted on trays the fixing is as follow:
  - Cables above a tray:
    - a few small cables with a normal bundle tie
    - bigger bundles with wide bundle ties
  - Cables under a tray, vertical trays and tray installed in their angle side:
    - plastic bundle ties can be used, however every fourth tie shall be of metal
- Outdoor cables shall be mounted with stainless steel band or bundle-ties of steel.
- Cable fixing is to be done at every ladder rung, max 400 mm.
- Cable fixing in device penetrations/switchboards/desks etc. are to be fixed so that possible mechanical strain do not pass over to penetrations or connection points.
- Cable fixing shall be fixed so that possible mechanical strain do not pass over to penetrations or connection points.
- When installing cables without plastic tube inside the lining, the cables are fastened to supporting construction of the ceiling with plastic bundle-ties.

7.2.7 Markings

- Cables entering terminal boxes and equals shall be marked with identification markings.

- The cable identification is to be done with a metal dymo-tape – on open decks the dymo-tape must be of stainless steel.
- Cable markings are the same as the identification marks in the drawings.

7.2.8 Cable ends

When terminating the cables – the following must be taken into account:

- The cable is passed in switchboards, decks and terminals unpeeled as near the connection place as possible.
- Mark extra wires (not used) and do not cut them.
- Earthing wire is marked with yellow/green sleeve.
- Cable wire ends of 0.5–2.5 mm^2 shall be equipped with compression-type collar, if the contact screw presses direct wires.
- A cable eye shall be installed at the end of a conductor, connected by means of a screw or a bolt.
- No more than two conductors shall be connected onto one side of the same terminal.

7.2.9 Protective earthings

- All metal casings of electrical equipment over 24 V are to be earthed to the ships hull. When the earthing is done with cable conductors – yellow/green conductors are to be used or last conductor wire of the cable covered along the whole length with yellow/green hose. Yellow/green is used only for earthings.
- A separate earthing conductor is connected to the earthing point on the external enclosure of the equipment and on the ships hull by means of a screw connection.
- Devices shall not be earthed by means of a separate earthing conductor through another installation (serial earthing).
- The door of a metal casing containing electrical equipment (voltage over 24 V) must be earthed to the casings body with one earthing conductor. The earthing fastening screw shall have a diameter of at least 6 mm with the exception of the screws mounted by the manufacturer. The earthing screw shall not be used for any other purpose than earthing.
- Electrical equipment is to be earthed by S-conductor (yellow/green) of supply cable with a cross section area of 1.5–16 mm^2.

Other equipment earthings - see table below.

' # " ! ! <

Cross section of supply cable (mm^2)	1.5	2.5	4	6	10	16	25	35	50
S-conductur (mm^2) (yellow/green)	6	6	6	6	6	10	16	25	35

8 Calibration Instruction for Salwico GD True IR

8.1 Preliminaries

This instructions applies to the following products: 5200138-00A, 5200138-01A, 5200204-00A, 5200204-01A and 5200204-02A.

G003511

) = '06* >0

It is recommended to carry out a gas response check each 6 moths on the gas detector to ensure the correct operation. If the gas reading has drifted outside the specified range a calibration of the instrument is necessary.

CAUTION!
Before initial calibration allow the detector to stabilize for 30 minutes after applying power. When in and calibration mode the current output from the detector is inhibited (default 2mA) to avoid false alarms. For Flammable gas calibration use a calibration gas concentration of between 25%LEL and 75%LEL to ensure that the required accuracy can be attained.

Considerations:

- To calibrate the detector, use an appropriate span gas cylinder, constant flow regulator.
- A compressed air cylinder (20.9%Vol oxygen) should be used to perform the calibration, if the area where the detector is located contains any residual amount of the target gas. If no residual gas is present then the background air can be used to perform the calibration.

To calibrate the detector follow the procedures below.

8.2 Calibrating the sensor (Zero calibration)

1	Use the arrow keys on the control panel to manoeuvre through the different menus. Press the right arrow key to access the menu tree.	
2	Scroll to % and press .	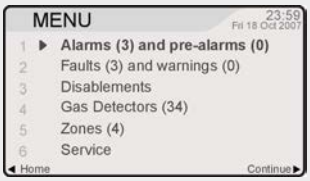
3	Scroll to the detector that should be calibrated and press .	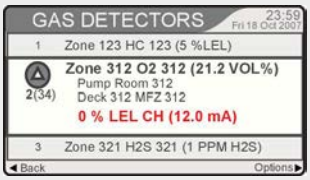
4	Scroll to ?and choose . **NOTE!** There will be a padlock on this menu if you are not in access level 3 or above. You will be prompted to enter the access code for level 3 before you can continue.	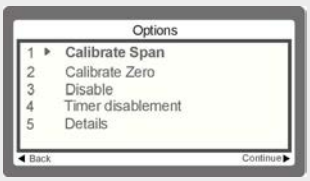
5	You have to confirm your selection before you can proceed. **NOTE!** The detector will be disabled during the whole calibration process and 15 minutes after to prevent unwanted alarms. Press to proceed.	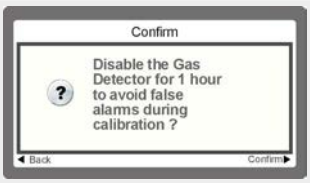
6	Now you will be in the zero calibration menu and able to see the real time value of the detector. Use the and keys to zero calibrate the gas detector. Press to proceed.	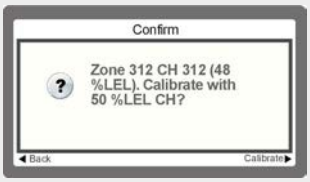
7	If the ambient air is NOT considered reliable to use to set the zero, apply a clean source of zero gas or compressed air to the gas detector. Wait for a minimum of two minutes to ensure that the gas reading is stabile.	

8	After the gas detector reading has stabilized press **Calibrate**.	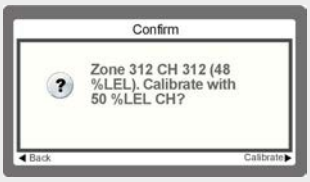
9	You will get a confirmation message that the detector has been successfully calibrated. Press **Close** to get back to menu .	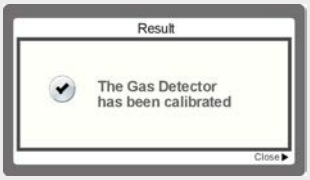
10	! If a zero gas or compressed air has been used during calibration make sure to close all valves and disconnect it from the detector.	

= ' & . # /

1	Use the arrow keys on the control panel to manoeuvre through the different menus. Press the right arrow key to access the menu tree.	
2	Scroll to % and press **Continue**.	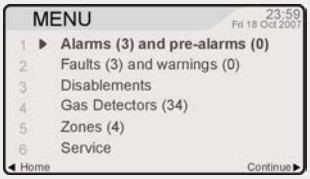
3	Scroll to the detector that should be calibrated and press **Options**.	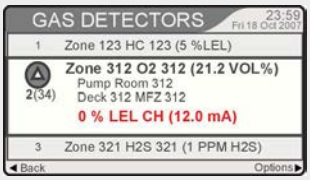
4	Scroll to and choose **Continue**. There will be a padlock on this menu if you are not in access level 3 or above. You will be prompted to enter the access code for level 3 before you can continue.	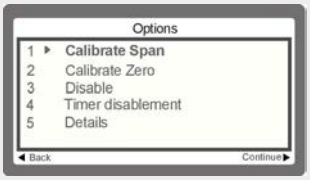
5	You have to confirm your selection before you can proceed. The detector will be disabled during the whole calibration process and 15 minutes after to prevent unwanted alarms. Press **Continue** to proceed.	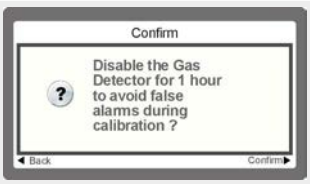

6	Use the and keys to enter calibration gas concentration that will be used during the span calibration; the default value will be half of the detector range. Press **Continue** to proceed.	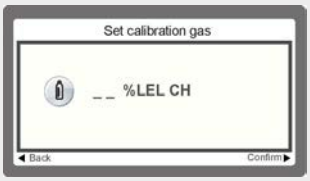
7	In the Span calibration menu you will be able to see the real time value of the detector.	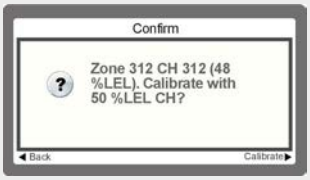
8	Apply calibration gas to the detector. Wait for a minimum of two minutes to ensure that the gas reading is stabile.	
9	After the gas detector reading has stabilized press **Calibrate**.	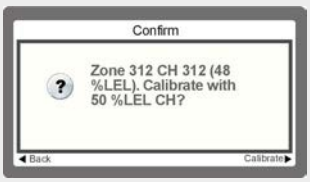
10	You will get a confirmation message that the detector has been successfully calibrated. Press **Close** to get back to menu .	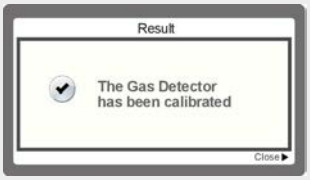
11	Close all valves on the calibration test gas and disconnect it from the detector.	The detector has now been calibrated from the control panel.

= , &

All disablements in the Salwico GS5000 gas detection system are presented in the disablements list. Any enablement is made from this list.

1	Scroll to - 5 .
2	Choose the detector you just disabled and press **Options**.
3	Select 0 and press **Continue**.

9 Calibration Instruction for Salwico GD

9.1 Preliminaries

This instructions applies to the following products: 5200260-01A, 5200260-02A, 5200260-03A, 5200260-04A, 5200261-01A, 5200262-01A, 5200262-02A and 5200262-03A.

+

It is recommended to carry out a gas response check each 6 moths on the gas detector to ensure the correct operation. If the gas reading has drifted outside the specified range a calibration of the instrument is necessary.

CAUTION!
Before initial calibration allow the detector to stabilize for 30 minutes after applying power. When in and calibration mode the current output from the detector is inhibited (default 2mA) to avoid false alarms. For Flammable gas calibration use a calibration gas concentration of between 25%LEL and 75%LEL to ensure that the required accuracy can be attained.

Considerations:

- To calibrate the detector, use an appropriate span gas cylinder, constant flow regulator.
- A compressed air cylinder (20.9%Vol oxygen) should be used to perform the calibration, if the area where the detector is located contains any residual amount of the target gas. If no residual gas is present then the background air can be used to perform the calibration.

To calibrate the detector follow the procedures below.

NOTE!
The Oxygen sensor does not require a zeroing procedure. Background air (20.9%Vol oxygen) can be used to span the oxygen sensor in place of a compressed air cylinder (20.9%Vol oxygen).

9.2 Calibrating the sensor (Zero calibration)

1	Use the arrow keys on the control panel to manoeuvre through the different menus. Press the right arrow key to access the menu tree.	
2	Scroll to % and press .	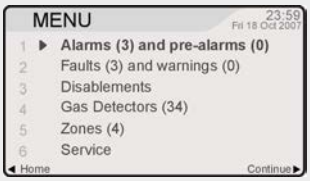
3	Scroll to the detector that should be calibrated and press .	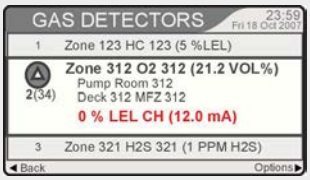
4	Scroll to and choose .	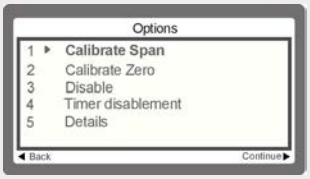
5	You have to confirm the disablement before you can proceed. Press to continue.	
6	You will get a confirmation message that the detector has been disabled. Press to continue.	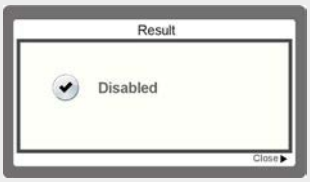
7	If the ambient air is NOT considered reliable to use to set the ZERO, apply a clean source of zero gas or compressed air.	
8	**NOTE!** For the following steps in the zero calibration instruction proceed to the Salwico GD detector.	
9	To access the calibration menu, hold the end of the magnet over the switch located at the top center of the detector display for at least 3 seconds and then remove.	

10	The display will indicate the first configuration mode menu ‘SEt CAL’.	SEt CAL
11	Put the magnet over the switch again and remove it to enter the Calibration menu.	
12	The display will show the current gas reading, and the icon flashes.	500FS CO 0 ppm
13	When the zero gas reading is stable use to confirm zero calibration.	
14	ZEro PASS If successful the display shows ‘ZEro PASS’. (If not successful, the display shows ‘Zero FAIL’ and returns to configuration mode).	ZEro FAIL (If not successful, the display shows ‘Zero FAIL’ and returns to configuration mode.)
15	The display shows ‘SPAn’ with ‘YES’ flashing.	SPAn YES
16	If span calibration is required? • Use to proceed to the span calibration menu. Follow the separate instructions in section Calibrating the sensor (Span calibration), page 48. If span calibration is **not** required? • Perform the following steps to quit.	
17	Use or to select ‘No’. Use to return to configuration mode.	SPAn No
18	The instrument returns to the ‘Set CAL’ menu.	SEt CAL

19	Use ▲ or ▼ to select 'QuIT' to return to normal monitoring mode.	

9.3 Calibrating the sensor (Span calibration)

1	The display shows the current calibration span gas concentration while flashing the icon. Use ▲ or ▼ to change the calibration span gas concentration, and ✓ when required span calibration level is set.	
2	The display will show the current gas reading, and the icon flashes.	
3	Connect the regulator to the span gas cylinder.	
4	Apply the span gas to the sensor using the Salwico GD weather house. The live gas reading is displayed. • When the reading is stable, use ✓ to confirm the span calibration.	
5	 If the sensor has been replaced a display with 'YES' or 'No' may be shown.	
6	If the sensor has been replaced? • Use ▲ or ▼ to select 'YES. If the sensor has been replaced? • Use ▲ or ▼ to select 'No.	

7	 If the span calibration is successful the instrument will briefly display ‘SPAn PASS’.	 (If the span calibration fails the instrument will briefly display ‘SPAN FAIL’ and return to configuration mode.)
8	The display alternates between “Purg gAS” and the gas reading to indicate that the unit is expecting the span gas to be removed from the sensor.	
9	Promptly switch off the calibration span gas. Remove the hose from the sensor weather house. Allow the gas to disperse.	
10	When the reading falls below 50% of the calibration gas level the display indicates a countdown (up to 180 seconds dependant on gas type).	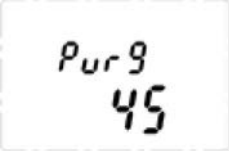
11	When the countdown is finished, the calibration procedure is complete.	
12	The instrument returns to the ‘Set CAL’ menu.	
13	Activate the ▲ or ▼ switch to select another menu or select ‘QuIT’ to return to normal monitoring mode.	
14	Calibration of the sensor has now been performed.	

9.4 Reconnecting disabled detectors

All disablements in the Salwico GS5000 gas detection system are presented in the disablements list. Any enablement is made from this list.

1	Scroll to - 5 .
2	Choose the detector you just disabled and press .
3	Select 0 and press .

10 Calibration Instruction for Salwico ST200 and Salwico ST600EX

10.1 Preliminaries

This instructions applies to the following products:

G005243

, ' ((# % % + (

G005244

/ ') ((* @ # % %) (

NOTE!
It is recommended to periodically carry out a gas response check on the gas detector to ensure correct operation.

The ST200 and ST600EX detectors for 0-100% LEL Hydrocarbon can be calibrated and the out-signal adjusted.

Hint!
Reading at 0% is 4.0 mA, and full range 100% LEL is 20 mA.

Tools

Tools required for this operation are:

- A small terminal screw driver, with thin straight tip.
- A multimeter with mA (milliampere) capacity.

10.2 Prerequisites

1	Use the arrow keys on the control panel to manoeuvre through the different menus. Press the right arrow key to access the menu tree.	
2	Scroll to % and press .	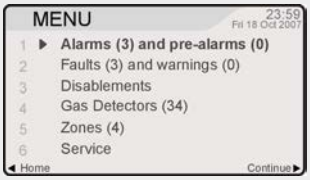
3	Scroll to the detector that should be calibrated and press .	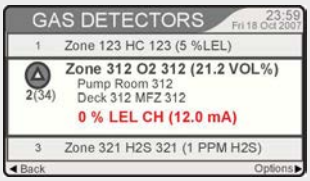
4	Scroll to and choose .	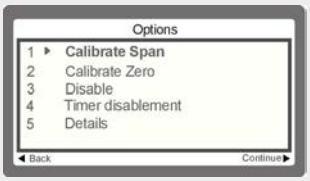
5	You have to confirm the disablement before you can proceed. Press to continue.	
6	You will get a confirmation message that the detector has been disabled. Press to continue.	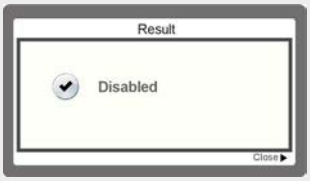
7	If the ambient air is NOT considered reliable to use to set the ZERO, apply a clean source of zero gas or compressed air.	
8	**NOTE!** For the following steps in the zero calibration instruction proceed to the Salwico ST200 or ST600EX detector.	

9	Connect the Flowcap to the sensor head as shown in the picture. Connect the measuring tips of the multimeter to the test points in the detector. Plus is red, minus is black. **Hint!** Picture shows a ST200. The ST600EX has identical connections and calibration, only fitted in an EX proof housing.	

10.3 Calibrating the sensor (Zero calibration)

Before gas Calibration is made, a should be made.

1	Connect the multimeter to the two test points as shown in the picture.	
2	The multimeter readout should be 4.0 mA with normal air / zero gas exposed to the sensor. Adjust to this reading with the 'Zero' potentiometer, marked in red. (See where the screwdriver is placed in the picture.)	

10.4 Calibrating the sensor (Span calibration with test gas)

NOTE!
For the ST600EX the procedure is identical as below, but note that the EX-Seal is void if the unit is open, so necessary precautions in the working area may be required.
Check on site what is applicable before the unit is opened up.

1	Connect the suitable test-gas for the detector, normally a 50% LEL mixture.	**Recommendations:** The ST200 and ST600EX can only respond to gas in normal Air. This means that Calibration gas in N2 / Nitrogen are not suited for these detectors. On LNG vessels a 50% LEL gas of CH4 Methane in air is to be used. For LPGs and Tankers we normally recommend a 50% LEL C3H8 Propane gas in air.
2	Adjust the reading to 12.0 mA using the 'SPAN' pot. See picture.	 (' ((')((*@
3	If the readout of 12.0 mA cannot be reached even with the "SPAN" pot in the bottom position, the sensor cell must be replaced to a new one. Consilium Replacement article number for ST200 and ST600EX detectors is 004460-S. When a new sensor is fitted, a new Zero adjustment as well as span calibration should be made.	Catalytic detectors have a limited lifespan of up to 5 years, but can be 'poisoned' by silicones, salt air, very humid air, etc. and their output will be reduced.

5 7 &

All disablements in the Salwico GS5000 gas detection system are presented in the disablements list. Any enablement is made from this list.

1	Scroll to *Menu » Disablements*.
2	Choose the detector you just disabled and press .
3	Select *Reconnect* and press .

11 Calibration Instruction for Salwico ST600EX-IR and Salwico ST700IR

11.1 Preliminaries

This instructions applies to the following products:

') ((* @ . > 0 # % % , % % , %

' + ((> 0 # % % ,

Consilium Replacement Sensor 004483 is suitable for ST600EX-IR and ST700IR.

11.2 Prerequisites

1	Use the arrow keys on the control panel to manoeuvre through the different menus. Press the right arrow key to access the menu tree.	

2	Scroll to *4 Gas Detectors* and press .	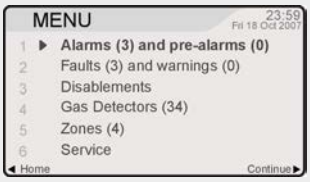
3	Scroll to the detector that should be calibrated and press .	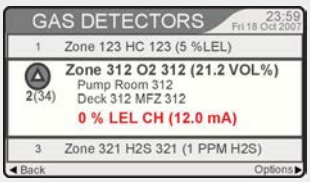
4	Scroll to *3 Disable* and choose .	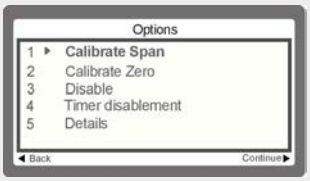
5	You have to confirm the disablement before you can proceed. Press to continue.	
6	You will get a confirmation message that the detector has been disabled. Press to continue.	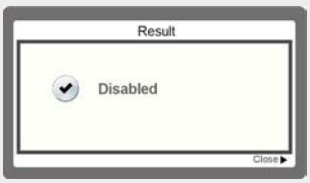
7	If the ambient air is NOT considered reliable to use to set the ZERO, apply a clean source of zero gas or compressed air.	
8	For the following steps in the zero calibration instruction proceed to the Salwico ST600EX-IR or ST700IR detector.	
9	Remove the cover from the detector. The calibration push buttons is situated at the PCB below the display. " In this type of detector no multimeter is required, the mA signal is adjusted by pressing the keys.	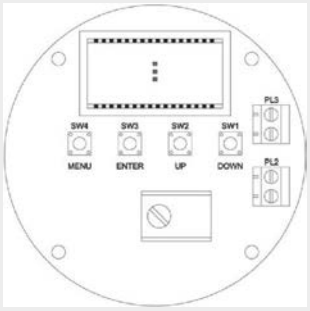

' & . A /

1	Push on the detector calibration push buttons to access the user menus. The display shows PASS.	

2	Push once (**SW3**) and twice (**SW2**) to insert the USER password and access the user menus.	
3	Push again on PASS (**SW4**). The display shows E1, the first calibration menu.	To change menu number, press **SW1** or **SW2**. E2 will be used later for Span calibration.
4	Apply Zero gas (or simply clean air).	If clean air is used, make sure there is no LEL content in the area before work starts) to the sensor.
5	Press **SW3** (ENTER) to activate the ZERO menu.	
6	Press **SW3** (ENTER) to perform the ZERO calibration.	Reading should now stabilize to zero. One can press **SW3** several times and wait a little to make sure the reading is stable, for half a minute or so.
7	Press **SW4** (MENU).	The display will return to its standard mode operation after displaying some numbers for the calibration factor.

, & . # /

1	Push **SW4** on the detector calibration push buttons to access the user menus. The display shows PASS.	
2	Push once (**SW3**) and twice (**SW2**) to insert the USER password and access the user menus.	
3	Push again on PASS (**SW4**). The display shows E1, the first calibration menu.	To change menu number, press **SW1** or **SW2**.
4	Select the menu E2 for span calibration by pressing **SW1** (DOWN).	
5	Press **SW3** (ENTER) to activate the menu.	
6	Use the **SW2** (UP) and **SW1** (DOWN) buttons to adjust the display reading according to the calibration gas concentration.	50% LEL is the standard gas in our gas bottles, if any other bottle is used the corresponding LEL concentration must be chosen in the display.

7	Now apply the calibration gas to the sensor by opening the regulator valve.	*Figure 34. A ST600EX-IR detector with a gas bottle connected to the flowcap.*
8	Wait until the display value is stable. (The value will probably not correspond to the concentration.)	On recently fitted sensors the reading may very well be zero or much higher than 50% LEL before the next step is done.
9	Press (ENTER) to confirm the SPAN calibration. Now the reading should go to 50% LEL.	This can be done several times and it will take up to a minute or more for the reading to stabilize.
10	Remove the calibration gas and wait until the gas has disappeared and the reading is back.	
11	Press ! (MENU) – The display will, after displaying some figures corresponding to sensor factor curves, return to its standard mode operation again and the correct mA signal will be sent out.	You can also press ! while gas is still flowing and reading is high, but the detector will then immediately after restart send out the high mA signal and the central go into alarm condition. This may or may not be a problem, depending on preparations before the calibration commenced.

7 &

All disablements in the Salwico GS5000 gas detection system are presented in the disablements list. Any enablement is made from this list.

1	Scroll to *Menu » Disablements*.
2	Choose the detector you just disabled and press .
3	Select *Reconnect* and press .

12 Calibration Instruction for Salwico ST400 H2S

12.1 Preliminaries

This instructions applies to the following products:

& '%((= 1 (. (%. (# %%)

The H_2S sensor is Electrochemical and measures H_2S content by means of chemical reaction.

DANGER!
H_2S – Hydrogen Sulphide – is toxic and dangerous also in rather low concentrations.

H_2S is a sticky gas and smells very distinctly from rotten eggs.

Consilium Replacement article number for ST400 H_2S detectors is no. " " # .

A new sensor is supplied without the metal housing and must be fitted in the housing. This applies to both H_2S and O_2 sensors of ST400 type.

Calibration equipment

Normal measuring range is 0-30 ppm, our standard calibration bottle no. $ " ! " " $ " % contains 20 ppm of gas in air.

For SW2020 a mix-bottle is often used, with H_2S 20 ppm as well as N_2 99% and C_3H_8 50% LEL, article no. $ " ! " ! " " ! %.

Test points (%) for the multi-meter as well as “SPAN” (&) and “ZERO” ( ) potentiometers are indicated below.

CAUTION!
Do not adjust the other potentiometers.

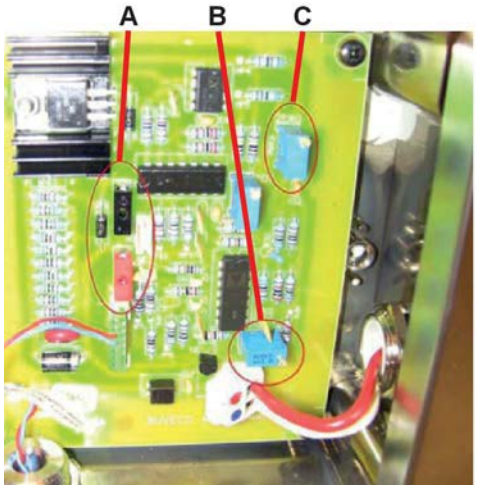

G006427

A Test points
B SPAN potentiometer
C ZERO potentiometer

12.2 Prerequisites

1	Use the arrow keys on the control panel to manoeuvre through the different menus. Press the right arrow key to access the menu tree.	
2	Scroll to % and press .	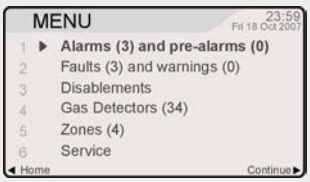
3	Scroll to the detector that should be calibrated and press .	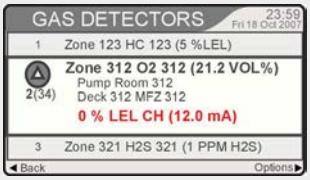
4	Scroll to and choose .	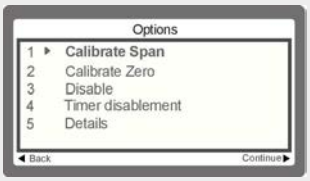
5	You have to confirm the disablement before you can proceed. Press to continue.	

6	You will get a confirmation message that the detector has been disabled. Press **Close** to continue.	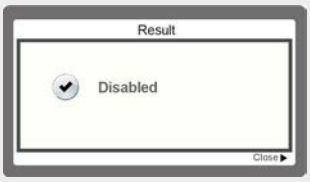
7	For the following steps in the zero calibration instruction proceed to the Salwico ST400 detector.	

' & . A /

1	Connect the Multi-meter (set to mA) as shown in the picture.	
2	Adjust with the “ZERO” potentiometer to 4,0 mA signal output.	

, & . # /

6 ((# 54 7 ## 54'5 ##

The ST400 for H_2S is available in two types.

Type 1: 0-25 PPM. mA-signal at 20 ppm = 16.8 mA.

Type 2: 0-30 PPM. mA-signal at 20 ppm = 14.6 mA.

To verify which type is in use, make a span calibration as below and verify the display reading in the central cabinet.

- If the readout at 14.6 mA is less than 20 PPM a calibration with 16.8 mA set-point must be done.

Span calibration

1	Connect the gas bottle with flowcap to the sensor head.	**CAUTION!** Due to the sticky nature of the H2S as short hoses as possible are to be used.
2	Open the regulator valve.	
3	When the reading is stabilized, adjust the readout to 14.6 mA (or 16.8 mA) with the “SPAN” potentiometer. **NOTE!** Response can be estimated to several minutes in some cases.	If this reading cannot be reached, the sensor head should be replaced.

12.5 Reconnecting disabled detectors

All disablements in the Salwico GS5000 gas detection system are presented in the disablements list. Any enablement is made from this list.

1	Scroll to - 5 .
2	Choose the detector you just disabled and press .
3	Select 0 and press .

13 Calibration Instruction for Salwico ST400 O2

13.1 Preliminaries

This instructions applies to the following products:

) ' % ((9 (. & A # % %)

The O_2 sensor is Electrochemical and measures O_2 content by means of chemical reaction.

NOTE!
The lifespan of the sensor is about one year, and it has a short shelf life – stocking it on board is not advised and this will reduce the operational lifetime.

Consilium Replacement article for sensor only of ST400 O_2 detector is no. " " '.

A new sensor is supplied without the metal housing and must be fitted in the housing. This applies to both H_2S and O_2 sensors of ST400 type.

Calibration equipment

The O_2 is calibrated with fresh breathing air, and is normally 20.8%.

Test points (%) for the multi-meter as well as “SPAN” (&) and “ZERO” ( ) potentiometers are indicated below.

CAUTION!
Do not adjust the other potentiometers.

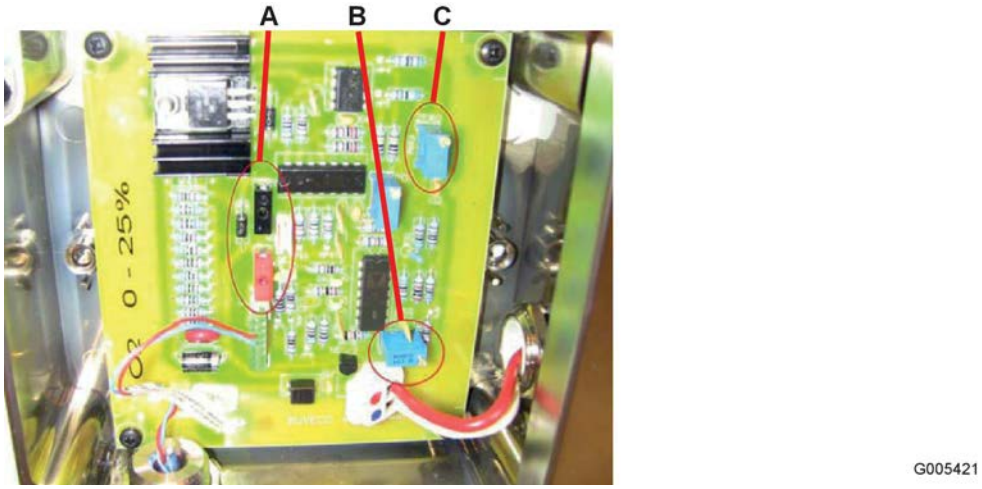

A Test points
B SPAN potentiometer
C ZERO potentiometer

13.2 Prerequisites

1	Use the arrow keys on the control panel to manoeuvre through the different menus. Press the right arrow key to access the menu tree.	
2	Scroll to % and press .	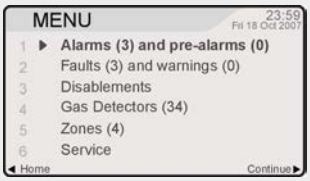
3	Scroll to the detector that should be calibrated and press .	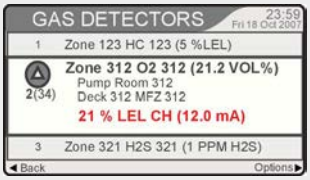
4	Scroll to and choose .	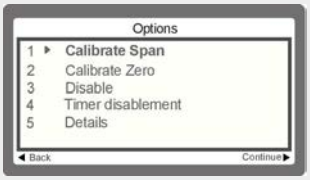
5	You have to confirm the disablement before you can proceed. Press to continue.	

6	You will get a confirmation message that the detector has been disabled. Press **Close** to continue.	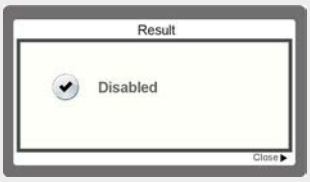
7	For the following steps in the zero calibration instruction proceed to the Salwico ST400 detector.	

' ' & . # /

"

A typical sign for when lifespan of the O_2 sensor is up is drifting values, instable readings and inability to set the 17.4 mA signal even with the SPAN potentiometer in max position.

1	Connect a Multi-meter (set to mA) to the test points and adjust the readout on the “SPAN” pot to 17.4 mA when normal breathing air is present.	

' , & . A /

For Zero adjustment a Nitrogen mix should be used, with a pure N_2/Nitrogen concentration.

A gas bottle with Hydrocarbons in N_2 can also be used, as long as the O_2 content is zero per cent.

We recommend the Consilium article no. **5201006-00A** with 100% N_2.

1	Connect a Multi-meter (set to mA) to the test points.	
2	Connect the gas bottle and open the regulator valve.	
3	Wait for the mA signal to drop and stabilize. Adjust the reading with the “ZERO” potentiometer to 4.0 mA.	

13.5 Reconnecting disabled detectors

All disablements in the Salwico GS5000 gas detection system are presented in the disablements list. Any enablement is made from this list.

1	Scroll to - 5 .
2	Choose the detector you just disabled and press .
3	Select 0 and press .

14 Appendix

14.1 Central Unit Terminal & Cabling Layout

Description of System Modules

The Salwico GS5000 gas detection system is based on standard modules. Below is a list of some common modules:

(
The Control M Gas is a control panel used to manage and supervise a gas alarm system. Control M Gas Internal mounts in the gas alarm cabinet front.

( ) *
The Control M Gas is a control panel used to manage and supervise a gas alarm system. Control M Gas External can be mounted on any flat surface or flush mounted, independently from a gas alarm cabinet.

+
A Control Module without display that can act as bus master or slave. It is used for providing additional communication channels in the system.

, (
A Module that provides 8 potential free contacts.

% - "
The Analogue M 4-20 is a transmitter module for a gas alarm system and provides four transmitter interfaces.

& (
This module provides electric isolation for a gas alarm system and backbone extension for module Control M Gas, as well as monitors the supply voltage and the Xgas signal.

. / &
The Power Boost M is designed to distribute power and supervise connections in a gas alarm system.

- . 0
This module protects power inputs for the Backbone Bus Internal. It provides terminal board for Backbone Bus External and electronic short circuit protected outputs for Control panels.

& 1
Is used for dividing the system backbone bus into segments. Can provide power to Control Panel M 4.3 and Control M 2.2.

. 2 % 3 $ %
A 5 ampere 115/230 VAC/VDC Power Supply.
PSU units can be used in pairs to supply 5+5 A.

For complete information, see the data sheet for each module.

An example of a central unit terminal layout with cabling

Since all Salwico GS5000 gas detection systems are tailored to each customer installation, no standard exists for how the different modules are to be connected in the system. However, in the figure below you will find an example with one module of each type showing the connection terminals.

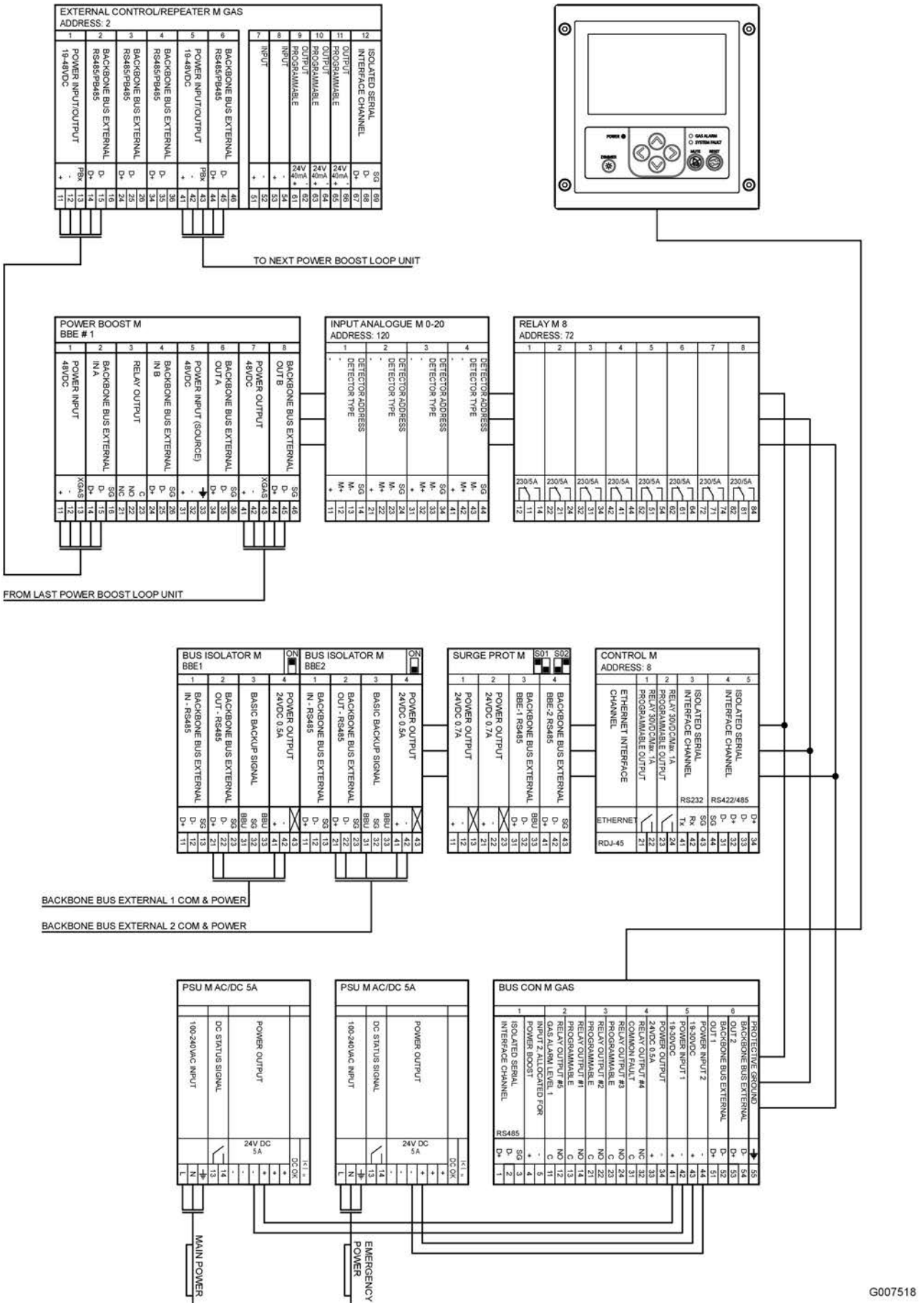

Figure 37. An example of a central unit terminal layout with cabling

14.2 RS485/PB485 Termination

14.2.1 General Recommendations for Installation of RS485

General recommendations for RS485 installation:

- Twisted pair wire should be used
- Shielded cables
- Star networks are not permitted
- Termination shall be made at each end of the bus with a 120 ohm resistor
- Max 700 m cable in one communications segment
- Two-wire connection shall be used when nodes have a common ground (-)
- Three-wire connection shall be used when nodes have a different ground (-), for example between Isolator M.

14.2.2 Application Examples for Installation of RS485

14.2.2.1 Terminating of BBE and Extensions bus

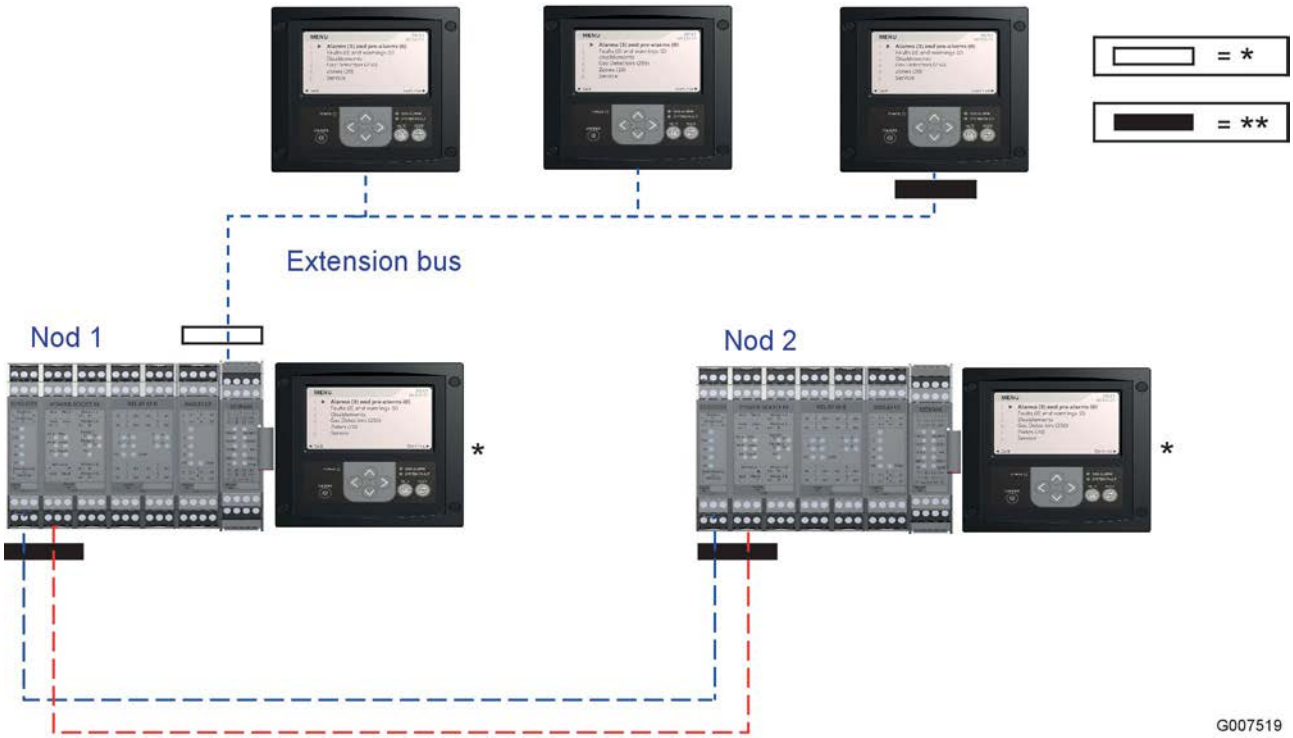

* Activate the built-in terminator (120 ohm).
See datasheet for location of the DIP switch.

** Terminator 120 ohm.

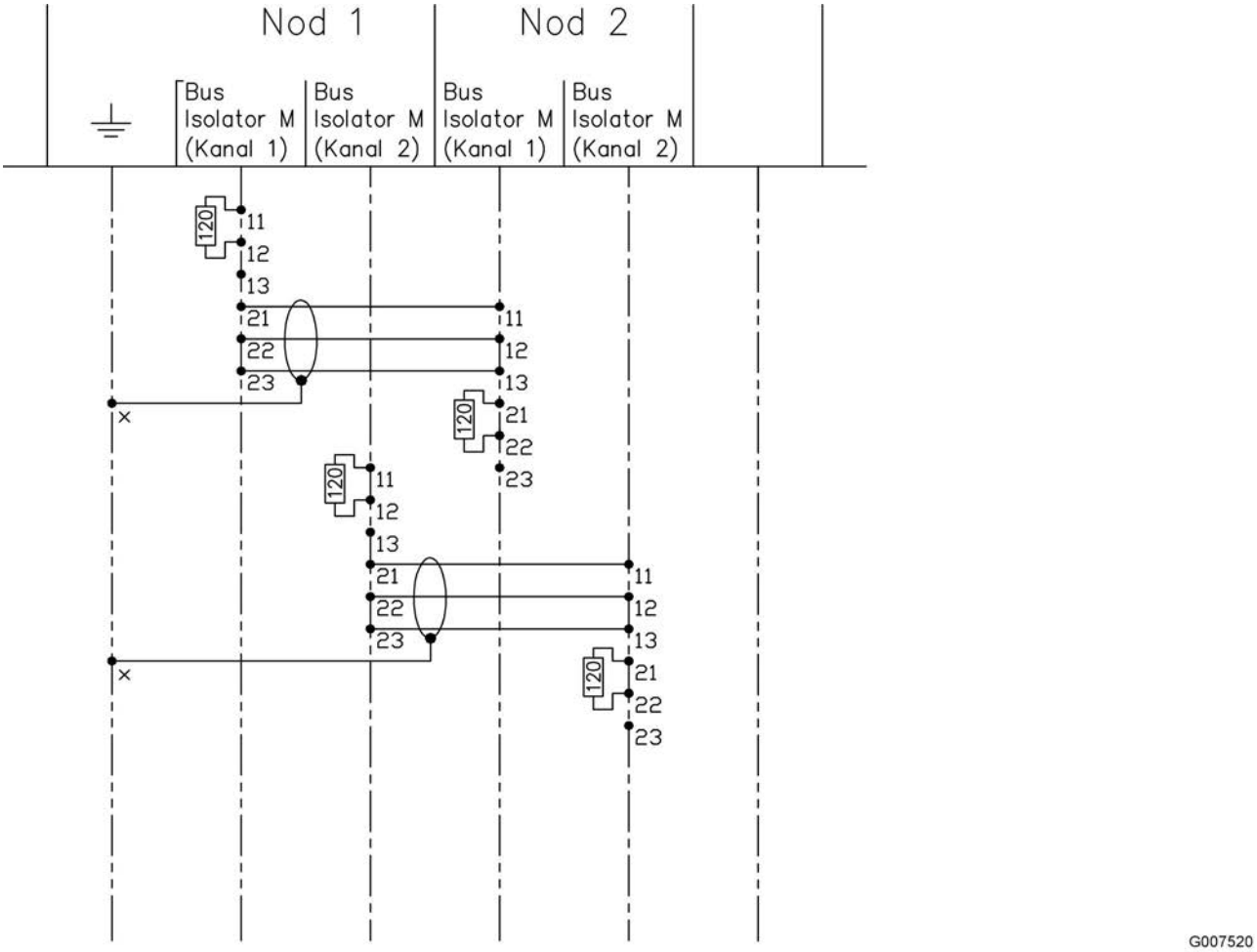

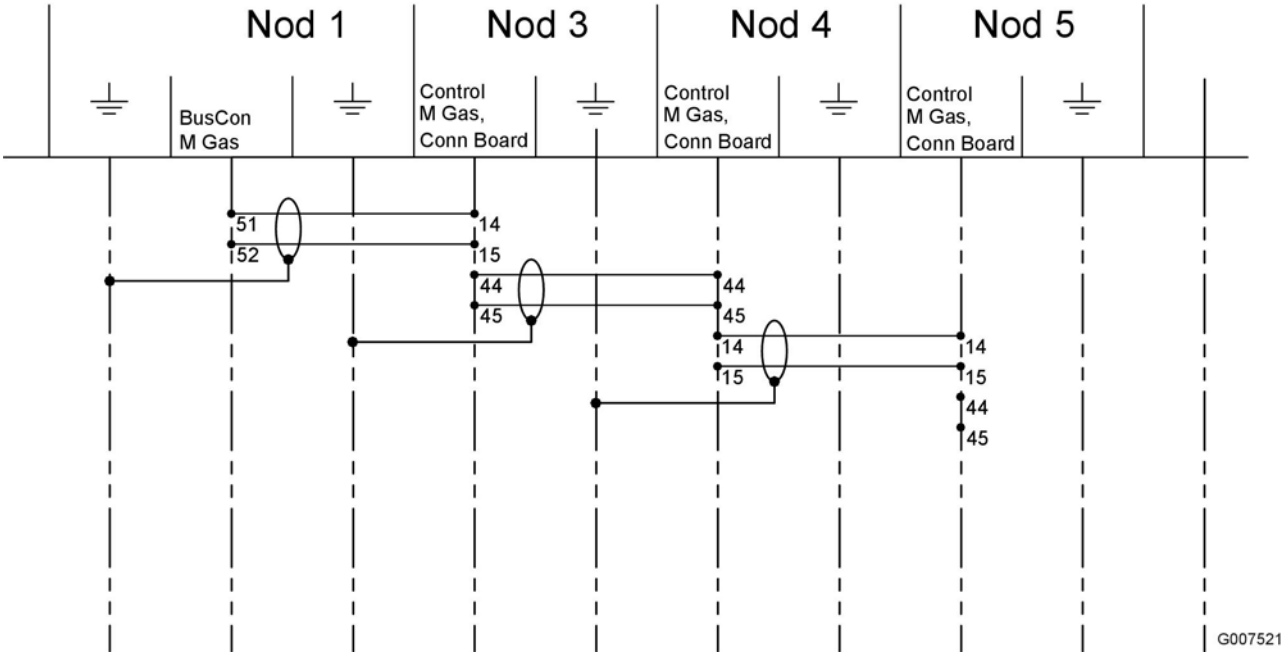

14.3 Fault Code List

Listed in the table below are all fault codes, their causes, and how an operator with knowledge of the system can solve the problem.

Table 4. Fault Code List

@			
1-6	The text generated for fault 1-6 is configurable via the configuration program for individual Gas Detectors, e.g. “DETECTOR FAULT” or “IR PATH OBSCURED”.	Corresponds to a fault interval generated by the gas detector, the configurable text gives the fault description. See the gas detectors documentation for details.	Check the details view for the gas detector to obtain the current generated information from the 4-20 mA interface and check the gas detectors documentation for details.
7	4	The current on the Analogue M 4-20 interface is above 25mA	Verify that the detector connected to this interface is working properly.
8	5 / 4 -	The voltage has dropped below 22 VDC	Verify that the PSU is supplying the system with the correct voltage. Nominal 24 VDC.
9	&	The Control M Gas reporting the fault has lost communicate with the BusCon M Gas	The Control M Gas reporting the error has been configured to be connected to a BusCon M Gas: 1. Check that the unit is connected to a BusCon M Gas and that there is no break on the cable. 2. If the connection is OK there is something wrong with the communication interface on the Control M Gas or the BusCon M Gas - try exchanging modules to identify the faulty module.
128	6 / Explanation: Lost communication. The system has recognized a unit but lost contact.	Wrong type of unit	Switch to the correct unit
		Two units have the same address (a secondary fault appears)	Check address of the units.
		Defect unit	Replace the unit.
		Cable break or short circuit in a loop (a secondary fault appears)	Locate the cable break or short circuit. Refer to the Installation manual: Trouble shooting
143	Explanation: The communication with a unit is deficient	Two units have the same address	Check the unit addresses. Refer to the Installation manual: Trouble shooting
		Faulty unit	Replace the unit.
		Interference from external source	Locate interference source. If not possible to solve the problem, contact an authorized service office
149	7	Short circuit detected	Locate the short circuit and restore operation
152	. -	Unit present but not configured	Verify if unit address is correct. Verify there is power to the module. Contact an authorized service office.
155	) 7 4	Earth fault on the positive conductor	Locate the earth fault. Refer to the Installation manual: Trouble shooting
156	) 7 - 4	Earth fault on the negative conductor	Locate the earth fault. Refer to the Installation manual: Trouble shooting

Fault Code		Cause	Remedy
159		A cable break has been detected	Restore the cable
167	7 8	Incorrect EPROM checksum	Contact an authorized service office
168		A module has restarted	If restarts happen repeatedly, contact an authorized service office
176	-	The configuration file is corrupt	Contact an authorized service office
		An error has occurred during downloading of the configuration file	
183	6 / 7 ! 8	Fault code generated when a module stops answering on channel 1 on the Backbone Bus	Contact an authorized service office
184	6 / 7 8	Fault code generated when a module stops answering on channel 2 on the Backbone Bus	Contact an authorized service office
185	6	Communication has been lost with the controller of the system (Control M Gas with address 1)	Verify that the Control M Gas panel is operational. Verify that all cables are connected properly.
210	3)	Fault detected in the configuration	Contact an authorized service office
213	- 7	The configuration file's in the system are not the same everywhere	Synchronise the configuration files between all panels
		Central X Module Y settings in configuration file compared to DIP-settings are not OK.	Check configuration and DIP-settings.
216	1 /	The firmware in a module does not comply with the modules hardware version. (Fault code generated by the faulty module.)	Contact an authorized service office
217	0 - 7 4 - !	The voltage from PSU 1 is too high. (Fault code generated by the Charger M modules.)	Adjust the voltage from the PSU 1
218	0 - 7 4 -	The voltage from PSU 2 is too high. (Fault code generated by the Charger M modules.)	Adjust the voltage from the PSU 2
225	* - -	The XGas signal in the backbone is corrupt	Contact an authorized service office
230	5 / 4 - 7 ! 8	Too low voltage detected on the Backbone Bus Power Supply, channel 1. (Fault code generated by the Charger M modules.)	Contact an authorized service office
231	5 / 4 - 7 8	Too low voltage detected on the Backbone Bus Power Supply, channel 2. (Fault code generated by the Charger M modules.)	Contact an authorized service office
232	1 4	Corrupt firmware	Contact an authorized service office
236	-	The type of module found is different from the type configured	Change the module or the system configuration

14.4 Definitions of Terms

Definitions of terms for the gas detection system

Alarm Condition	The state of the system when a gas alarm is detected.
Alarm Device	Device that is activated in case of a gas alarm, for example audible and optical alarms like bells, sirens and flashlights.
Alarm Levels	The Salwico GS5000 gas detection system has five different alarm levels: Gas alarm level 2, Gas alarm level 1, Gas pre-alarm, Fault and Warning.
Analogue M 4-20	The Analogue M 4-20 is a transmitter module for a gas detection system.
Backbone Bus External (BBE)	The main bus outside a Central cabinet used for communication between Modules and stretched central parts. It consists of two redundant RS485 channels, two 24 VDC power lines and the Basic Backup (BBU) signal.
Backbone Bus Internal (BBI)	The main bus inside a Central Cabinet used for communication between Modules. It consists of two redundant RS-485 channels, two 24 VDC power lines and the Basic Backup (BBU) signal.
Backbone Segment	A Backbone Bus may be split in several Segments. Power feeding can be separate for each segment by using one BusCon M Gas per segment. Communication can be isolated between segments by using Isolator Modules.
Basic Backup Signal (BBU)	A signal in the Backbone Bus that is used for transmitting the Central's alarm status. The signal is only used when a module in Managed mode loses communication with its Controller Module.
BusCon M Gas	The BusCon M Gas is a connection modul for a gas detection system.
Cause/Effect	The Cause/Effect program defines how the inputs and outputs of the system should react.
CCP Platform	An umbrella name for all the Modules and Devices that can be connected together, e.g. “the Control M Gas module is a member of the CCP Platform”.
Central	A Central is a complete system that can operate autonomously; monitor its detectors and inputs, activate its outputs and display its faults and alarms. A central can only have one Backbone Bus.
Central Cabinet	Enclosure to contain a complete or part of a central.
Control Module	The Control M Gas and the Control M X can all act as Controller Modules, i.e. be in Controller Mode.
Control Panel	The Control M Gas can act as a Control Panel, i.e. it has an HMI and the rights to manipulate and supervise the System.
Controller Mode	Control Modules can run in Controller Mode within a central. Control Modules can also be in managed mode, that is being a module that is managed by the master. All other modules are always running in managed mode.
Controller Module	A Control Module that is in Controller Mode in a Central or System.
DCS	Distributed Central System (see also Stretched Central).
Detector	A device capable of detecting gas alarms.
Disable all outputs	This mode is used for inhibit the detectors from generating the Alarm Condition but the alarms are displayed on the Control Panels to prove that the tested Detectors are operational.
Disablement	Disablement of devices such as a Zones or Detectors. Alarms from disabled devices will be inhibited.
External Communication	Communication to external entities is called external communication, using for example MODBUS or NMEA protocols.

External Control	Outputs used to control external equipment, for example ventilation.
Fault Condition	The state of the system when a fault is detected.
GDS	Gas Detection System.
I/O Module	A module with inputs and/or outputs. I/O modules always run in Managed Mode, that is they must be managed by a Controller Module.
I/O Pin or I/O Signal	An I/O Pin or an I/O Signal is a logical signal, compare to terminal.
Inter-central Communication	Communication between centrals is called inter-central communication.
Interface Channel	A communication channel used to interface the systems with external devices. Interface channels can be configured to communicate on different protocols.
Managed Mode	The opposite of Controller Mode. All modules that are managed by a Controller Module are in Managed Mode.
Mode of operation	Modules in the System can take on different roles. Connected to the Backbone Bus they can be in: • Central Controller Mode (Master) • Central Managed Mode
Module	A module that is a part of the Platform, that is can be used to build Centrals. Modules within the platform generally supply a Backbone Bus interface. Controller Modules also have an interface.
Module Address	Module Addresses are set via DIP switches on the Modules.
Mute	Acknowledge and silence the local buzzer and in some cases the alarm devices.
PA	Public Addressing.
PB-485	A special RS-485 driver for the communication on a Power Boost Loop.
Power Boost Loop	The Power Boost Loop is a subsystem in the gas detection system.
Power Boost M	The Power Boost M is designed to distribute power and supervise connections in a gas detection system.
Power Boost xGas (Pbx)	System function for transfer of xGas status between the Power Boost modules on a Power Boost Loop (Signal name PBxGas) and the modules connected to the Power Boost module on the internal Backbone Bus (BBI).
Power Output	Output providing power supply, normally used to power external devices.
Pre-Alarm Condition	A condition preceding the Alarm Condition to give early warning for potentially dangerous situations.
Programmable Output	Output which signal behaviour is configurable via the Configuration Program.
PSU	Power Supply Unit.
Redundancy	Refers to the quality or state of being redundant, that is exceeding what is necessary or normal. In the System the term is used to describe backup functionality like in Controller Modules.
Relay	Electrically operated switch output, normally providing C/NO/NC contacts for connection of signal receiver.
Safe State	Modules enter 'safe state' when they detect system faults. Modules in Safe State put their I/O in a predefined state and stop all communication in order to avoid disturbing system integrity.
SCS	Single Central System.
Stretched central (DCS)	A central that is physically distributed to two or more physical locations. One location may or may not supply power to another location (segmented) and two locations may or may not have isolated communication lines.
Terminal	A Terminal is a physical point of connection, compare I/O pin.

USB	Universal Serial Bus, a communications bus that may be used to connect flash memories, keyboards, mice or other devices.
Warning Condition	The state of the system when a warning is detected. Warnings are not as serious as faults and only of informative nature, for example that a Gas Detector is in need of calibration.
xGas	The Backbone Bus contains a signal, xGas, which will be activated by any module that detects a gas alarm.
Zone	A group of detectors located in a geographical area.

Index

A

Analogue M 4-20 69
Analogue M 4-20, Cable requirements 10
Analogue M 4-20, Connection example 13

B

Backbone Bus External (BBE), Cable requirements 8
Backbone Bus External (BBE), Electrical installation 8
Bus Isolator M 69
BusCon M Gas 69

C

Cable break, Trouble shooting 29
Cable lengths, Electrical installation 10
Cable markings 39
Cable requirements, Electrical installation 8
Cabling, Installation guidelines 37
Catalytic detectors 36
Central unit terminal layout with cabling 69
Channel 1 & 2, Cable requirements 8
Commissioning requirements 33
Configuration file 23
Control M Gas External 69
Control M Gas Internal 69
Control M X 69
Control panel display, Testing 29
Control panels, Mechanical installation 7
Control M Gas, Installation order 7
Control panels, Electrical installation 22

D

Download a configuration file 24
Download configuration file 31

E

Earth connections 15
Earth fault, Trouble shooting 30
Electrical siren, Installation guidelines 37
Electrochemical detectors 37

F

Fault list .....
Fault list .....

G

Gas detection system, System data .....
Gas detection system, System description .....
GD True IR, Calibration instructions .....
GD, Calibration instructions .....
Guidelines, Gas detectors installation .....

I

Installation guidelines, Cabling and electrical installation .....
Installation order, Mechanical installation .....
IR detectors .....

L

LED test .....
Location of sensors .....

M

Muting faults, Trouble shooting .....

P

Power Boost loop, Connection example .....
Power Boost Loops, Cable requirements .....
Power Boost loops, Verification of .....
Power Boost M .....
Procedure for installation commissioning .....
Protective earthings .....
PSU M AC/DC 5A .....

R

Reconnecting disabled detectors .....
Reconnecting disabled detectors .....
Reconnecting disabled detectors .....
Reconnecting disabled detectors .....
Reconnecting disabled detectors .....
Reconnecting disabled detectors .....
Relay M 8 Gas .....
Reset faults, Trouble shooting .....
RS485 Termination .....
RS485, Application examples for installation .....

S

Short circuit, Trouble shooting .....
Span calibration, GD .....
Span calibration, GD True IR .....
Span calibration, ST200 .....
Span calibration, ST400 H2S .....
Span calibration, ST400 H2S .....
Span calibration, ST400 O2 .....
Span calibration, ST600EX .....
Span calibration, ST700IR .....
ST200, Calibration instructions .....
ST400 H2S, Calibration instructions .....
ST400 O2, Calibration instructions .....
ST600EX, Calibration instructions .....
ST600EX-IR, Calibration instructions .....
ST700IR, Calibration instructions .....
Surge Prot M H .....
System modules, Description .....

T

Terminal layout, Electrical installation 21
Test for cable break 17
Test for earth failure 20
Test for short circuits 19
Test the control panel display 29

U

Upload a configuration file 23

W

Wrong number of gas detectors, Trouble shooting 29
Wrong number of system modules, Trouble shooting 29

Z

Zero calibration, GD 46
Zero calibration, GD True IR 42
Zero calibration, ST200 53
Zero calibration, ST400 H2S 63
Zero calibration, ST400 O2 67
Zero calibration, ST600EX 53
Zero calibration, ST600EX-IR 58
Zero calibration, ST700IR 58

Global Service and Support

Own companies

Sales- and service representatives

Consilium is constantly increasing and improving its global sales and service organisation in order to provide our customers with the most competent service and support. Today Consilium has established own companies in 16 countries plus sales and service representatives in more than 50 countries. You will find updated contact information on our web-site www.consilium.se.

Consilium

www.consilium.se

Gas Sampling System

Salwico SW2020

User Manual, LNG version

Consilium

The contents of this document are subject to revision without notice due to continued progress in methodology, design and manufacturing. Consilium Marine assumes no legal responsibility for any error or damage resulting from the usage of this document.

Consilium Marine AB
P.O.Box 8763
SE-402 76 GÖTEBORG
SWEDEN
Tel: +46-31-710 77 00, Fax: +46-31-710 78 00
E-mail: cmab.got@consilium.se
Internet: www.consilium.se

Edition E1 05 1 E, September 2005
Document number S-4-011.238/E
Article no.: 070085

© 2004 Consilium Marine AB
SE-402 76 Göteborg, Sweden

Contents

1. GENERAL INFORMATION **A**

1.1 DESCRIPTION OF THE SYSTEM
1.2 GENERAL BLOCK DIAGRAM

2. INSTALLATION **B**

2.1 CONTROL UNIT
2.2 ANALYZING UNIT
2.3 EXTERNAL ALARM PANEL
2.4 PIPE SYSTEM
2.5 FLAME TRAPS
2.6 MANUAL SHUT-OFF VALVES
2.7 SAMPLING PIPE ACCESSORIES
2.8 SAMPLING PONTS
2.9 OPTIONS

3. OPERATION **C**

3.1 GENERAL PRINCIPLES
3.2 STANDBY
3.3 LISTS
3.4 SETUP - GENERAL SETTINGS
3.5 SETUP - SAMPLING POINTS
3.6 CONTROL UNIT PANEL
3.7 ACTION DESCRIPTION
3.8 THE MINI REPEATER UNIT - MN400

4. TECHNICAL DATA **D**

4.1 INTERNAL CONNECTION
4.2 INTERNAL CONNECTION ON RIOK-40 AND RIOK-41
4.3 PNEUMATIC BLOCK DIAGRAM, ANALYSING UNIT
4.4 FLOW EXAMPLES
4.5 CALCULATION OF SAMPLING TIME
4.6 VACCUM PUMP
4.6 IR GAS DETECTOR GD10

5. SPARE PARTS LIST **E**

SPARE PARTS SET SW2020

6. PRODUCTS LIST **F**

1. GENERAL INFORMATION

1.1 DESCRIPTION OF THE SYSTEM

The SW2020 Gas Sampling System is an automatically scanning Gas Sampling System permanent installed for a number of sampling points. The gas detectors are common for all sampling points, allowing the use of high quality gas detectors with good accuracy. A gas sample is taken from each sampling point in turn, according to the sampling sequence, and transported through the sampling pipe to the gas detectors. The sampling time for each point is individually adjustable corresponding to the pipe length of each sampling point. This gives an optimally short cycle time.

The SW2020 Gas Sampling System is intended for detection of explosive and toxic gases in cofferdams, pipe tunnels, stools, ballast tanks, slop tanks and other areas adjecent to cargo tanks. A pump room installation is normally a separate system. The SW2020 is designed to meet the requirements of IMO/SOLAS and classification rules.

Individual sampling point settings
Each sampling point can easily be operated from the control unit and it has individual settings for:

- Sampling time as a function of pipe length.
- Gas detectors (up to 4) connected for monitoring samples. For example %LEL, Vol% and ppm.
- Alarm levels for low and high alarm for each detector and each sampling point..
- Clear text information.

Programmable scanning sequence
Each sampling point can easily be operated from the control panel. For permanent installations in ballast tanks or other areas, which may periodically be filled with fluid, a counter pressure system is automatically protecting the pipes with a gentle flow of air, preventing clogging.

The sampling time for each disconnected sampling point is deducted from the cycle time, thus reducing the cycle time for the remaining sampling points.

The SW2020 Gas Sampling System also gives the possibility to define the sampling sequence enabling certain points to be sampled more frequently.

A flow fault on a sample point will activate the Automatic Pipe Cleaning System (APCS). The APCS will first attempt to remove the cause of the flow fault by flushing the sampling pipe and then try to obtain a new sample. The sampling point is automatically disconnected and the fault is transferred to the Fault List if the flow fault remains.

The last measured gas value for a sampling point can be viewed in the Sampling Point List. Manual Measurement and Purge on a selected sampling point are also done from this list.

A test gas cylinder is connected to or built into the system for calibration of the gas detectors.

The SW2020 system consists of four parts

Control Unit
The control unit contains control functions and display for the system and is normally located in a cargo control room.

Analysing Unit
The analysing unit contains all functions for detecting and transporting the test samples, as well as an internal sampling point for monitoring of internal gas leakage. The analysing unit is installed in a ventilated area with controlled temperature above main deck level, normally the Cargo Control Room.

Repeater Unit(s)
The repeater unit contains a clear text display for alarm and fault messages. One unit is normally located in the Wheel House.

Pipe System
The pipe system transports the test samples from the sampling points to the analysing unit. The pipe system includes shut off valves, flame traps, filters and cones (for WB tanks).
Recommended pipe size: OD 8 mm, ID 6 mm.

2. INSTALLATION

2.1 CONTROL UNIT

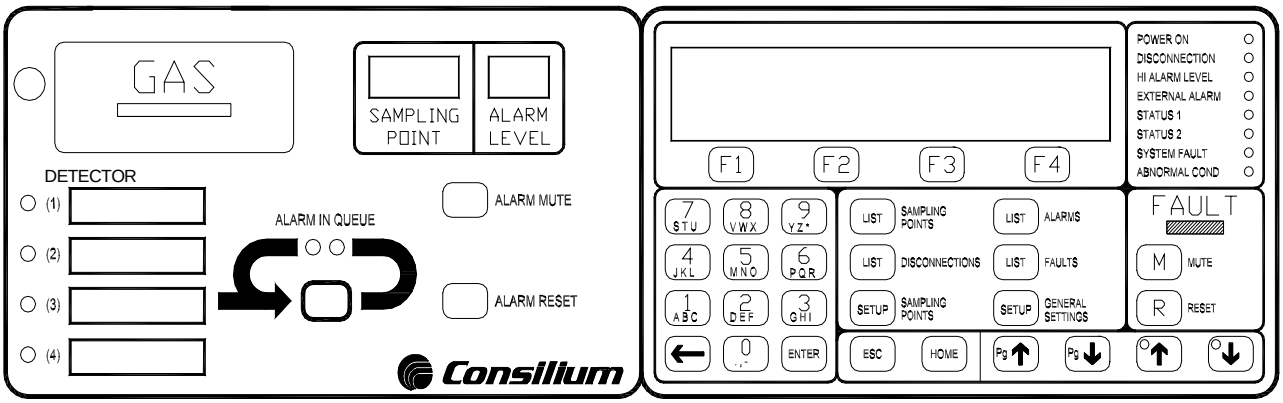

The control unit is the man-machine interface and controls the electronics in the analysing unit. It consist of a LCD clear text Display, LED Display, LED's, keyboard, microprocessor and memory for the software, definitions, additional texts etc. The unit is normally made for wall mounting and should be placed in a well visible position e.g. cargo control room. Electrical connection terminals to the analysing unit, the repeater unit and the optional printer are placed in the bottom of the control unit cabinet.

As an alternative both the control unit and the analysing unit can be delivered in one single cabinet.

The SW2020 control unit is divided into two parts; the gas alarm panel and the operating panel.

The gas alarm panel is activated when a gas alarm situation is detected in the system. The sampling point number, alarm level (LO or HI) and the actual gas detector in alarm are displayed.

There are three keys on the operating panel. The Alarm Mute key is used to acknowledge the gas alarm and the Alarm Reset key is used to reset the gas alarm. The third key Alarms in Queue is used to toggle the sampling points in alarm.

The Operating Panel continuously shows, in the clear text display, sampling point and the last measured value.

The Fault LED is lit and a fault message is shown in the clear text display when a fault alarm is generated.

The List and Setup keys are used to manage the gas sampling system. The numeric key pad is among other things used for value settings and clear text setup.

2.2 ANALYSING UNIT

The analysing unit contains all functions for detection and transport of the test samples. Its components comprise:gas detectors, solenoid valves, sampling and transport pump, flame traps, flow meter, remote I/O - PCB-boards, power supply unit and terminals for power supply, alarm outputs connection to the control unit and repeater unit as well as connections for all piping included in the system.

The analysing unit should be installed not less than 3 metres above the main deck in order to avoid air locks in the pipes and ensure the correct work of the automatic flow watching function. The area should be ventilated and temperature-controlled.

For installation and for the future service work, there must be enough space, approx. 0.5m, at the pipe connection side. Normally the left side.

There are removable plates intended for the installation of cable inlets on the underside of the cabinet, for electrical connections.

The electrical connections are made in accordance with the electrical drawing in this chapter.

2.2.1 Pipe Connections

Suction Pipes

The sampling pipes from the manual shut-off valves are connected to the premounted and numbered flame trap on the side of the analysing unit by means of the stainless steel connection nipples on the flame traps.

NB! These nipples should be tightened with a spanner, 1.25 turn only, from the hand tightening stop. If dismounted the nipple should be retightened to exactly the same position during re-mounting.

The pipes between the analysing unit and the normal shut-off valves should be mounted in such a way that air locks do not occur.

Also note that the pipes should be installed in such a way that service can be performed on an individual flame trap as well as on On-Line Filters without unnecessary dismounting of other pipes.

Exhaust Pipe
The exhaust pipe from the analysing cabinet is connected via a nipple at the intended site and should be mounted with a slope towards the exhaust point. Refer to page B4.

Fresh Air Pipe
The fresh air pipe to the analysing cabinet should be connected via a nipple at the intended site. The air inlet can open up directly into the room where the analyzing unit is installed, provided that the atmosphere in the room is clean and temperature controlled. Otherwise a pipe leading to such a space must be installed. Refer to page B4.

Instrument air 5 - 16 Bar inlet
The inlet pipe for dry instrument air is connected to the analysing unit via a nipple at intended site. Refer to page B4.

2.2.2 Calibration Gas Cylinder

The calibration gas cylinder is mounted inside the analysing cabinet and fixed in the conventional manner for pressure vessels.

2.3 REPEATER UNIT

The function of the LCD repeater units is to indicate alarms and faults to the duty watch personnel. The unit is designed for wall or panel mounting and should first of all be placed on the bridge in a well visible and easily accessible location.

The LCD-display indicates in clear text the sampling point(s) in alarm, alarm level(s) and fault messages.

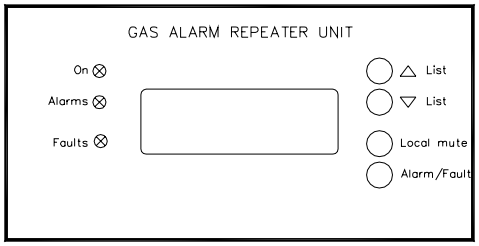

2.4 PIPE SYSTEM

The pipe system transports the test samples from the sampling points to the analysing unit. In addition to the piping, the system includes: shut-off valves, flame traps, pipe couplings, sleeves, filters and pipe terminations.

When the sampling pipes are installed, care should always be taken that the pipes are installed in such a way that the risk of air locks is avoided.

There are two main ways of installing the piping from the analysing unit to the various sampling points; either the pipes are installed above deck or through the pipe tunnel, or a combination of both methods. Note that pipes installed above deck must be protected against mechanical damage. Refer to drawing on page B7 of this manual.

All pipe couplings with conical seals forming part of the pipe system should always be sealed with Loctite 577. (NB! Not thread tape).

2.4.1 Pipe Suspension

Suspension of the pipe assembly or individual pipes should be made in such a way that the distance between the suspension points does not exceed 1 metre.

The pipes should also be fixed in such a way that vibrations or other similar actions do not damage them. When installing the pipes, care should be taken not to allow them to become deformed.

The drawing on page B16 of this manual shows a proposed method of suspension and fixing.

2.4.2 Sleeves and Bulkhead Passages

Some type of passage arrangement must be used when passing through deck or bulkhead plates. Such proposed units are shown on drawings on page B15 and B16 of this manual.

2.4.3 Pipe Couplings

Efforts should be made to ensure that as few pipe couplings as possible are used for each sampling pipe. This to avoid unnecessary air resistance in the pipes caused by turbulence due to uneveness of the joints, and also to reduce the possibility of leakage to a minimum.

When a pipe cut is necessary, make sure that the pipe is not deformed at the cut and that the air flow resistance is not increased. Also note that capillary connections has to be carefully soldered to avoid unnecessary air flow resistance.

Each manufacturer's individual recommendations on tightening should be observed when installing those pipe couplings that must be used.

2.4.4 Bending of Sampling Pipes

In order to avoid unnecessary air resistance in the sampling pipes and risk of deformation and the formation of fractures, a minimum bending radius of approx. 150 mm is recommended.

Refer to separate instructions for installation of other components of the pipe system.

- Flame Trap (analyzing unit) - Chapter 2.5
- Manual shut-off valves - Chapter 2.6

2.4.5 Pipe installation check

NB. 1. Before connection of the sampling pipes to the Analysing Unit and to the On-Line-Filters: Always flush the pipes with compressed air in order to clean them from dust and water. After cleaning, finish the complete connection between the Analysing Unit, Shut Off Valves, On Line Filters and Pipe end Accessories.

NB. 2. A test has to be performed on every sampling pipe, to verify that there are no leakages. Also verify that each sampling point is correctly connected to the Analysing Unit. It is possible to do a test of the air tightness by disconnecting the tubes one by one inside of the cabinet and perform the test by connecting a manometer, shut-off valve and compressed air.

2.5 FLAME TRAPS

The flame traps are normally supplied fitted to the analysing unit. Refer to the installation instructions for the analysing unit in Chapter 2.2.1 for pipe connection instructions.

NB! The flame trap must be of an approved type.

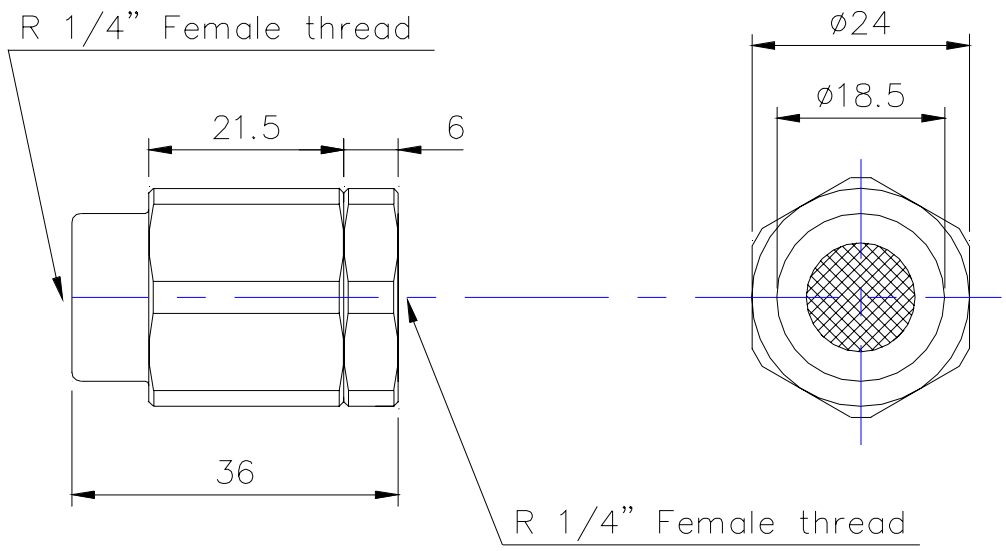

2.6 MANUAL SHUT-OFF VALVES

The task of the manual shut-off valves is, where necessary, to shut off the pipe system in an explosion risk zone from the system in a safe zone. This may occur when a certain sampling area has a temporary high gas concentration or is filled with inert gas. The shut-off valves should also be used for service needs, such as replacement of flame traps, or if a certain sampling pipe is disconnected from the analysing unit.

When there is no compressed air in the counter pressure system combined with water in the space where the sampling point pipe end is situated, a closing of the shut-off-valves is recommended to avoid water and dirt inside the sampling pipes.Notice that as long as there is compressed air to serve the counter pressure system in water filled ballast tanks, the shut off valves shall remain open.

Installation of the valves shall be made in the wall between the safe and explosive zones. Holes are cut for the insertion of welding sleeves with an internal thread, the shut-off valve then being screwed on from inside a safe zone by means of taper thread couplings supplied and sealed with ”Loctite 577”.

NB! All valves should be marked with the number of the corresponding sampling point.

It is important that the mutual distance between the valves is taken into consideration, and that the sampling pipes from the analysing unit are installed in such a way that any service on an individual shut-off valve can be carried out without any unnecessary dismounting of other pipes.

Stainless steel type, art.no. 4233

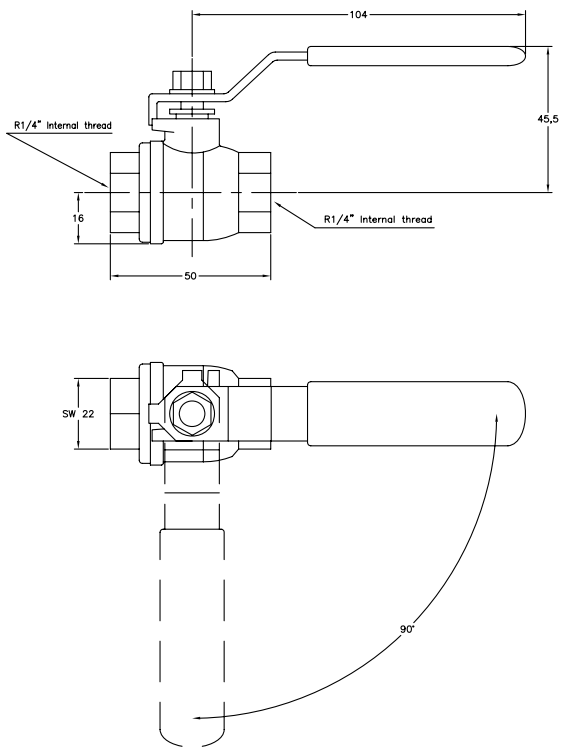

Brass type, art. no. 4232

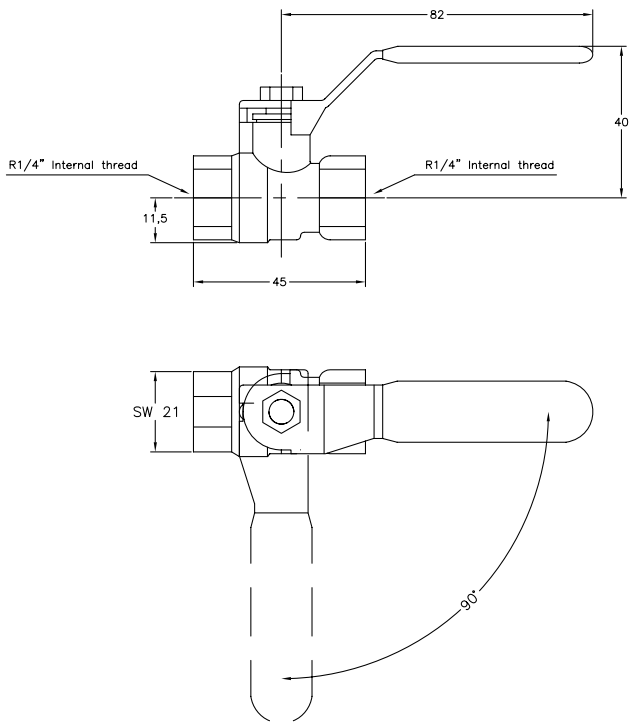

2.7 SAMPLING PIPE ACCESSORIES

2.7.1 Filters

Each individual sampling pipe should be protected with filters in order to avoid fouling of both the pipes themselves as well as flame traps, valves, flow meter and detector.

Two types of filters have been developed for this purpose. One type for mounting on the pipe, ”On-line filter”, and a second for mounting at the end of the sampling pipe at the sampling point, ”End-line filter”.

On-Line Filter

This filter is used for such sampling pipes where end-line filters cannot be used for a variety of reasons, such as areas which may be termporarily water-filled or where access is for other reasons, so difficult that necessary filter replacement may be impaired or neglected.

Installation of on-line filters must be done in such a manner that the filter is easily accessible for replacement, without causing unnecessary strain on pipes and connections. The online filter should always be placed as close to the sampling point as is practically feasible. But never in a safe zone. The nipples should be tightened in accordance with pipe connections chapter 2.2.1.

We recommend that each individual filter should be marked with its corresponding sampling point number.

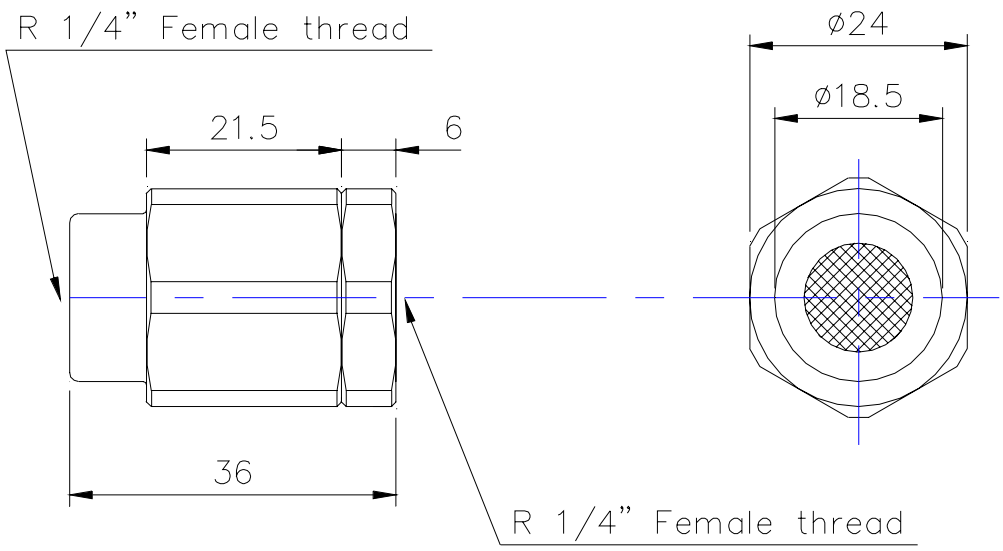

2.8 SAMPLING POINTS

2.8.1 Pipe Terminations

The pipe termination in the sampling area must be fixed so that the minimum distance from a bulkhead frame is 0,1 m. In filter installation, e.g. end-line filter, the positioning should be taken into consideration with respect to this.

In certain areas care must be taken to prevent oil or water from being sucked into the sampling pipes.
Corners, where the air circulation is low, should be avoided. Note that the last 0,2 m of the pipe termination end must point downwards.

Each pipe termination should be marked with the corresponding sampling point number.

2.8.3 Marking of Sampling Points

Each sampling pipe must be marked with its number at the sampling point as well as the manual shut-off valve. (Each sampling point is numbered at the flame trap on the analysing unit.)

2.9 OPTIONS

2.9.1 Counter pressure System

The counter pressure system is to be used for such sampling points which are located in areas that can be temporarily filled with water, for example permanent water ballast tanks.

The counter pressure system, when supplied, is built into the Salwico SW2020 system. The operation of the counter pressure system is based on compressed air being automatically connected to sampling points, during the not sampling periode and when the sampling point is temporarily disconnected from the automatic scanning.

Note! The hand maneuvered shut off valve in the bulkhead passage shall remain in open position when the sampling point is disconnected via the control panel. Only in case of loss of the supply of compressed air or when the pipes by some reason are mechanically disconnected between the analysing unit and the bulkhead, the shut off valves for safety reasons shall be closed.

Counter pressure system installation requires connection of compressed dry instrument air to the analysing unit.

Incoming operating pressure: 5 - 16 Bar.
Pressure regulator set to 3.4 Bar.
Max air consumption: approx. 10 - 20 litres/hour for each sampling point .

2.9.2 Pipe Cleaning System

A pipe cleaning system is recommended for blowing the pipes clear of water.

The pipe cleaning system, when supplied, is built into the Salwico SW2020 system. Its installation requires connection of compressed dry instrument air to the analysing unit.

Incoming operating pressure: 5 - 16 Bar.
Pressure regulator set to 3.4 Bar.

Note! When both a pipe cleaning and a counter pressure system are included in the SW2020 the same compressed air connection is used jointly .

Shut-off valves

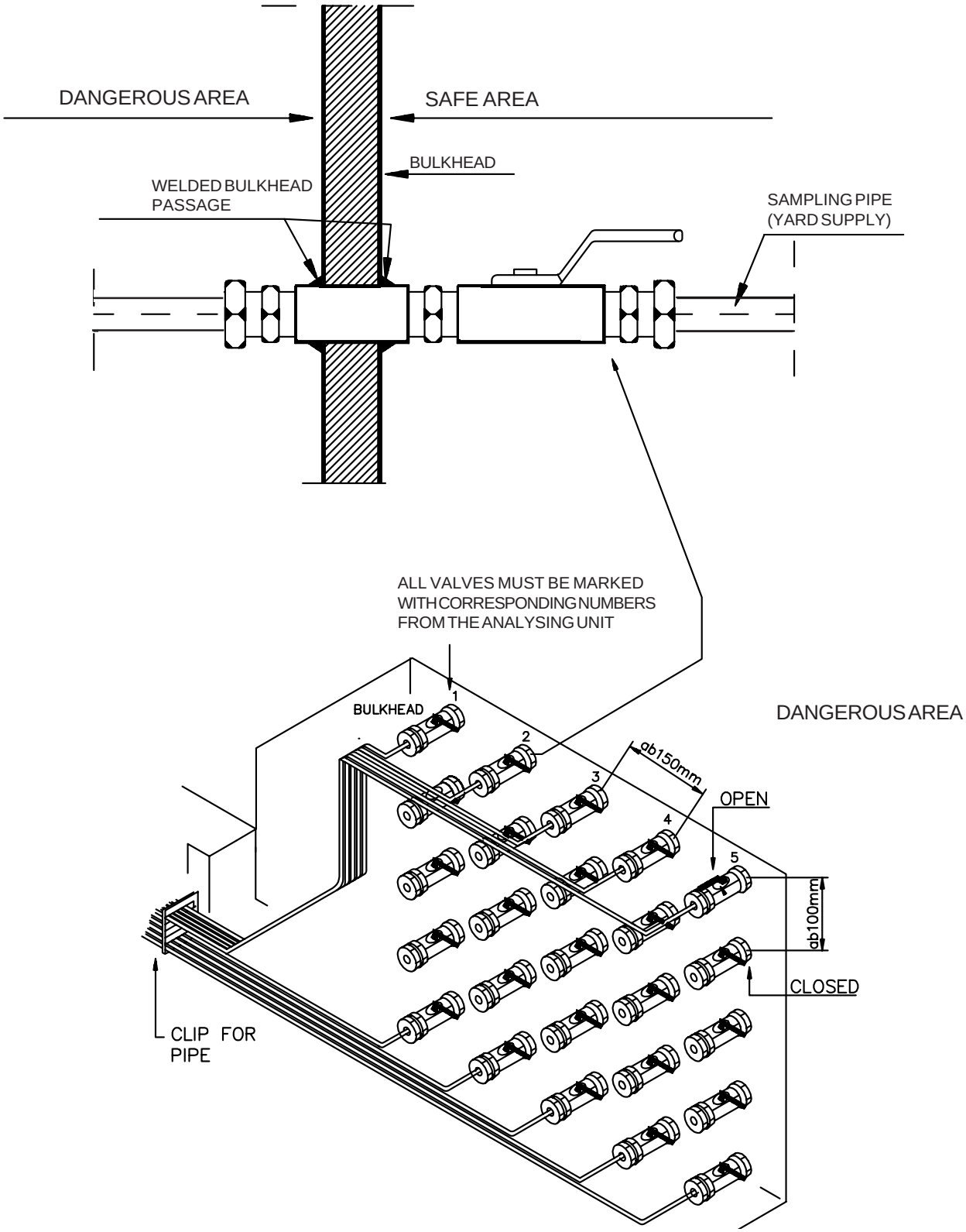

Suspension and fixing

CLAMP FOR PIPE
on the deck/deckhouse

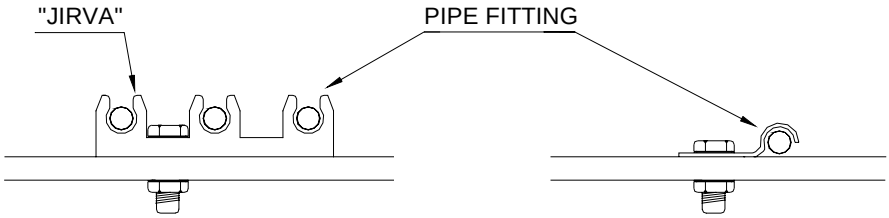

CLAMP FOR PIPE
in the pipe tunnel/
cofferdams etc.

ALTERNATIVE:

1

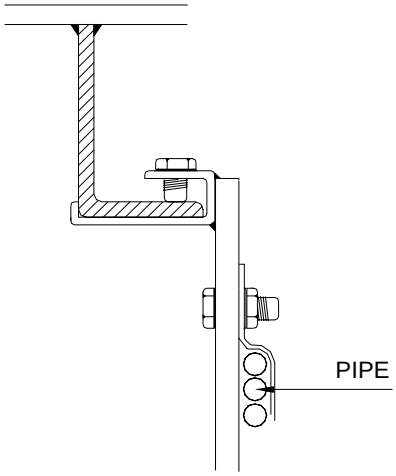

2

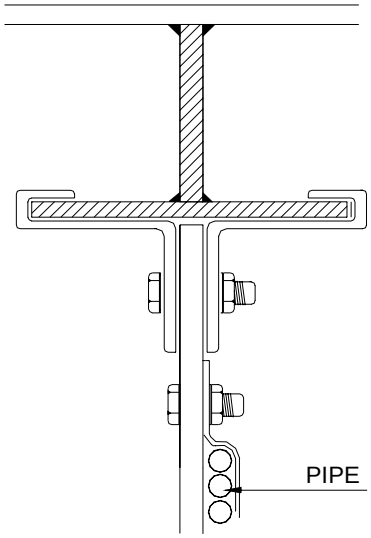

3

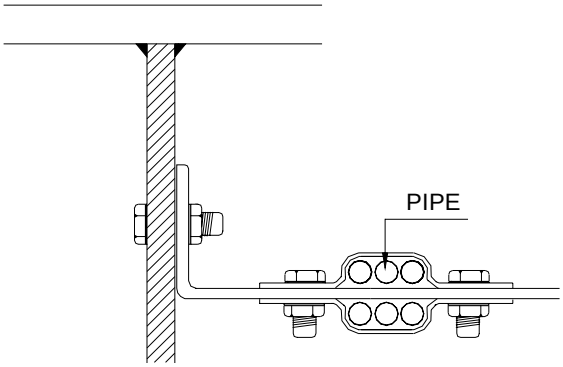

Electrical Connections

External connections

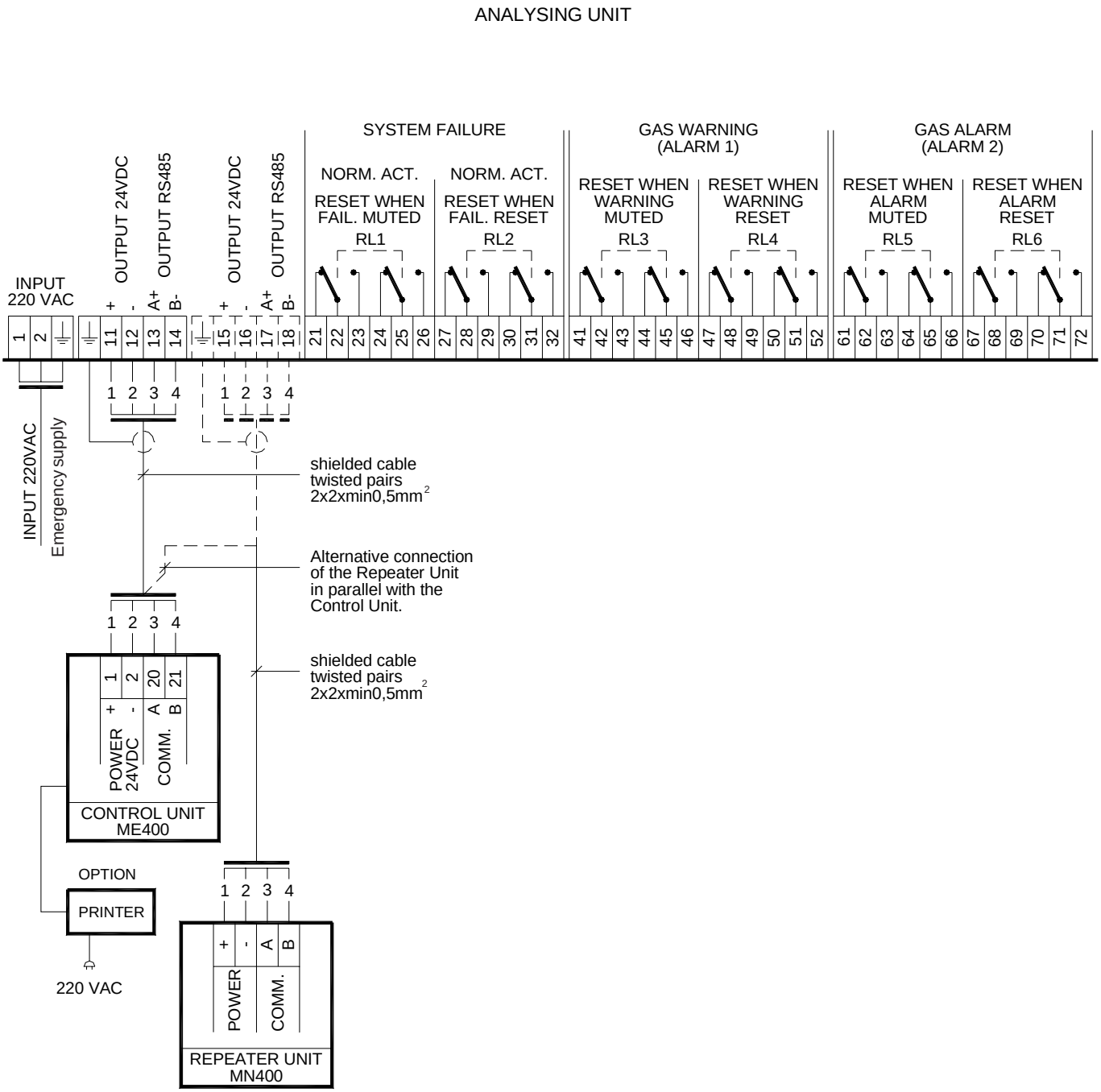

GAS SAMPLING SYSTEM SW2020

	SAMPLING POINT COMMISSIONING DATE:			
POINT NUMBER	LOCATION	DISTANCE	SAMPLING TIME SET	
1				
2				
3				
4				
5				
6				
7				
8				
9				
10				
11				
12				
13				
14				
15				
16				
17				
18				
19				
20				
21				
22				
23				
24				
25				
26				
27				
28				
29				
30				
31				
32				
33				
34				
35				
36				
37				
38				
39				
40				
41				
42				
43				
44				
45				

3. OPERATION

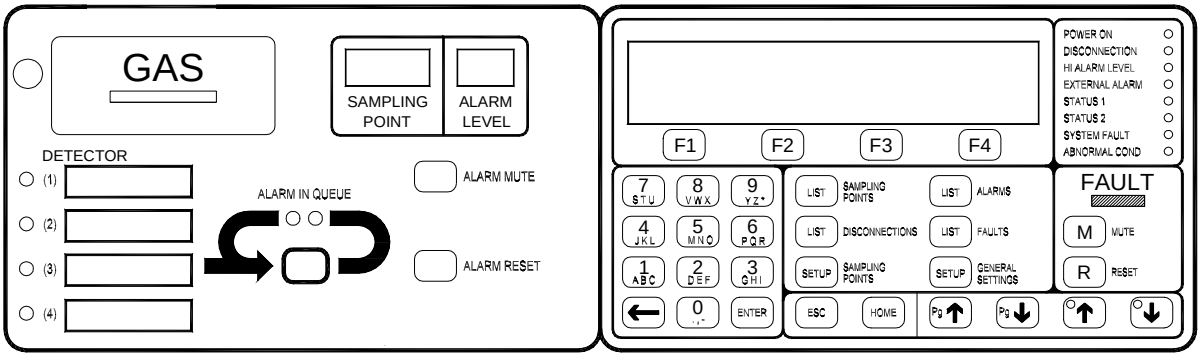

3.1 GENERAL PRINCIPLES

The Control Unit of the SW2020 Gas Sampling System is divided into two separate parts.

The left-hand side consists of only three keys: ALARM MUTE, ALARM RESET and ALARM IN QUEUE. The ALARM IN QUEUE key is used to find a gas alarm in the gas alarm list and the two other keys to either mute or to reset an alarm (the gas level is measured again to see if the alarm condition has disappeared).

The right-hand side is used for operation of the system. Just press one of the six LIST and SETUP keys to start managing the system. All six keys will open a list of items (sampling points, alarms etc.).

Use the four arrow keys to find the item you want and use the function keys to select an action to perform.

You could for instance make a manual measurement on sampling point number 5 (SP5) by first pressing LIST – SAMPLING POINTS, then choose SP5 with the arrow keys and finally press F3 (MEASURE) to start measuring on SP5. The display should now look like below.

```
sp5 - Water ballast tank 2 STB
Current: 5          New: _
Enter manual measurement time in minutes
   MEASURE
```

Some menus require a numerical input. Manual measurement is one of them. Enter a new value with the numerical keyboard. Press ENTER to change the new value into the current value and press F1 to start measuring.

Just press F1 if you want to start measuring using the default value (5-minutes).

The display will now show the measurement value on the selected sampling point.

```
sp5 - Water ballast tank 2 STB
Remaining measurement time 4:43
12 %LEL CxHy
```

The system used in the examples in this manual consists of 60 sampling points and one detector measuring hydrocarbon gases (CxHy).

3.2 STANDBY

The control unit is in standby mode most of the time. The display below shows that the measurement sequence is running. The system always displays the last measurement.

```
** RUNNING **                    <12:01:54>
sp5: Water ballast tank 2 STB
                    0 %LEL CxHy
```

The standby menu displays the system status. Another message could be:

```
** STARTUP **                    <12:01:54>
              Please wait -
                              System check
                    in progress...
```

The standby mode can be identified by the clock in the upper right corner and can be reached by pressing the HOME key. The control unit will automatically return to standby mode 30 minutes after the last keyboard entry.

3.3 LISTS

All operations required by the average user can be performed from the four lists in the system.

ALARM LIST

The left-hand side of the control unit always displays the sampling point in alarm (1-60) and the alarm level (Hi or Low).

Mute gas alarms by pressing ALARM MUTE and reset gas alarms by pressing ALARM RESET. Press ALARMS IN QUEUE to display the next gas alarm (if any).

When you want more detailed information about an alarm press LIST ALARMS on the right-hand side of the control unit. This list is opened automatically when a new gas alarm is detected. Use the arrow keys to display the next and previous alarms.

The display below shows the first alarm of three. The alarm occurred on sampling point 1 and 43 %LEL CxHy (Alarm level 'Hi') was measured.

```
** ALARM LIST 1(3) **
sp1: Water ballast tank 1 STB
43 %LEL CxHy(Hi)
```

FAULT LIST

Press LIST FAULTS, on the right-hand side of the control unit, to display the faults in the system. This list is automatically opened when the system detects a fault.

The display below shows the first fault of two. Fault code 15 with an explanatory text is displayed.

```
** FAULT LIST 1(2) **
Fault(15) repeater unit 1 no answer
```

Mute faults by pressing the FAULT MUTE key and reset faults by pressing the FAULT RESET key.

Fault codes

The following faults can be detected. See section C, part 3.7, for a more thorough explanation of the fault codes

(1) Analyse pump, flow failure
(2) Bypass pump, flow failure
(3) Analyse Pump or Internal Leakage
(4) Calibration
(5) Detector 1, (Gas type + type of detector fault)
(6) Detector 2, (Gas type + type of detector fault)
(7) Detector 3, (Gas type + type of detector fault)
(8) Detector 4, (Gas type + type of detector fault)
(9) Moisture in analysing unit (option)
(10) Fault compressed instrument air
(11) Power fault (option)
(12) Flow fault on SP #
(13) Fuse fault in control unit
(14) Low 5 volt in control unit
(15) Repeater unit # no answer
(16) Repeater unit # booted
(17) Analyse unit no answer
(18) Analyse unit booted
(19) No custom setup, using factory (or default) setup
(20) Flash memory error in control unit
(21) Negative drift, analyser 1 (Abnormal condition)
(22) Negative drift, analyser 2 (Abnormal condition)
(23) Negative drift, analyser 3 (Abnormal condition)
(24) Negative drift, analyser 4 (Abnormal condition)

SAMPLING POINT LIST

Press LIST SAMPLING POINTS to enter the Sampling Point List.

Select a sampling point with the arrow keys (sampling point 5 is selected in the example below) and then use the function keys to perform an action.

```
** SAMPLING POINT 5(60) **
sp5: Water ballast tank 2 STB

 VALUES  DISCONNECT   MEASURE   PURGE
```

The following actions can be performed on a sampling point:

- VALUE – Display the value of the last gas measurement
- DISCONNECT – Disconnect for a period of time or forever (OFF). **Before ballasting**: Always disconnect the corresponding sampling points. The counter pressure will automatically engage for sampling points with this feature.
- MEASURE – Start measuring the gas concentration. Make a prompt check of the actual gas concentration on the selected sampling point. The measurement time can be set in minutes but newer below the set-up time (depending on the pipe length). The gas value(s) are continuously updated during the measurement and a Gas Alarm (high or low) will be generated if the corresponding value is still exceeded when the measurement value is stable.
- PURGE – Clean the pipe for that particular SP during 2 minutes. An automatic decompression is done through the internal SP in order to protect the pressure switch and pump membrane before commencing the measurement sequence. The decompression time is 10 seconds.

Actions such as purge and manual measure can not be performed on disconnected sampling points. The only allowed action on a disconnected sampling point is RECONNECT.

After a MEASURE or PURGE manoeuvre, the normal measurement sequence is commenced at the SP that was interrupted.

IG Mode (option)

IG (Inhibit Gas-Alarm) Mode is a type of disconnection used for areas where high contamination levels are expected. The detectors inhibited from giving alarm in IG Mode are configured on delivery.

IG Mode is typically used for measuring gas levels in tanks with inert gas. In this case, for instance O2-detectors are inhibited from generating alarms when the sampling point is in IG Mode.

```
** SAMPLING POINT 5(60) **
sp5: Water ballast tank 2 STB

 VALUES  DISCONNECT   MEASURE   PURGE
```

Pressing F2 (DISCONNECT) in the menu above will result in an additional option on button F2 (IG-MODE):

```
Sp5: Water ballast tank 2 STB
Current: Forever    New:
Enter disconnection time in minutes
DISCONNECT  IG-MODE
```

Pressing F2 will now put the selected SP in IG Mode.

In contrast to SP’s disconnected in the traditional way (the airflow is stopped) it is still possible to manipulate the SP.

```
** SAMPLING POINT 5(60) **
sp5: Water ballast tank 2 STB

 VALUES  RECONNECT    MEASURE   PURGE
```

Sampling Point Groups (option)

Sampling point groups are used in installations with many sampling points to make the daily handling with disconnecting and reconnecting sampling points more efficient.

Sampling point 1 to 8 are members of group 1 in the example below. The group members and the free text on row 2 (STB Water ballast tanks, SP 1-8) are configurable in SETUP but requires access level 2.

A group can be disconnected:

```
** GROUP 1(3) **
Grp1: STB Water ballast tanks, SP 1-8

          DISCONNECT
```

And reconnected again, the user will be asked to automatically purge all sampling points in the group (recommended). Take care when reconnecting a whole group - make sure that all areas are empty and do not require IG Mode (if that option is implemented).

```
** GROUP 1(3) **
Grp1: STB Water ballast tanks, SP 1-8

RECONNECT
```

Sampling points belonging to a group can still be disconnected or reconnected individually, this makes the situation below valid since the SP's in a group can have mixed disconnection status.

```
** GROUP 1(3) **
Grp1: STB Water ballast tanks, SP 1-8

RECONNECT DISCONNECT
```

DISCONNECTIONS LIST

Press LIST DISCONNECTIONS to enter the Disconnection List.

Disconnected sampling points are listed here. Reconnect the chosen sampling point by pressing F1 (RECONNECT).

```
** DISCONNECTION LIST 1(3) **
sp 5 disconnected
sp5: Water ballast tank 2 STB
 RECONNECT
```

IG Mode (option)

Sampling points in IG Mode are added to the Disconnection List.

```
** DISCONNECTION LIST 2(3) **
sp 6 disconnected (ig mode det 2,3,4)
sp6: Water ballast tank 3 STB
 RECONNECT
```

3.4 SETUP – GENERAL SETTINGS

The system changes the access level and enters CONFIGURATION MODE when the correct access code for level 2, 3 or 4 is entered. The system will not start until the user chooses to start the system again (the access level is automatically changed back to 1) or the user timeout expires after 30 minutes.

Choose a menu with the **Arrow Keys**. The menu numbers in this document are shown between brackets in each header.

General settings - access level 1

Change access level (1)

Enter a 4-digit access code and push ↵. The result of the operation is displayed on row 3. The sampling sequence is stopped when the access level is changed to 2 or higher.

```
(1) Change access level
Current: ****       New:
Enter a 4-digit access code
```

Change access level code (2)

Enter the access level you want to change access code for, push ↵ and then **F1** to continue. The code can only be changed for access levels lower or the same as the current access level (level 2 in the example below).

```
(2a) Change access level code
Current: 2          New:
Enter an access level (1-3)
  CONTINUE
```

Enter the new 4-digit access code, push ↵ and then **F1** to continue.

```
(2b) Change access level code
Current:            New:
Enter the 4 digit access code
  CONTINUE
```

Enter the same access code again and push ↵. The result of the operation is displayed on row 3.

```
(2c) Change access level code
Current:            New:
Enter the same 4 digit code again
```

Change time of day (3)

Enter the time of day (HHMMSS, 24-hour clock) and push ↵. The result is displayed on row 3.

```
(3) Change time of day
Current: 121629     New:
Enter a new time of day (HHMMSS)
```

Change the date (4)

Enter the date (YYYYMMDD) and push ↵. The result is displayed on row 3.

```
(4) Change the date
Current: 19970101   New:
Enter a new date ...... (YYYYMMDD)
```

Change LED intensity (5)

Enter a new intensity and then push ↵ to change the intensity of the LED's.

```
(5) Change LED intensity
Current: 5          New:
Enter a new value (1..5)
```

Print the system configuration (6)

Push **F1** to print the system configuration. Printing the systems configuration can, needless to say, only be done when there's a printer in the system.

```
(6) Print the systems configuration


  PRINT
```

Test pixels and LEDs (7)

Push **F1** to test LED's and pixels on the control unit.

```
(7) Test pixels and LED's


   TEST
```

Test the local buzzer (8)

Push **F1** to test the local buzzer.

```
 (8) Test the local buzzer


   TEST
```

Check the valves for internal leakage (9)

Push **F1** to check the system (valves and connections) for internal leakage.

```
 (9) Start checking the valves
 Status: ABORTED

   START     STOP
```

General settings - access level 2

Restart the system, save current setup (10)

Push **F1** to restart the sampling sequence. The system will change back to access level 1 and save the current system configuration.

```
(10) Restart the system
   - Save the current setup,
     return to access level 1
  RESTART
```

Restart the system without saving (11)

Push **F1** to restart the sampling sequence. The system will change back to access level 1 but will **NOT** save the current system configuration. All changes to the system configuration will be lost.

```
 (11) Restart system without saving
   - Don't save the current setup,
     return to access level 1
  RESTART
```

Calibrate span on a gas detector (12)

Gas detectors must be calibrated with two different gas concentrations: Zero and a Span gas value determined by the user (the span gas value must be in the area 25-100% off the highest measurement for the gas detector).

Calibration of span is only accepted when dS, in figure 1, is below a certain value depending on the brand and type of gas detector.

Successful calibration of a detector will result in correct presentation of gas values on the control unit.

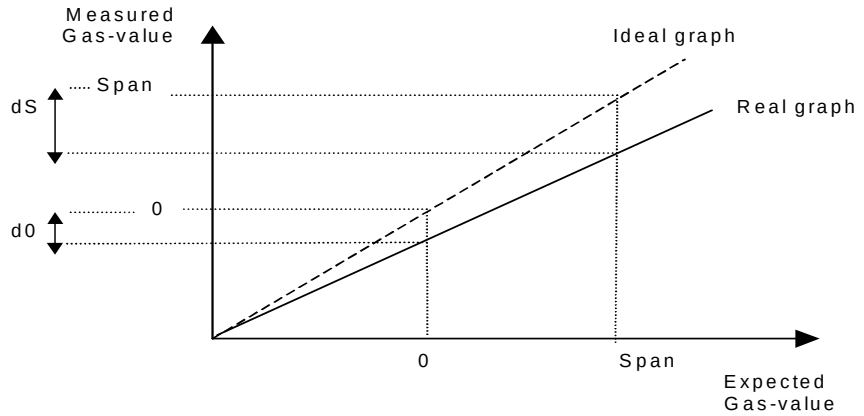

Figure 1: Two-point calibration. “Gas-values” below 0 are interpreted as “negative drift” or as a fault condition.

Select one detector (1-4) to calibrate by entering a numeric input and ↵. Push **F1** to continue.

```
(12a) Calibrate span on a gas detector
Current: (1)CxHy    New:
Enter detector no (1 - no of detectors)
 CONTINUE
```

Enter the concentration of the span-gas. Push **F1** to continue. Note that the procedure for calibrating span for Oxygen will differ.

```
(12b) Calibrate span on a gas detector
Current: 50         New:
Enter test gas value in %LEL
  CONTINUE
```

Open the valve(s) connecting the test-gas bottle to the test-gas tube in the analysing unit. Push **F1** to continue.

```
(12c) Calibrate span on a gas detector

Open test gas valve to start calibration
  START
```

Start the calibration procedure and change to menu 12d by pushing **F1**. The measured gas-value can now be seen on row 2.

Wait until the measured gas-value has stabilised and then calibrate the detector with **F1**.

If calibration fails:

- Check that the test gas bottle is not empty.
- Check the tube to the test gas bottle.
- Calibrate the gas detector manually or exchange any active cells (The procedure depends on the brand and type of gas detector).

Exit menu 12d with **F2.**

```
(12d) Calibrate span on a gas detector
Measured:  49 %LEL CxHy

 CALIBRATE   EXIT
```

Close the test-gas valve(s) and exit with F1.

```
(12e) Calibrate span on a gas detector

Remember to close the test gas valve(s)
   EXIT
```

Adjust zero on a gas detector (13)

Calibration of zero for a gas detector is done with air from the fresh air inlet (except for O2, described separately below).

```
(13a) Adjust zero on a gas detector
Current: (1)CxHy    New:
Enter detector no (1 – no of detectors)
 CONTINUE
```

Select one detector (1-4) to calibrate by entering a numeric input and ↵. Push **F1** to continue.

```
 (13b) Adjust zero on a gas detector
Measured: 1 %LEL CxHy

  ADJUST
```

Calibrate the detector with **F1** when the measured value is stabilised.

If zero calibration fails:

- Make sure the fresh air inlet is not blocked.
- Calibrate the gas detector manually or exchange any active cells (The procedure depends on the brand and type of gas detector).

Exit with **ESC.**

O_2 detector

Calibration of zero on an O_2 detector is done with Nitrogen (N_2) from the test gas bottle.

```
(13a) Adjust zero on a gas detector
Current: (1)CxHy    New:
Enter detector no (1 – no of detectors)
 CONTINUE
```

Select the O2 detector to calibrate by entering a numeric input (1-4) and ↵.
Push **F1** to continue.

```
(13b) Adjust zero on an O2 detector

Open test gas valve to calibrate zero
 CONTINUE
```

Open the valve(s) connecting the test gas tube in the analysing unit. Push **F1** to continue.

```
(13c) Adjust zero on an O2 detector
 Measured: 0.5 Vol% O2

 ADJUST     EXIT
```

Wait until the measured O_2 value has stabilised and then calibrate the detector with **F1**.

If calibration fails:

- Check that the test gas bottle is not empty.
- Check the tube to the test gas bottle.
- Calibrate the gas detector manually or exchange any active cells (The procedure depends on the brand and type of gas detector).

Exit menu 13c with **F2.**

```
 (13d) Adjust zero on an O2 detector

Remember to close test gas valve(s)
 EXIT
```

Close the test gas valve and exit calibration mode with **F1**.

Exit with **ESC.**

Undo calibration on a gas detector (14)

Select one detector (1-4) to undo calibration by entering a numeric input and ↵. Push **F1** to undo calibration of the chosen detector. The previous value is presented on the control unit.

```
(14) Undo calibration on a gas detector
Current: (1)CxHy    New:
Enter detector no (1 - no of detectors)
   UNDO
```

No of groups in the system (15)

Change the current number of groups with a numeric input and ↵**.** A group is a collection of Sampling Points, the groups defined in this menu are configured individually in the Sampling Points Setup, see **3.5.**

```
(15) No of groups in the system
Current: 0          New:
Enter the number of groups (0..8)
```

General settings - access level 3

Change the start-up time (16)

Change the current start-up time with a numeric input and ↵. The start-up time determines how long the SW2020 will wait after power-on before starting the sampling sequence (to allow warm-up of gas detectors).

```
(16) Change the startup time
Current: 10          New:
Enter startup time in seconds
```

Change the alarm delay time (17)

Change the current alarm delay time with a numeric input and ↵. The alarm delay time determines how long the SW2020 waits before measuring after gas from the correct Sampling Point has arrived at the detector(s).

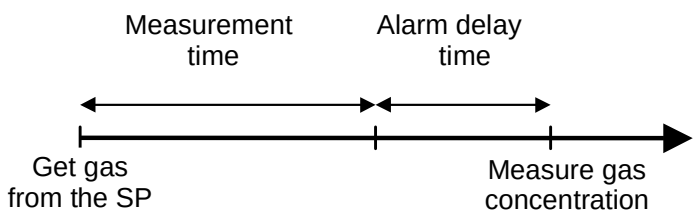

Figure 2: Measurement on a sampling point.

This time should be equal to the reaction time of the **slowest** gas detector in the system

```
(17) Change the alarm delay time
Current: 5           New:
Enter alarm delay time in seconds
```

Same measurement time all SPs (18)

Change the current measurement time for all sampling points with a numeric input and ↵. The measurement time for a Sampling Point is the time it takes for the gas to arrive from the SP to the detector(s). See figure 2

Observe that measurement times for individual measurement points will be lost.

```
(18) Same measurement time all SP's
Current: 11          New:
Enter the measurement time in seconds
```

Same alarm level all SPs (19)

Change the current alarm level for all sampling points. Observe that alarm levels for individual measurement points will be lost.

Choose a gas detector with a numeric input and ↵. Continue with **F1**.

```
(19a) Same alarm level all SP's
Current: (1)CxHy    New:
Enter detector no (1 - no of detectors)
 CONTINUE
```

Choose the alarm level to change (High or Low) with **F2** and ↵. Continue with **F1**.

```
 (19b) Same alarm level all SP's
Current: Lo         New:
Toggle the alarm level with <F2>
 CONTINUE  TOGGLE
```

Enter the new alarm level with a numeric input and ↵. Exit with **F1**.

```
(19c) Same alarm level all SP's
Current: 20         New:
Enter Lo alarm level for det. 1 in %LEL
   DONE
```

Change the sampling sequence (20)

Enter the new sampling sequence length with a numeric input and ↵. Continue with **F1**.

```
(20a) Change the sampling sequence
Current: 24         New:
Enter the sequence length
 CONTINUE
```

Menu 20b is a list where the index in the sampling sequence is chosen with the arrow keys; the current sequence index can be seen on row 3. The sampling point corresponding to a sequence index is changed with a numeric input and ↵. Abort definition of the sampling sequence with **F1** and save the current sequence with **F2**.

```
(20b) Change the sampling sequence
Current: 1          New:
Enter a SP for sequence index no: 1
  ABORT    SAVE SEQ
```

Restart with factory settings (21)

Push **F1** to change back to access level 1 and restart the sampling sequence with the configuration that was defined at the factory.

All custom settings (changes in the configuration after delivery) will be lost.

```
(21) Restart with factory settings
   - WARNING, all custom settings
     will be lost !
  RELOAD
```

3.5 SETUP - SAMPLING POINTS (ACCESS LEVEL 2)

Push **SETUP - Sampling Points** and then use the **Arrow Keys** to choose the sampling point (or group) to configure. Access level 2 is required to enter the Sampling Points Setup.

3.5.1 Configuring a Sampling Point

Use the **Arrow Keys** to select a sampling point.

```
** SAMPLING POINT SETUP 3(6) **
sp3: Water ballast tank 2 STB

   TEXT   ALARM LVL   M.TIME  DET.ON/OFF
```

Push **F1**, **F2**, **F3** or **F4** to configure the chosen Sampling Point.

Change the free text associated with a sampling point (TEXT)

Push **F1** to change the free text.

```
Change free text
Now: Water ballast tank 2 STB

 CONTINUE
```

Push **F1** again to change the free text.

```
Change free text
New: _

  ABORT      SAVE
```

The new text is entered with the alpha - numeric keyboard and the backspace button (←).

Push an alpha - numeric button until you see the desired symbol and then wait for the timer to expire (about one second) to add the symbol to the free text.

The symbols associated with each alpha – numeric button are written on the buttons. Note that upper and lower case letters as well as the numeric itself is available for each button.

Save the new free text with **F2** or return to previous menu without saving with **F1** (or **ESC**).

Change the alarm levels for a detector (ALARM LVL)

Push **F2** to change the alarm level. Choose a detector with a numeric input and ↵. Push **F1** to continue.

```
Sp3: Water ballast tank 2 STB
Current: (1)CxHy    New:
Enter detector no (1 - no of detectors)
 CONTINUE
```

Choose the alarm level to change with **F2** and ↵. Push **F1** to continue.

```
3(6) Water ballast tank 2 STB
Current: Lo         New:
Toggle the alarm level with <F2>
 CONTINUE  TOGGLE
```

Enter a new alarm level with numeric input and ↵. Push **F1** to finish.

```
3(6) Water ballast tank 2 STB
Current: 20         New:
Enter Lo alarm level for det. 1 in %LEL
   DONE
```

Change the measurement time for a sampling point (M.TIME)

Push **F3** to change the measurement time. Enter a new measurement time with numeric input and ↵. Push **ESC** to finish.

The measurement time for a Sampling Point is the time it takes for the gas to arrive from the SP to the detector(s). See figure 2.

```
sp3: Water ballast tank 2 STB
Current: 11         New:
Enter new measurement time in seconds
```

Disconnect a gas detector for a certain SP (DET.ON/OFF)

Push **F4** to disconnect a detector. Choose a detector with a numeric input and ↵. Push **F1** to disconnect the chosen detector for that particular Sampling Point. The detector is reconnected again by pushing **F1** one more time.

```
sp3: Water ballast tank 2 STB
Current: (1)CxHy    New:
Enter detector no (1 - no of detectors)
 DISCONNECT
```

3.5.2 Configuring a Group

If a number of groups are configured in the system (see **3.4.**), they will be present in the Sampling Point List. Use the **Arrow Keys** to select a Group.

```
** GROUP SETUP 3(3) **
grp3: Water ballast tanks STB

   TEXT   DEFINE
```

Push **F1** or **F2** to configure the chosen Group.

Change the free text associated with a group (TEXT)

Push **F1** to change the free text.

```
Change free text
Now: Water ballast tanks STB

 CONTINUE
```

Push **F1** again to change the free text.

```
Change free text
New: _

  ABORT      SAVE
```

The new text is entered with the alpha - numeric keyboard and the backspace button (←).

Push an alpha - numeric button until you see the desired symbol and then wait for the timer to expire (about one second) to add the symbol to the free text.

The symbols associated with each alpha – numeric button are written on the buttons. Note that upper and lower case letters as well as the numeric itself is available for each button.

Save the new free text with **F2** or return to previous menu without saving with **F1** (or **ESC**).

Define Group Members (DEFINE)

Push **F1** to ADD a Sampling Point to the Group. Push **F2** to remove the last Sampling Point from the Group and push **F3** to exit the menu.

```
Define group 3
Sp:1,2,3

  ADD SP  REMOVE LAST   DONE
```

Push **F1** to ADD Sampling Point 4 to the group or enter a new Sampling Point with numeric input and ↵. The **ESC** button will return to the previous menu without adding a new sampling point.

```
Add Sampling Point to Group no 3
Current: 4          New:

    ADD
```

3.6 CONTROL UNIT PANEL

The function of each individual push-button key on the control unit is described below.

Button	**Function**
LIST – SAMPLING POINTS	List all sampling points in the system. Use ↑, ↓, Pg↑ and Pg↓ to choose a sampling point.
LIST – DISCONNECTION'S	List all disconnected sampling points and detectors. Use ↑, ↓, Pg↑ och Pg↓ to choose an entry.
LIST – ALARMS	List all gas alarms in the system. Use ↑, ↓, Pg↑ and Pg↓ to choose an entry.
LIST – FAULTS	List all faults in the system. Use ↑, ↓, Pg↑ och Pg↓ to choose a fault.
SETUP – SAMPLING POINTS	List all sampling points in the system. Use ↑, ↓, Pg↑ and Pg↓ to choose a sampling point. Access level is required to change settings.
SETUP – GENERAL SETTINGS	List all general settings in the system. An access level above 1 is required to change most settings.
F1 ,F2 ,F3, F4	Function keys. Push here to perform an action.
0, 1, 2 – 9	Numeric input buttons
↵ (ENTER)	Used to accept a numeric input
ESC	Go to the previous menu.
HOME	Go to the standby menu.
↑	List the next list entry. The LED is lit when the button is active.
↓	List the previous list entry. The LED is lit when the button is active.
Pg ↑	Display the fifth list item to come (the list must have more then 5entries).
Pg ↓	Display the fifth previous list item.
M – FAULT MUTE	Mute all faults in the system.
F – FAULT RESET	Reset a fault in the fault list.
ALARM MUTE	Mute all gas alarms in the system.
ALARM RESET	Reset the displayed sampling point in alarm.
ALARM IN QUEUE	Display the next gas alarm in the alarm list.

3.7 ACTION DESCRIPTION

Gas Alarm

With reference to the alarm list:

1. When the “Alarm Mute” button is pressed, the acoustic alarm stops and all alarm outputs with mute functionality are deactivated. The scanning cycle continues and will give new alarms for each sampling point exceeding the alarm level. The alarms are stored in the Alarm List and the SP of the last occurred alarm is shown as well as the alarm level “LO” or “HI”.
2. Activation of the “Alarm Reset” button starts a revaluation of the SP in alarm. An “Alarm Reset” request will stop the sampling sequence and make a new measurement. This revaluation is to be able to accept an alarm reset on the SP if the level is now below the alarm level. If You push the “Alarm in Queue” button and make a Reset of all SP’s in alarm, the system will start reevaluating these SP’s one by one. It may therefore take a while to complete alarm reset for several SP’s.

The revaluation sequence can be interrupted by manual measurement or purge. (See the Sampling Point List).

Fault Alarm

With reference to the Fault list:

1. An *Analyse pump, flow failure* is caused by the flow switch FS and stops the pump and scanning sequence if the system does not have the pump redundancy option. The FS is detecting that the pump pressure is too low. The cause is probably a membrane leakage of the pump or a fault of the FS itself. Service is needed if the fault can not be reset.
2. A *Bypass pump, flow failure* is caused by pressure switch PS2. The scanning cycle continues. The bypass pump stops. The cause for this fault is the same as described for the analysing pump.
3. *Analyse Pump or Internal Leakage* is indicated when the automatic leakage control fails. This control is automatically done once per 24 hours by closing all the sampling valves, running the analysing pump and checking that the vacuum switch VS1 is activated. If the VS1 is not activated the cause is a leakage at the vacuum side of the pump from pipes, solenoid valves, pipe couplings or the VS1 itself.
4. *Calibration*. This fault indicates that zero or span calibration is not completed due to a value that is out of range, either due to a gas detector fault or a test gas fault. The bottle might be empty or the test gas mixture is not corresponding to the value that is set for span calibration.

5-8 *Gas Detector 1-4*. Indicates a fault depending on which type of detector that is in use. There might be a loss of power, a dirty mirror in an IR-detector or a sensor failure etc.

9. Moisture fault (option).
10. *Low pressure instrument air fault*. Indicates that the pressure from the pressure regulator is below 2.8 Bar.
11. *Power fault* (Option*)*. As indicated if there are two independent power supplies and one fails.

(Fault Alarm)

12. *Flow fault on SP#*. Indicates a flow fault on the SP listed. Before indication of a flow fault the automatic pipe cleaning function first attempt to remove the cause of the flow fault by flushing the sampling pipe during 15 seconds and then tries to obtain a new sample. If the flow fault still remains the sampling point is automatically disconnected and a flow fault alarm is generated and listed in the fault list. The scanning cycle continues to the next sampling point. As long as the flow fault for a certain sampling point is listed in the fault list the fault remains. To be able to reset the flow fault the cause has to be removed. If a mistake was done concerning a SP in a ballast tank that should normally had been disconnected before ballasting the SP has to be disconnected via “List Sampling Point” Key.
13. *Fuse fault* as indicated. Switch off the main power and change the broken fuse.
14. *Low voltage 5V in the control unit*. Service or exchange of the unit might be necessary.
15. *Repeater unit # no answer*, indicates that there is no contact with the repeater unit indicated. There might be a damage, fuse fault, power loss or a cable brake.
16. *Repeater unit # booted*, indicates that the fault message according to 15 is reset.
17. *Analyzing unit no answer*, indicates that there is no contact with the PCB – RIOK-40. The reason might be a function fault, power fault, fuse fault or a cable brake.
18. *Analyzing unit booted*, indicates that the fault message according to 17 is reset.
19. *No custom set-up*, using factory (as default) set-up, indicates that custom related settings are not done. This normally only occurs the first time the system is started at the workshop.
20. *Flash memory error in control unit* indicates a faulty flash memory. Exchange of the same might be necessary. Consult the service department for assistance.

21-24.
Negative drift, analyzer 1-4 (Abnormal condition). Calibrate the detector.

3.8 THE MINI REPEATER UNIT – MN400

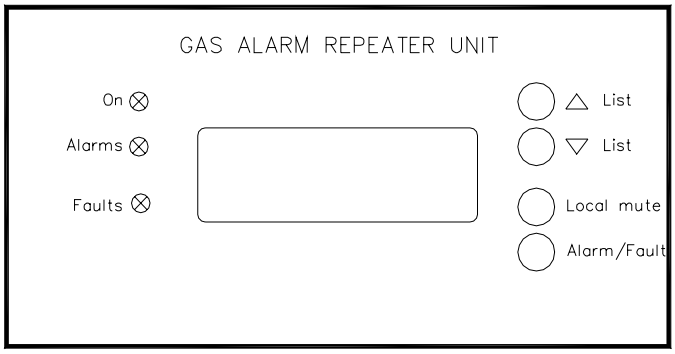

Figure 3: The Mini Repeater - MN400

The Man Machine Interface

- Gas alarms are shown on the Mini Repeater.
  - The previous and next alarms (if any) can be listed with the **Arrow Keys**.
- Faults are shown when there are no unmuted gas alarms in the system
  - The previous and next faults (if any) can be listed with the **Arrow Keys**.
- The clock is shown when there are no alarms or faults in the system.
- The **Local mute** button has dual functions
  – It mutes the local buzzer if there are any entries in the fault or alarm lists
  – It will light the LCD-display, all LED's and sound the buzzer for 15 seconds if there are no entries in the Gas alarm or Fault alarm lists
- The user can access the fault list with the **Alarm/Fault** button if the MN400 is presently showing the Gas Alarm List. The MN400 will return to the Alarm list after 15 seconds if no buttons are touched.

LEDs

- The **ON** LED – Is lit when the MN400 is running
- The **ALARM** LED – Is lit when there is a Gas Alarm in the system
- The **FAULT** LED – Is lit when there is a Fault Alarm in the system

4.TECHNICAL DATA

4.1 INTERNAL CONNECTION

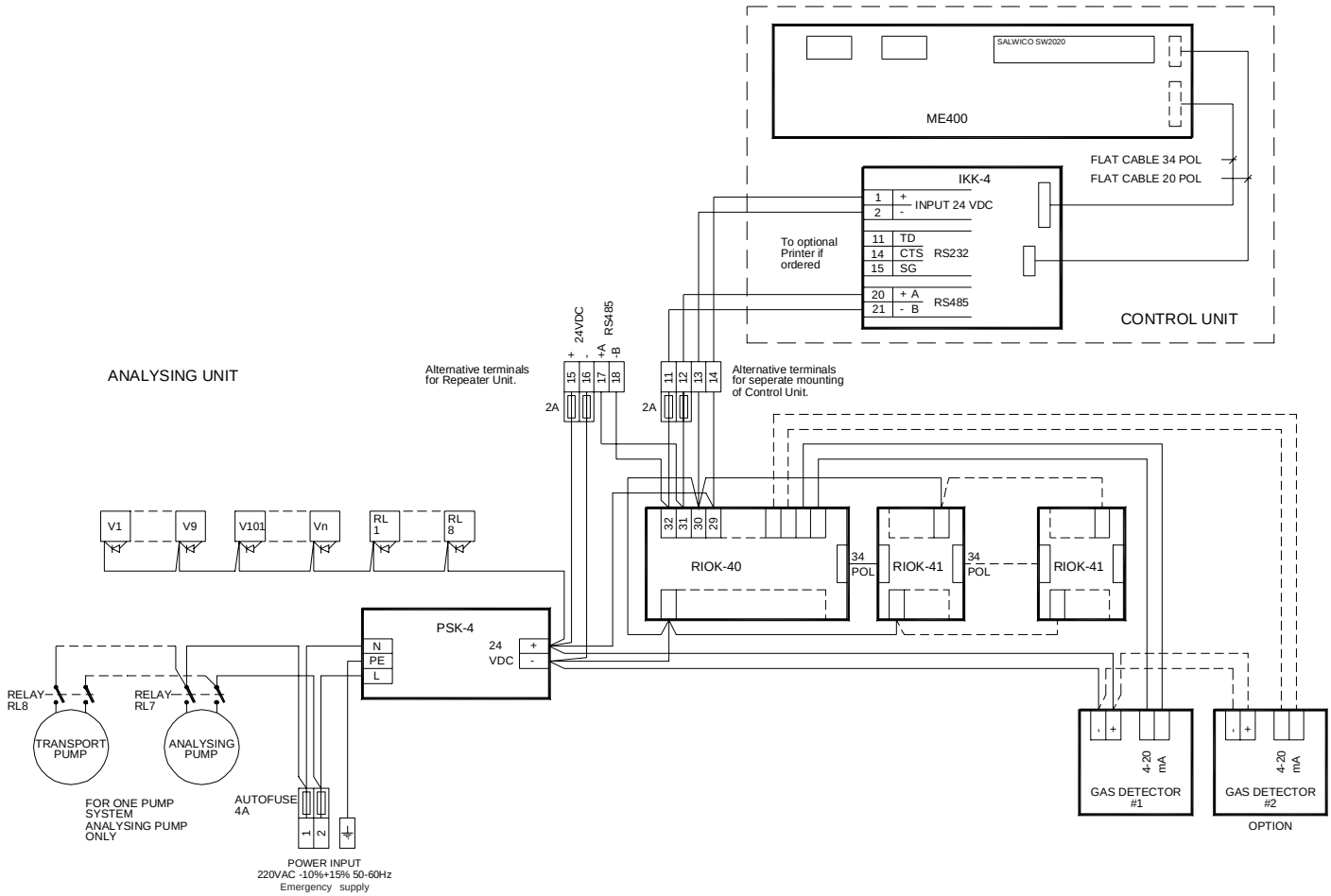

4.2 INTERNAL CONNECTIONS ON RIOK-40 AND RIOK-41

Analogue inputs on RIOK-40

Input	Terminal	Pos	Description	
AN1	19-20		Gas Detector 1	
AN2	21-22		Detector 2	(option)
AN3	23-24		Detector 3	(option)
AN4	25-26		Detector 4	(option)

Digital inputs on RIOK-40

Input	Terminal	Pos	Description	
0	1-2	PS 1	Fault Analysing Pump	
1	3-4	PS2	Fault Transport Pump	(option)
3	5-6	VS1	Fault Analysing Flow	
4	7-8	VS2	Fault Transport Flow	(option)
5	9-10		Fault Gas Detector	(option)
6	11-12		Fault Moisture (option)	
7	13-14		Fault instrument air low pressure	(option)
8	15-16		Fault Power	(option)

Digital outputs from RIOK-40

Output	Terminal	Pos	Description
0	35	RL1	Fault alarm with mute function
1	37	RL2	Fault alarm
2	39	RL3	Gas alarm Low level with mute function
3	41	RL4	Gas alarm Low level
4	43	RL5	Gas alarm High level with mute function
5	45	RL6	Gas alarm High level
6	47	V1	Soleniod valve
7	49	V2	Soleniod valve
8	51	V3	Soleniod valve
		alt. V8	Soleniod valve. Pump redundance. (option)
9	53	V4	Soleniod valve
10	55	V5	Soleniod valve
11	57	V6	Soleniod valve for Two pump system
12	59	V7	Soleniod valve for Two pump system
13	61	V9	Soleniod valve. Water trap drainage (option)
14	63	RL7	Controller Relay for Analysing Pump
15	65	RL8	Controller Relay for Transport Pump (option)

Outputs on RIOK-41´s

Output	Terminal	Position	Description
16	2	V101	Solenoid Valve Sampling Point 1
17	4	V102	Solenoid Valve Sampling Point 2
18	6	V103	Solenoid Valve Sampling Point 3
19	8	V104	Solenoid Valve Sampling Point 4
20	10	V105	Solenoid Valve Sampling Point 5
21	12	V106	Solenoid Valve Sampling Point 6
22	14	V107	Solenoid Valve Sampling Point 7
23	16	V108	Solenoid Valve Sampling Point 8
24	2	V109	Solenoid Valve Sampling Point 9
25	4	V110	Solenoid Valve Sampling Point 10
.		.	
.		.	
.		.	
n		Vn	Solenoid Valve Sampling Point n

4.3 Pneumatic diagram, Analysing unit

4.3.1 One pump system

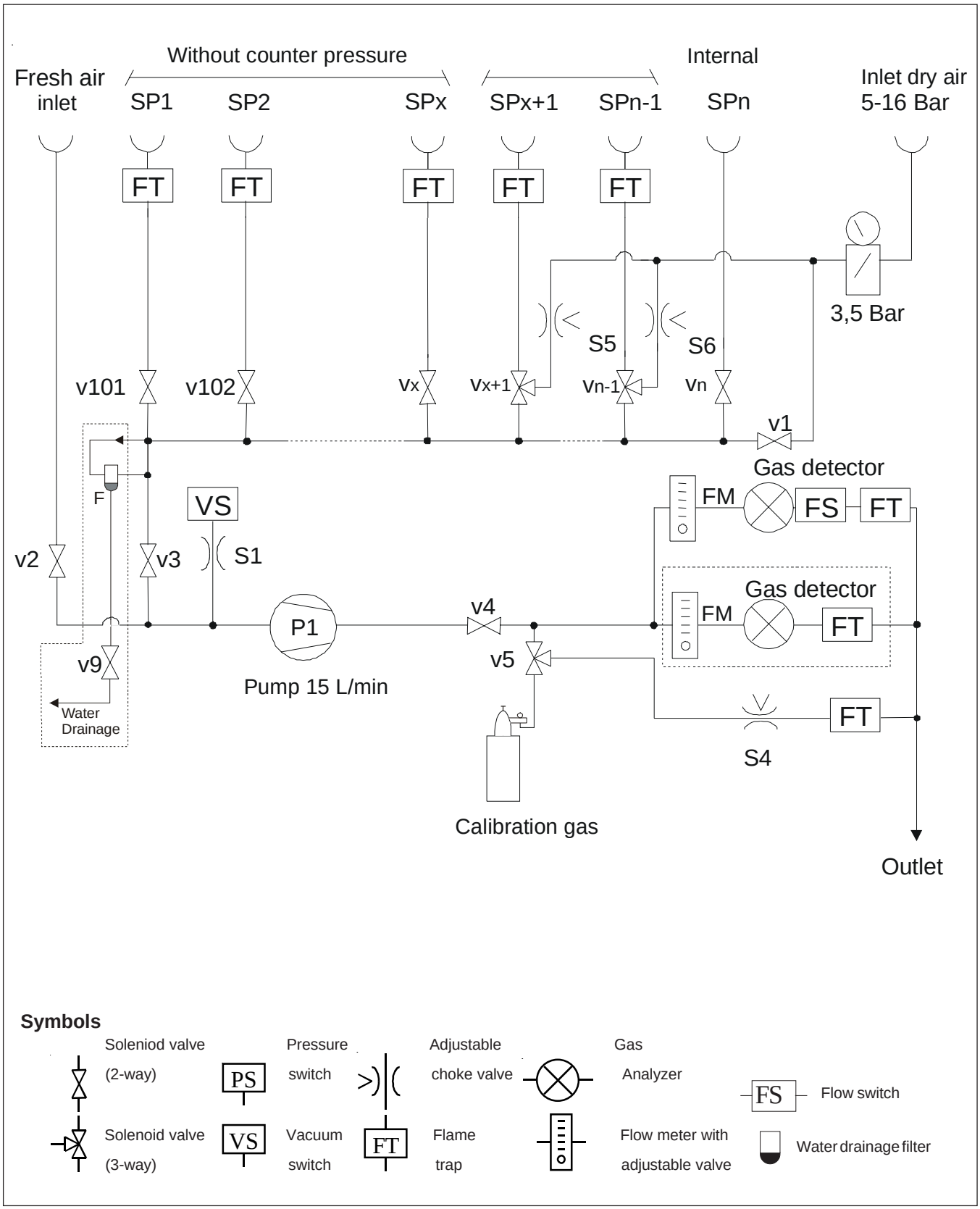

4.3.2 Two pump system

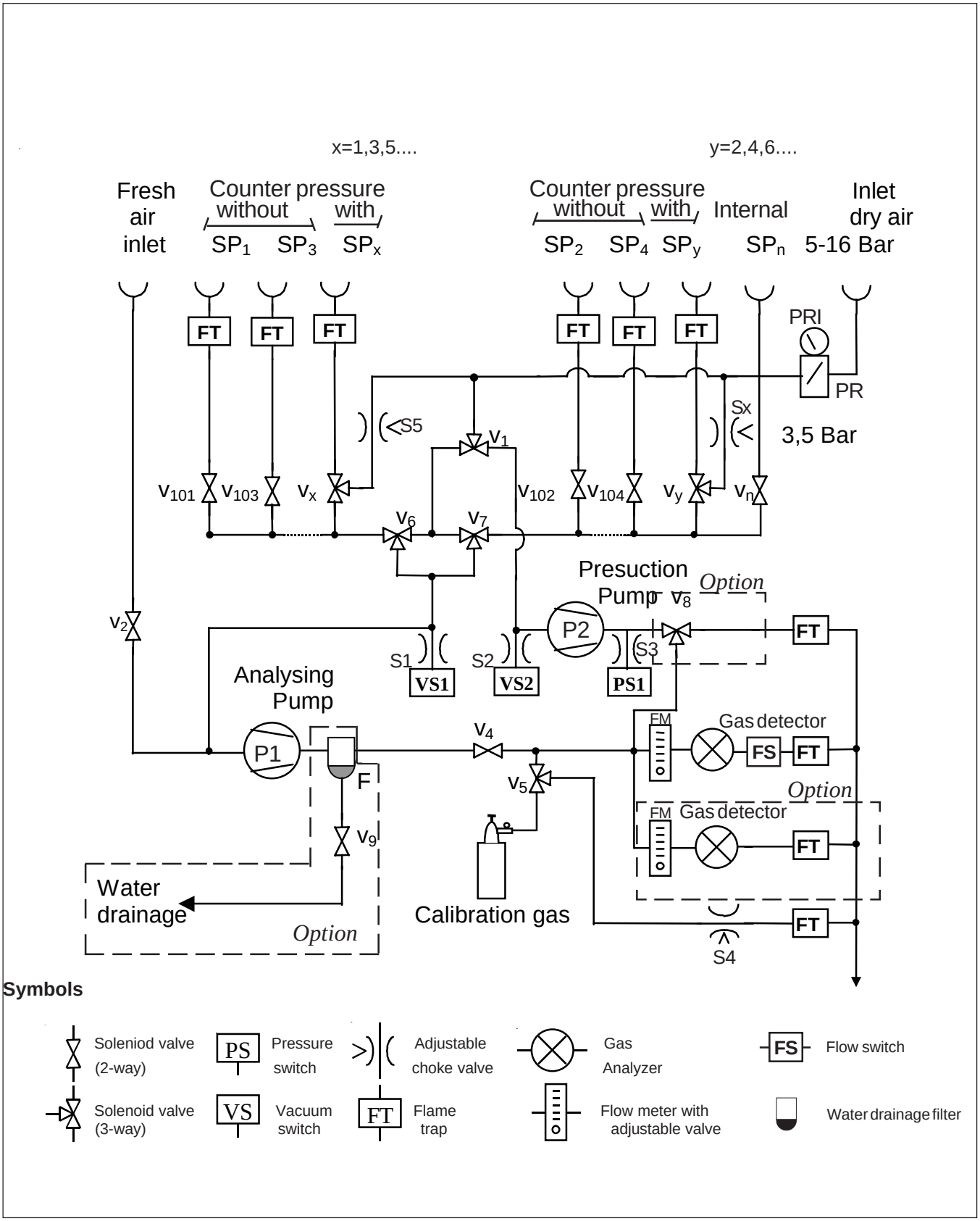

4.4 Flow examples

4.4.1 One pump system

Normal operation, sampling and analysing of sampling point no 2 (SP2)

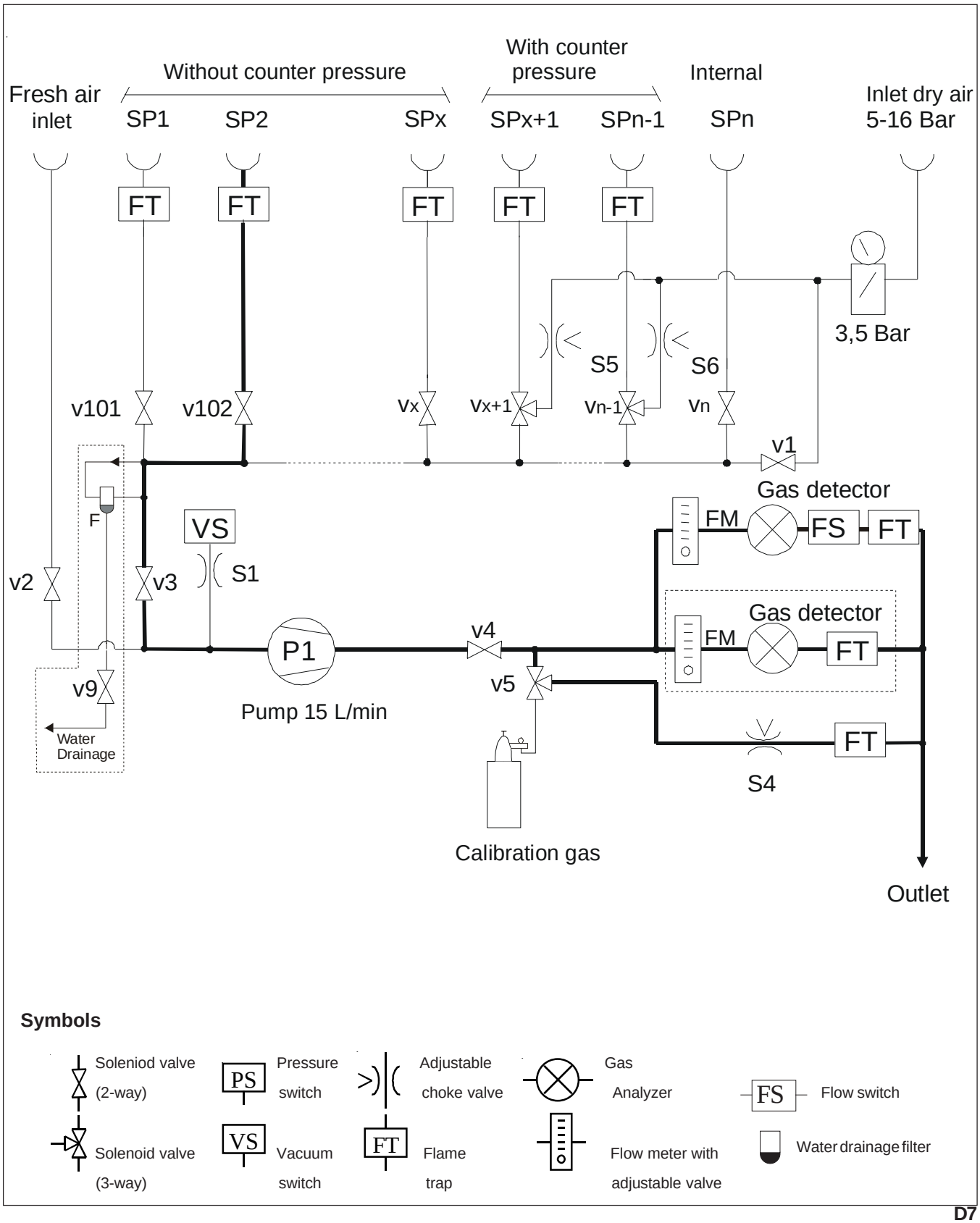

4.4.2 One pump system

Pipe cleaning function on sampling point no 2 (SP2). Pump connected to fresh air inlet.

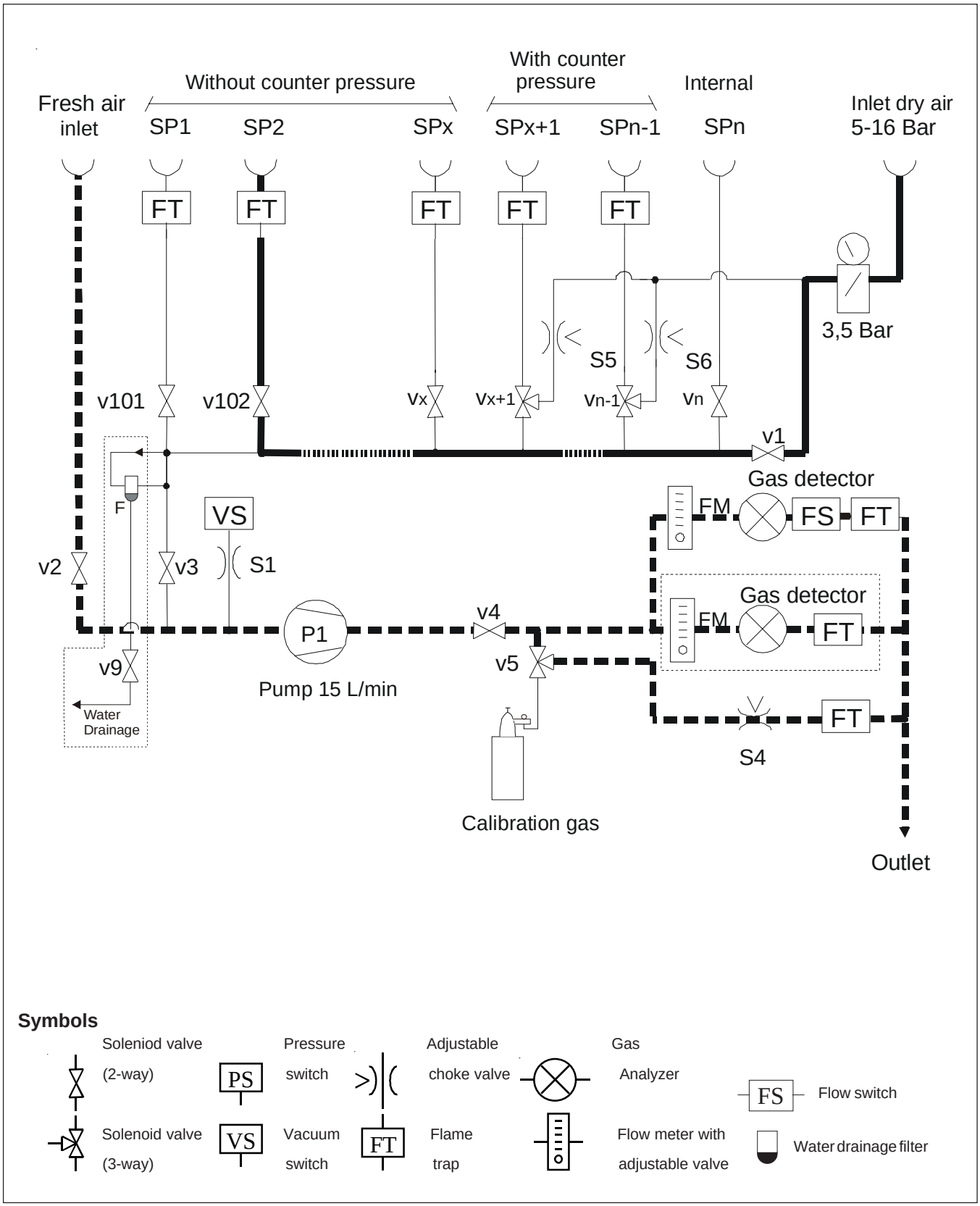

4.4.3 One pump system
Draining of water drainage filter. Pump connected to fresh air inlet.

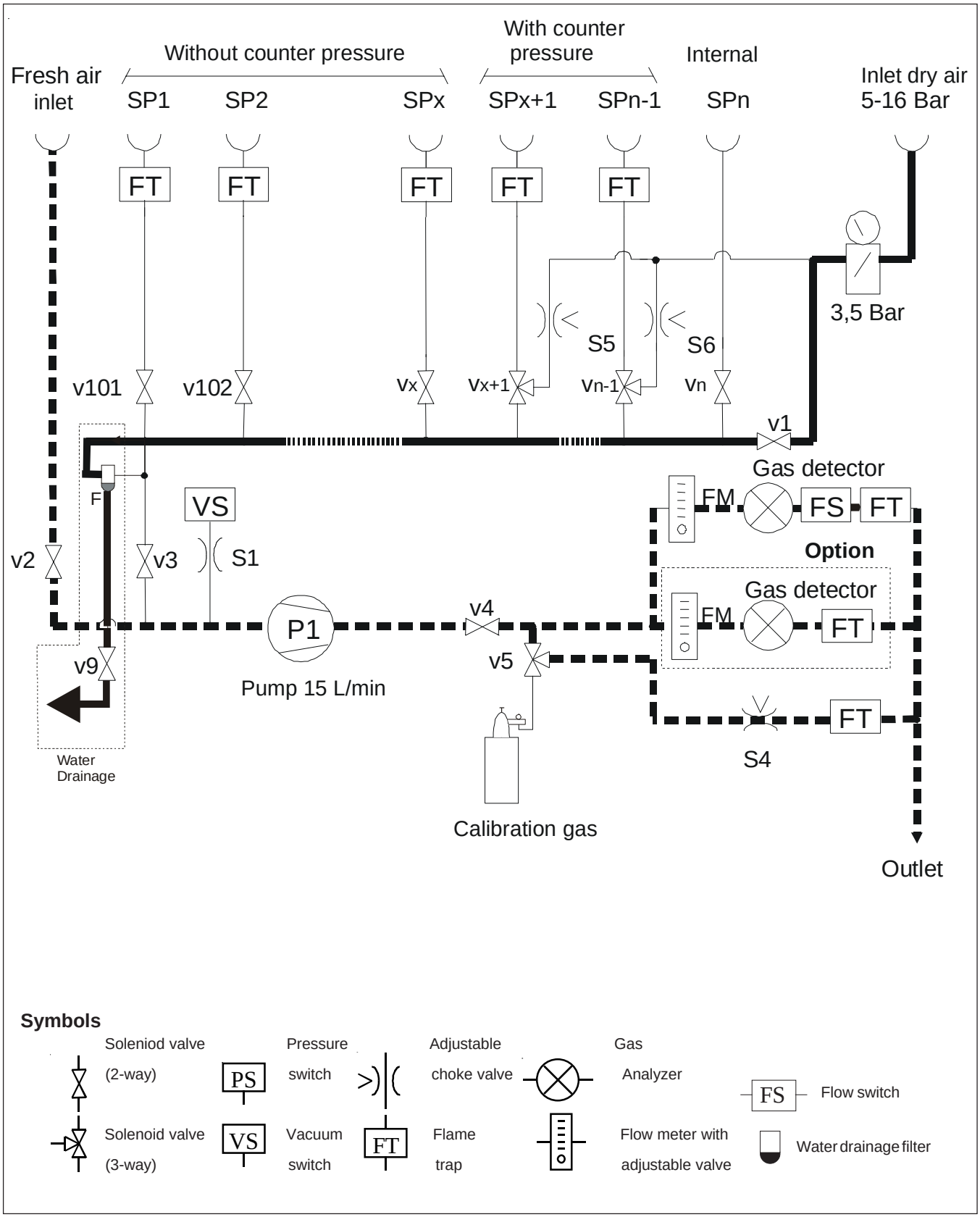

4.4.4 One pump system
Calibration with test gas.

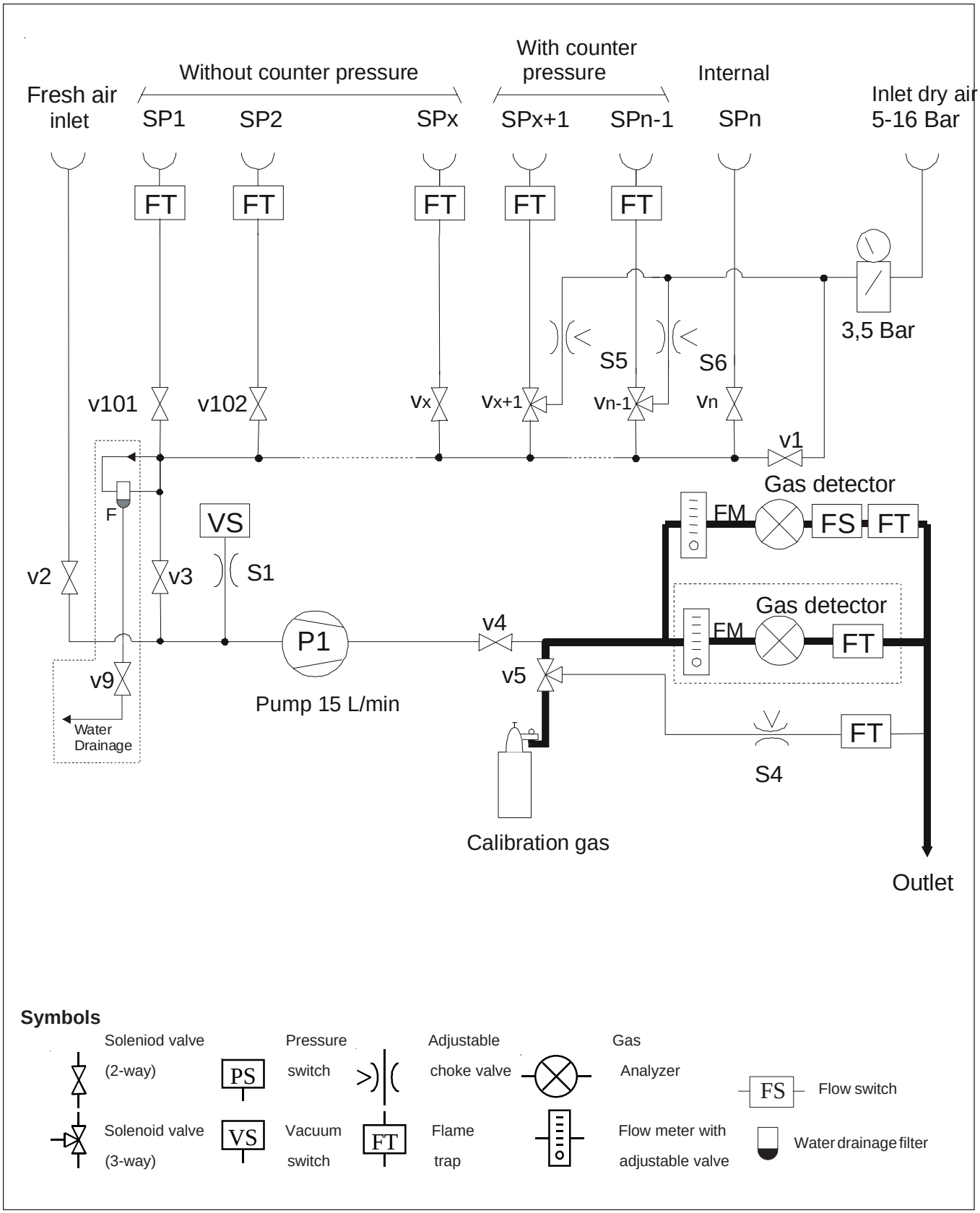

4.4.5 Two pump system

Sampling and analysing of sampling point no 1 (SP1) and presuction of SP2.

Analysing

Presuction

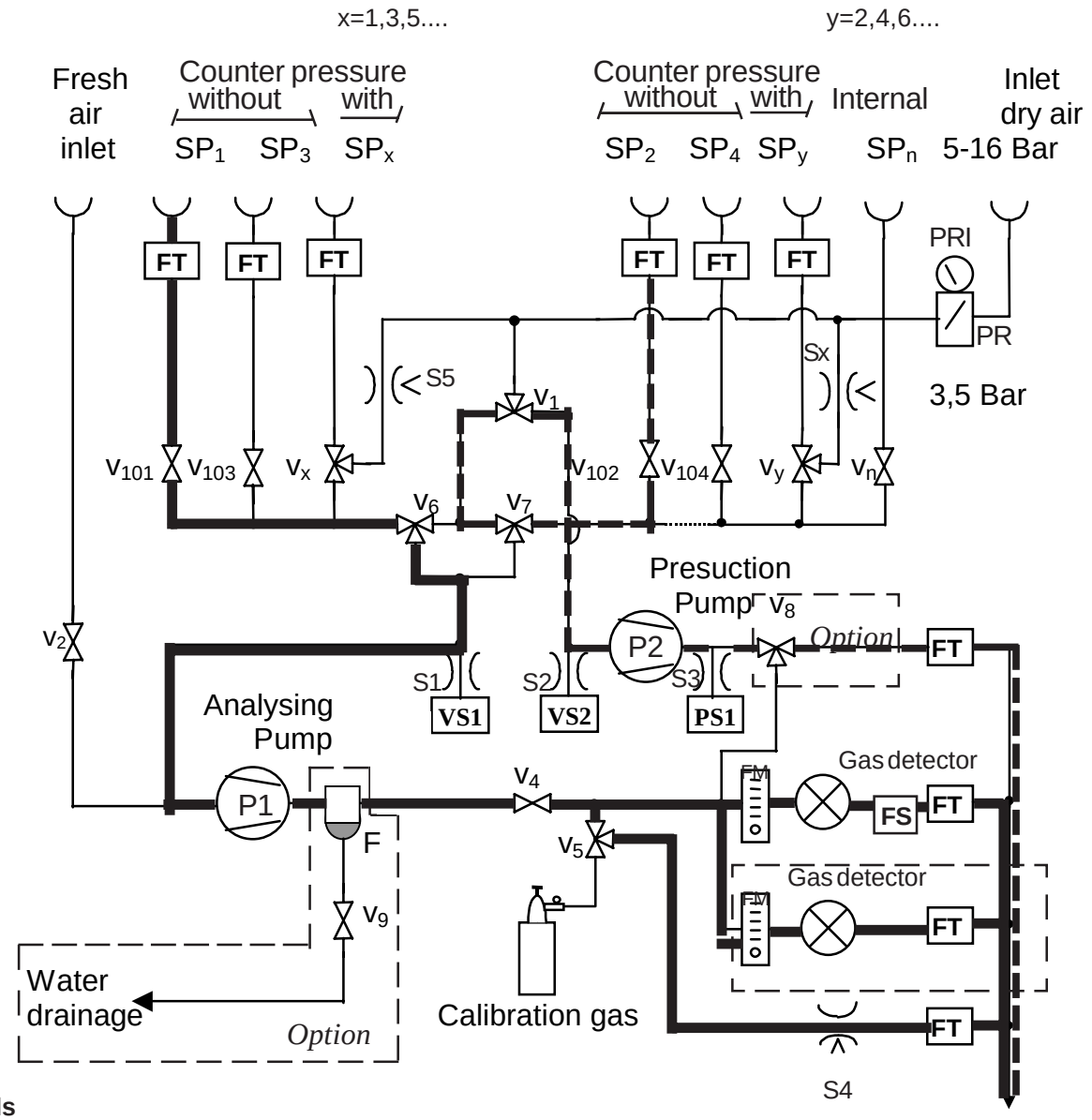

Symbols

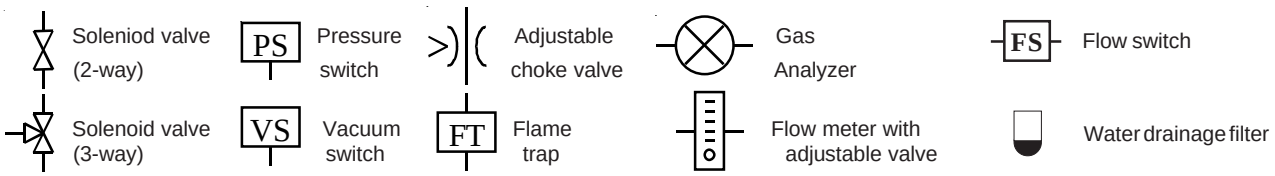

4.4.6 Two pump system

Pipe cleaning of sampling point no 2 (SP2) and analysing of sampling point no 1 (SP1).

Analysing

Presuction

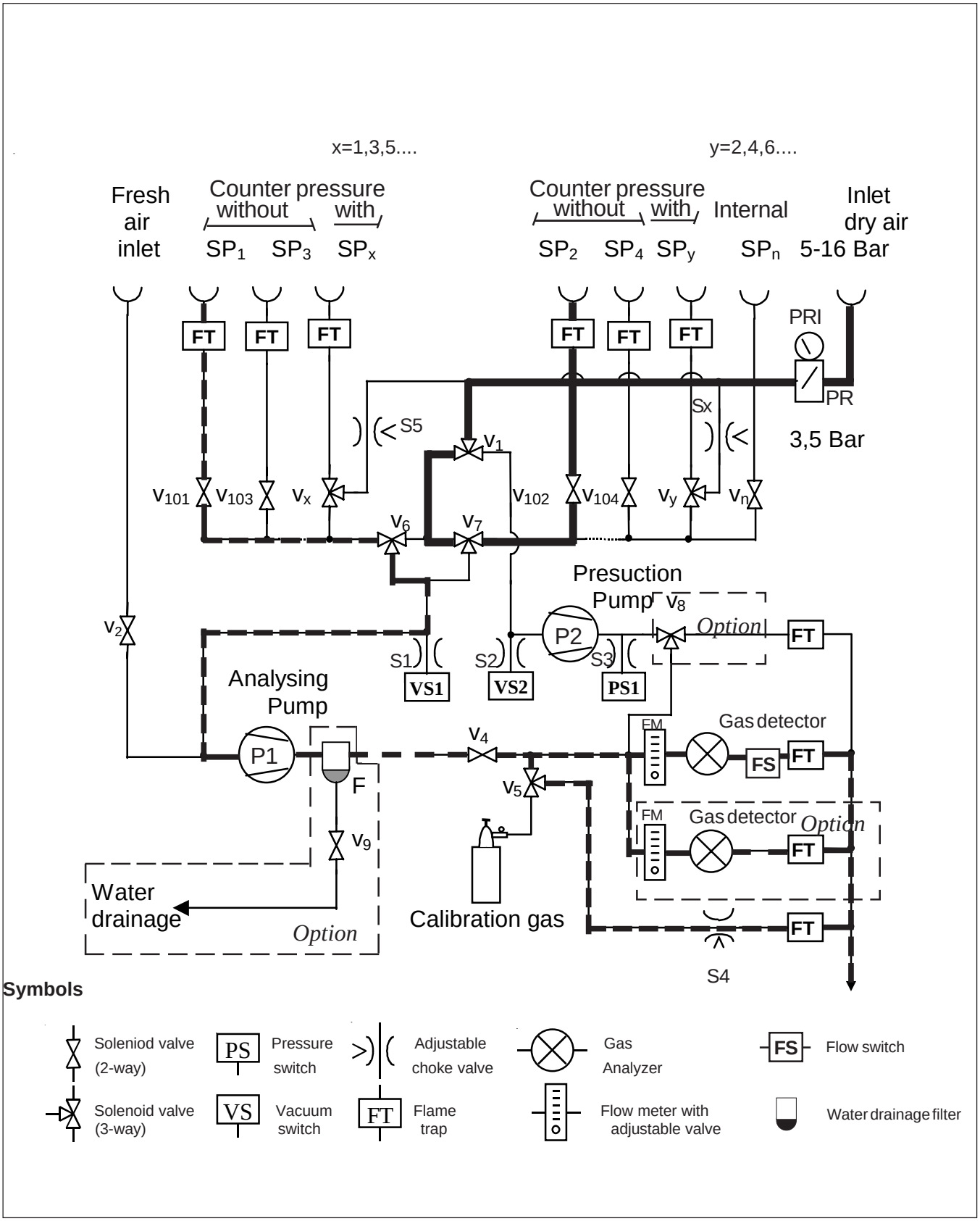

4.4.7 Two pump system

Draining of water drainage filter and presuction of sampling point no 2 (SP2).

Draining

Presuction

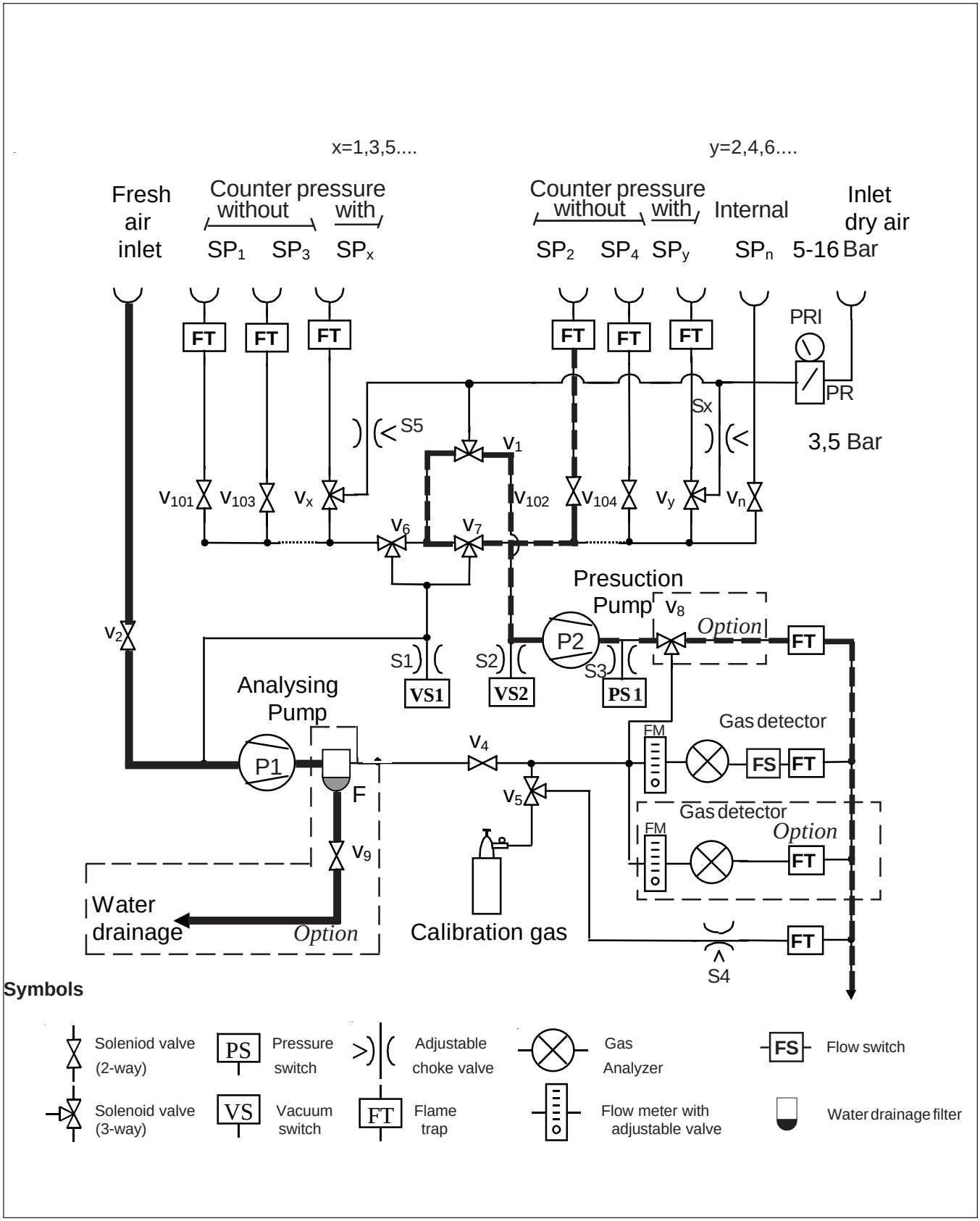

4.4.8 Two pump system

Calibration with test gas and presuction of sampling point no 2 (SP2).

Calibration

Presuction

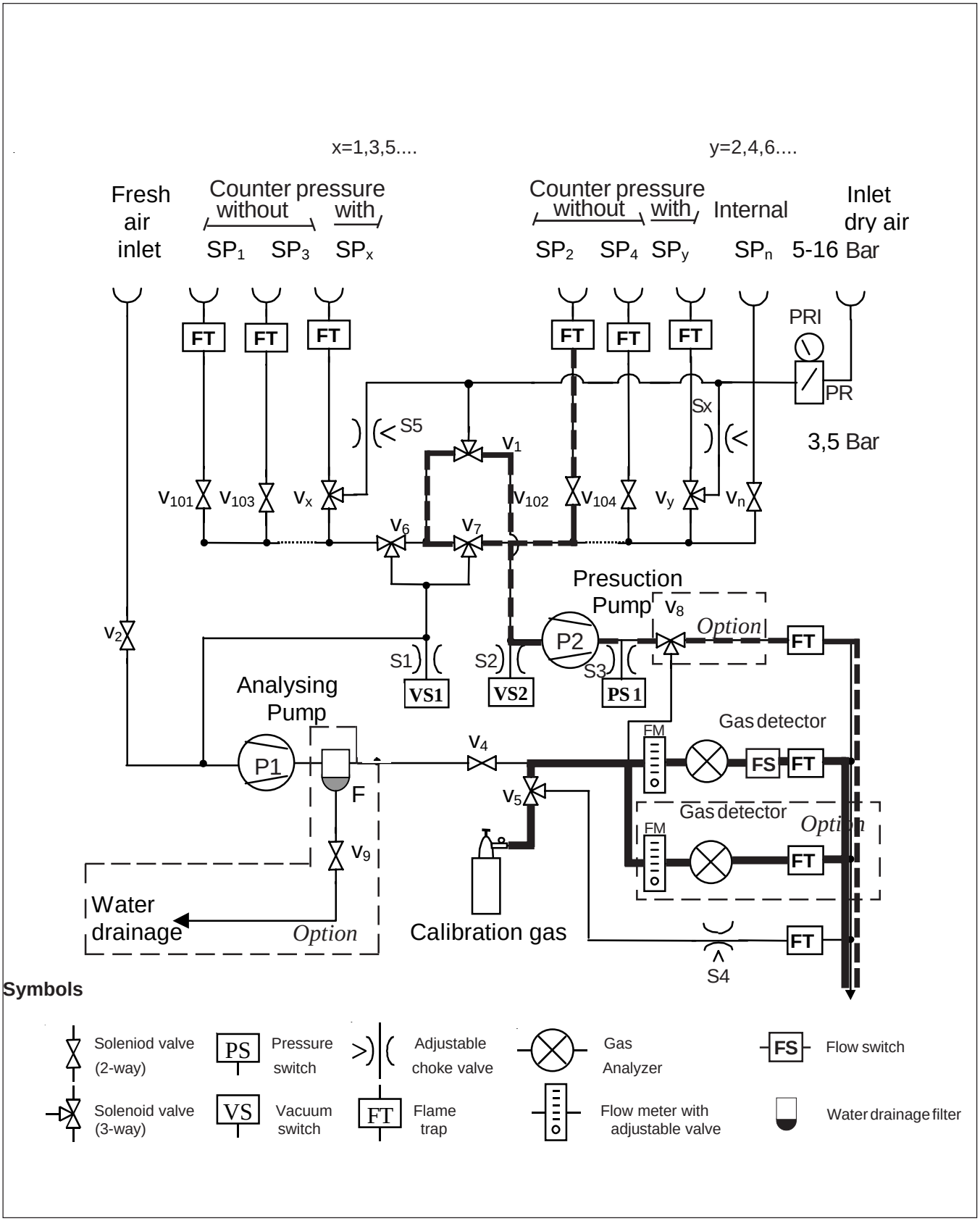

4.4.9 Two pump system

Calibration of zero with fresh air and presuction of sampling point no 2 (SP2).

Zero calibration

Presuction

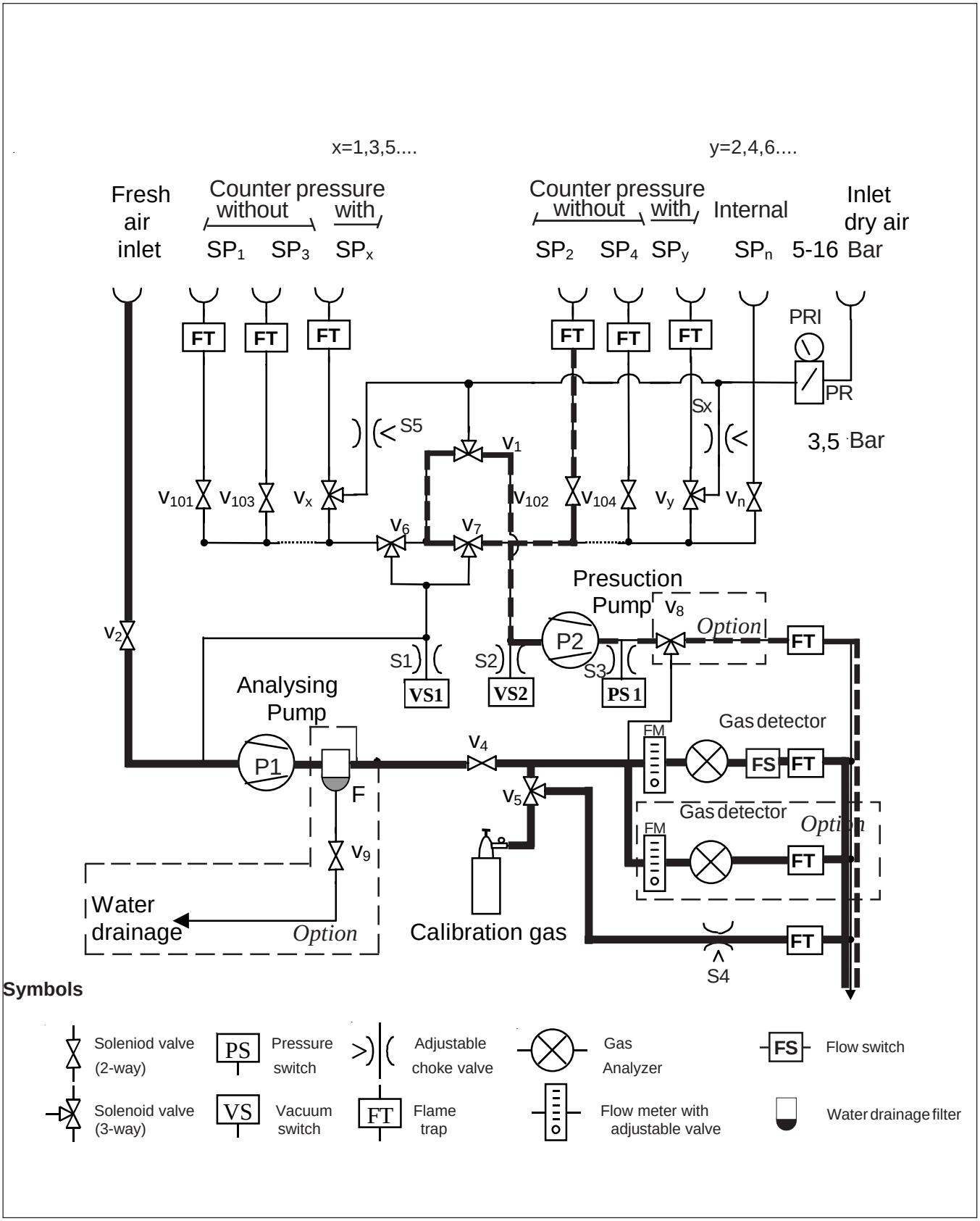

4.4.10 Two pump system
Pump redundance function (when analysing pump has failed).
Sampling and analysing of sampling point no 1 (SP1).

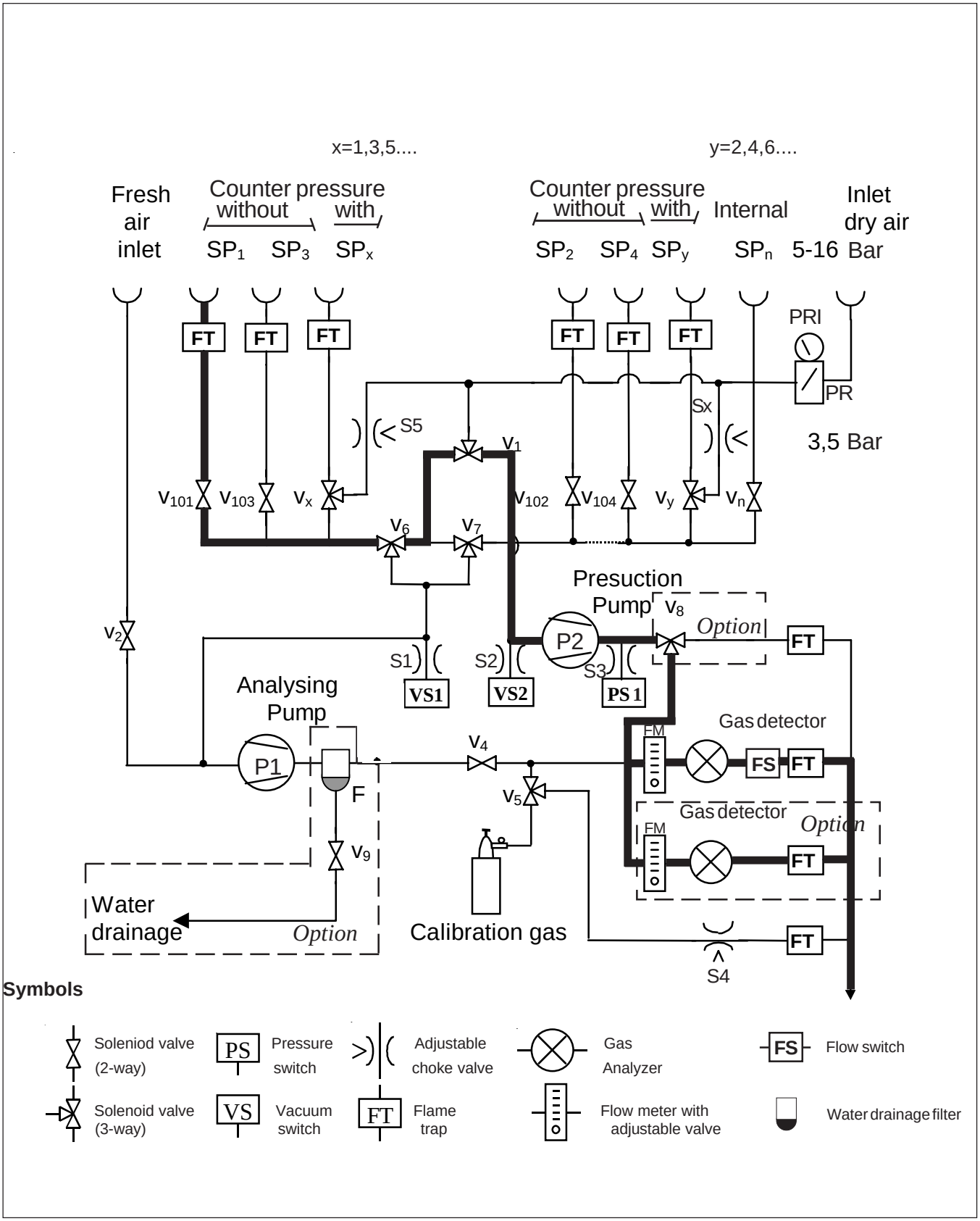

4.5 CALCULATION OF SAMPLING TIME

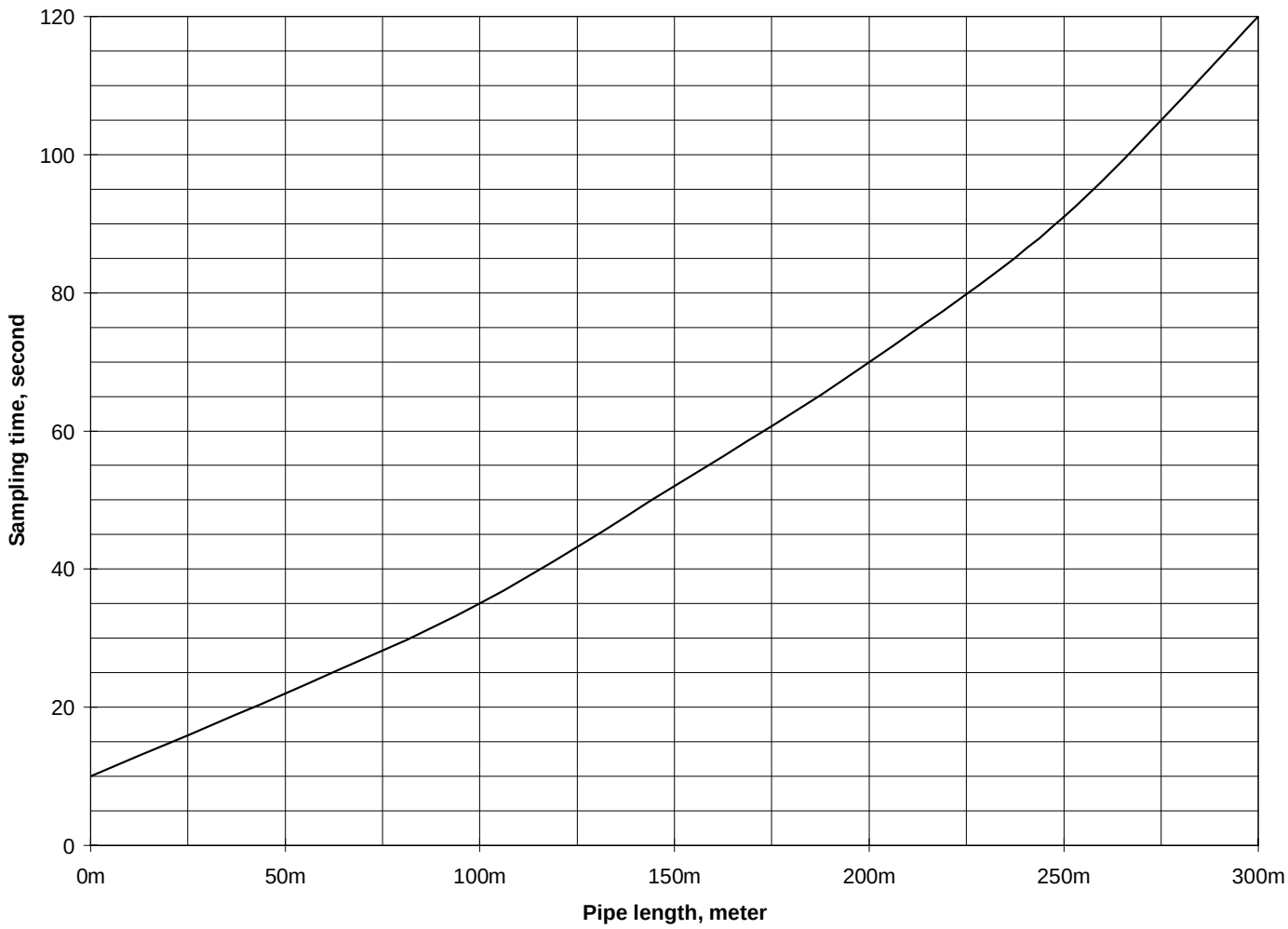

Sampling pipe length, m	0	25	50	75	100	125	150	175	200	225	250	275	300
Sampling time, sec	10	15	22	28	35	43	52	61	70	80	91	105	120

Diagram for calculation of the optimal sampling time corresponding to the sampling point length. The pump capacity is 15 L/min and the sampling pipe inner diameter is 6 mm. For a SW2020-system with two pumps the sum of presuction and analysing time is the total sampling time to insert in the setup for the sampling points.

4.6 Vacuum pump

THOMAS® COMPRESSORS & VACUUM PUMPS
1419 ILLINOIS AVE., SHEBOYGAN, WI 53082
(414) 457-4891

MODEL NUMBERS:
107CA 107CAB 107CB 107CC 107CD 107BA 107BD 107CCD

Read and understand the following information and instructions included with this product before using. This information is for your safety and to prevent damage to this product.

CAUTION: To reduce risk of electrical shock . . .

1. Do not disassemble. Disassembly or attempted repairs if accomplished incorrectly can create electrical shock hazard. Refer servicing to qualified service agencies only.
2. If this plug is supplied with a three pronged plug, connect unit to a properly grounded outlet only.

WARNING: To reduce risk of electrocution . . .

1. This product should never be left unattended when plugged in.
2. Always unplug this product immediately after using and store in dry place.
3. Do not use this product in or near area where it can fall or be pulled into water or other liquids.
4. Do not reach for this product if it has fallen into liquid. Unplug immediately.
5. Never operate this product outdoors in the rain or in a wet area.

DANGER: To reduce risk of explosion or fire . . .

1. Do not use this product in or near explosive atmospheres or where aerosol (spray) products are being used.
2. Do not pump anything other than atmospheric air.
3. Do not pump combustible liquids or vapors with this product or use in or near an area where flammable or explosive liquids or vapors may exist.
4. Do not use this product near flames.

CAUTION: To prevent injury . . .

1. Close supervision is necessary when this product is used near children or invalids. Never allow children to operate the unit.
2. Never operate this product if it has a damaged cord or plug. If it is not working properly. If it has been dropped or damaged. Or if it has fallen into water, return the product to a service center for examination and repair.
3. Keep the cord away from heated surfaces.
4. Never block any air openings (inlet) of this product or place it on a soft surface where the openings may be blocked. Keep all air openings free of lint, dirt and other foreign objects.
5. Never use while sleeping or drowsy.
6. Never drop or insert fingers or any other object into any openings.
7. Do not operate this product where oxygen is being administered.
8. This unit may be thermally protected and can automatically restart when the protector resets. Always disconnect power source before servicing.
9. Wear safety glasses or goggles when operating this product.
10. Use only in well ventilated areas.
11. Do not use any tools or attachments without first determining maximum air pressure for that tool or attachment.
12. Never point any air nozzle or air sprayer toward another person or any part of the body.
13. All electrical products generate heat. To avoid serious burns never touch unit during or immediately after operation.

Failure to observe the above safety precautions could result in severe bodily injury, including death in extreme cases.

SAVE THESE INSTRUCTIONS

Warning: Thomas compressors are precision-made, and carefully assembled and wired. Therefore do not disassemble or attempt to repair these products. Only qualified personnel should perform repair service.

IMPORTANT NOTICE TO PURCHASER: WARRANTY AND EXCLUSIVE REMEDIES

Thomas finished OEM products, when properly installed and under normal conditions of use, are warranted by Thomas to be free from defects in material and workmanship at time of shipment. Warranty claims regarding OEM limited products must be asserted within 13 months (the "warranty period") from date of manufacture encoded on the product (unless otherwise agreed in writing or specified in a Thomas OEM Quotation). The customer's exclusive remedy against Thomas for a warranty claim or otherwise, shall be limited to repair or replacement of the subject OEM finished product if it is shown to have been defective in material and workmanship at time of shipment, and then only if the claim is asserted during the warranty period. Thomas maximum liability under this exclusive remedy shall never exceed the cost of the subject product and Thomas reserves the right, at its sole discretion, to refund the purchase price in lieu of repair or replacement. Except for such warranty and exclusive remedy as stated (and except for the express warranty of title) THOMAS DISCLAIMS ALL OTHER WARRANTIES WITH RESPECT TO ITS OEM FINISHED PRODUCTS, WHETHER IMPLIED, AND SPECIFICALLY DISCLAIMS THE IMPLIED WARRANTIES OF MERCHANTABILITY AND FITNESS FOR A PARTICULAR PURPOSE. IN NO EVENT SHALL THOMAS BE LIABLE TO CUSTOMER OR THIRD PARTIES IN WARRANTY, CONTRACT, NEGLIGENCE, STRICT LIABILITY, OR OTHERWISE, FOR ANY DAMAGES, WHETHER INCIDENTAL OR CONSEQUENTIAL, WHICH ARE ALLEGED TO HAVE BEEN CAUSED BY ONE OR MORE OF OUR PRODUCTS BEYOND THE COST TO THE CUSTOMER OF THE SUBJECT PRODUCT OR PRODUCTS. THE EXCLUSIVE REMEDY FOR ANY CLAIM HAVING BEEN LIMITED TO REPAIR OR REPLACEMENT AS AFORESAID.

Because Thomas OEM warranties and remedies extend only to our direct customers, the customer is not authorized to extend warranties on our behalf to anyone. Unauthorized extensions of warranties by the customer shall remain customer's responsibility.

CUSTOMER IS RESPONSIBLE FOR DETERMINING THE SUITABILITY OF OUR PRODUCTS FOR CUSTOMER'S USE OR RESALE, OR FOR INCORPORATING THEM INTO OBJECTS OR FOR APPLICATIONS WHICH CUSTOMER DESIGNS, ASSEMBLES, CONSTRUCTS OR MANUFACTURES.

Part No. 634962 Rev. X 8/96

©1993 Thomas Industries Inc. Printed in U.S.A.
All Rights Reserved

DRAWING AND PARTS LIST

Item No.	Part No.	Component No.	Description	Qty.
1	607180		Connecting Rod Assembly	1
2		607139	Connecting Rod	1
3		608148	Diaphragm	1
4		625540	Screw - Hold Down Plate	4
5		654649	Diaphragm Hold Down Plate	1
6	614425-504		Motor End Cap Assembly	1
7	614609		Vented Cover - Front & Rear	2
8	615403		Spacer - Eccentric	1
9	624444-504		Adapter Ring	2
10	625114		Connecting Rod Screw	1
12	625266		Front Cover Screw	8
13	625444		Head Screw	4
14	633544		Fan - CW Natural	1
15	633545		Fan - CCW Gray	1
16	See Chart		Eccentric & Bearing Assembly	1
17		625244	Eccentric Set Screw	1
18	660873-504		Head & Valve Plate Assembly	1
19		617045	Valve Keeper Strip	2
20		621102	Valve Flapper	2
21		625160	Valve Flapper Screw	2
22		625606	Screw - Valve Plate	4
23		633439	Valve Plate Gasket	1
24		654129	Valve Plate	1
25		660131-504	Head	1
26	641034		Filter - Foam	1
27	660763		Filter Body	1
28	660767		Filter Cap	1
29	633267		Bushing (Not Shown)	1
N.S.	633584		Cord Assembly	1

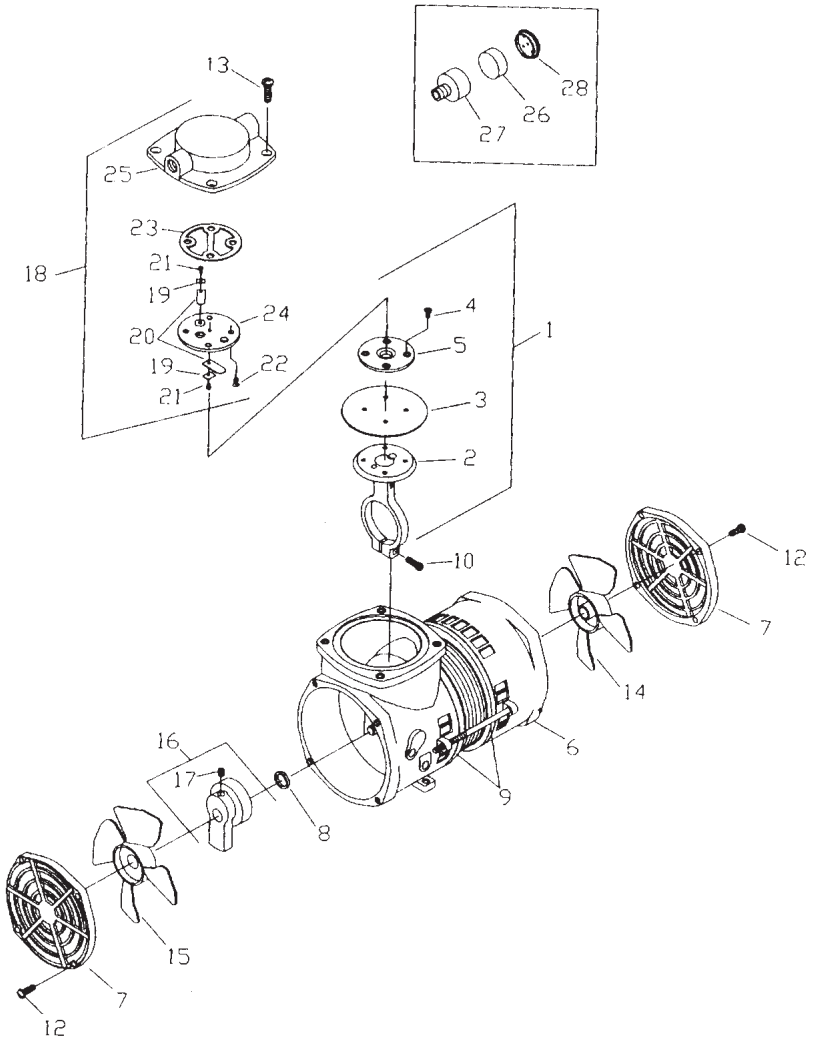

Model No.	Stator No.	Voltage
107CA	608102	115/60
107CD	608107	230/50
107CB	608152	115/50
107CC	608129	230/60
107BD	608107	230/50
107BA	608102	115/60
107CCD	608865	230/50
107CAB	608118	115/60

Eccentric Assembly No.	Eccentric No.	Bearing No.	Stroke
645684	645410	646069	.050
645599	645354	646069	.110
645298	645214	646069	.140
645372	645215	646069	.160
645373	645216	646069	.180
645374	645217	646069	.200

107BA				107BD			
Delete	Item No.	Part	Add	Delete	Item No.	Part	Add
607139	1	Connecting Rod	607142	607139	1	Connecting Rod	607142
	N.S.	Hose Connector	607019		N.S.	Hose Connector	607019
	N.S.	Nut-Hose	626455		N.S.	Nut - Hose	626455
	N.S.	Felt	641020		N.S.	Felt	641020

4.6 Gas detectors

4.6.1 Simrad GD10 IR Gas Detector

4.6.1.1 Data sheet

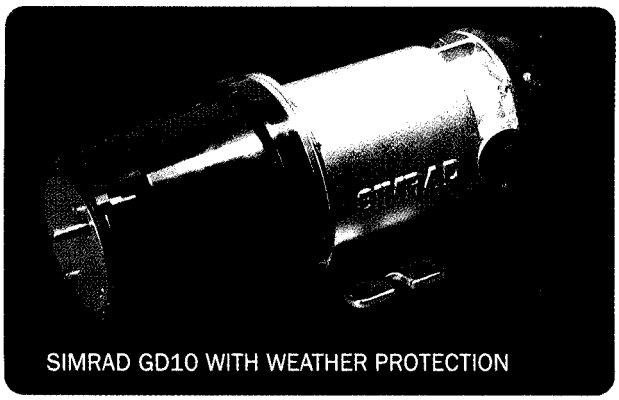
SIMRAD GD10 WITH WEATHER PROTECTION

Main features include:

Increased reliability and long-term stability

The all solid-state electronic design results in improved reliability, long term stability and accuracy.

The infrared source is electronically chopped eliminating the need for moving parts.

As the source is a solid-state silicon based component and not a filament lamp, replacement or calibration will not be necessary during sensor lifetime.

The IR source has a much higher resistance to vibration and shock than the filament in a filament lamp.

Automatic self test

The detector provides automatic self test of its sensing and calibration functions. Malfunction warnings are provided.

Fail-safe operation

Unlike most gas detectors in use today, the GD10 will give an error signal and not cause gas alarm in case of detector failure.

Faults in electronics, optical parts or contamination of optics will cause fault signals which are presented at the output.

Poison-proof operation

Conventional catalytic gas detectors suffer from reduced sensitivity and zero point drift due to poisoning by silicone vapours, hydrogen sulphide (H_2S) and other agents widely used offshore. These problems are eliminated with a gas detector based on IR-absorption.

No saturation effects

High gas concentrations will not saturate the detector, as opposed to conventional catalytic and semiconductor detectors.

Reliable readings even when highly contaminated

All vital functions are maintained even with 70% reduction in transmittance caused by accumulation of dirt on IR windows. Warning of window contamination is provided ("clean optics").

The mirror is heated to prevent formation of moisture and ice.

Functional in inert gas atmosphere

The GD10 can be used to detect gases where oxygen is not present such as subsea production units.

Housing

The GD10 contains both an explosion-proof EExd compartment made of stainless steel and an EExe terminal compartment. The EExe compartment eliminates the added cost of a special cable termination.

The external optical surfaces are made of sapphire which withstands high-pressure water and abrasive cleaning.

The GD10 can be easily cleaned and is resistant to humid and corrosive environments.

Simple retrofit ability

The GD10 has been designed to be interchangeable with catalytic detectors using the existing cabling and a separate bridge interface.

Gas sampling

For applications where it is required to perform periodic checks of the gas monitoring system, a version of the GD10 has a small gas cell in the detection path. This cell permits functional checks by using only a small volume of gas.

A sample flow housing for aspirator system applications is available.

Other gases: The GD10 is available for a wide range of different gases and concentrations.

Cost effective solution

A gas monitoring system equipped with GD10 Gas Detectors saves operational costs as it requires no regular field maintenance.

The gas detector is simple to install and operate.

GD10 IR GAS DETECTOR

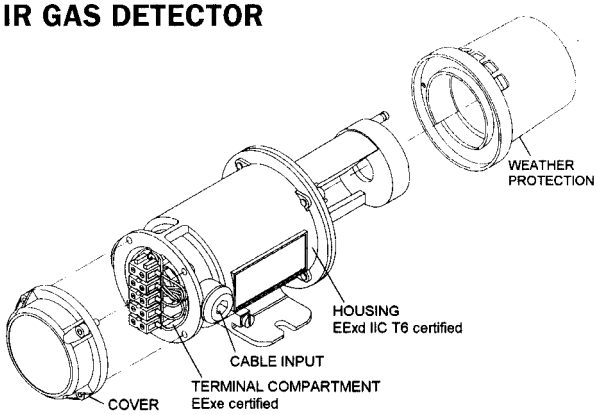

Additional Equipment:

- Sample flow housing
- Duct mounting bracket
- Bridge interface assembly
- Interface bracket

Special features include:

- **Proven high reliability and long-term stability**
- **No calibration or maintenance required during equipment lifetime**
- **Automatic self test**
- **Failure will not give gas alarm**
- **Immunity to poisoning from H_2S, silicone and other agents**
- **No saturation effects from high gas concentrations**
- **Easily retrofitted into existing systems**

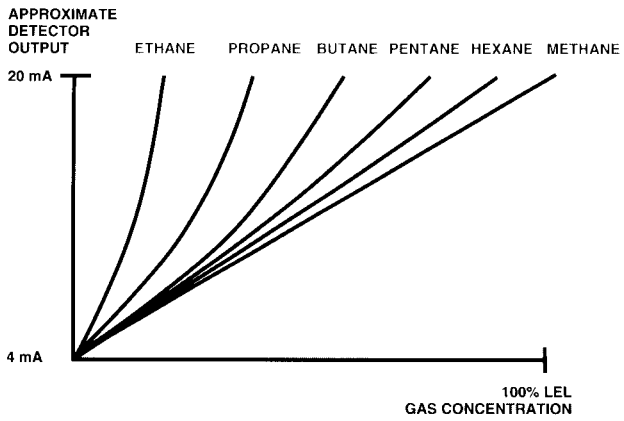

Detector Concept

The Simrad GD10 concept is based on measurement of infrared radiation passing through a volume of gas. Since most gases have unique absorption spectra, they can easily be identified by proper selection of an infrared wavelength at which absorption is measured. Radiation at another wavelength measures the overall transmission through the optical system and the air volume. By comparing the transmission at the two wavelengths, the gas concentration in the air is determined. Having chosen a wavelength which is characteristic of one type of gas, other gases will not cause false alarms.

Using a solid-state IR source instead of a lamp ensures high reliability and long-term stability with no maintenance required during equipment lifetime.

Transmittance as a function of wavelength.

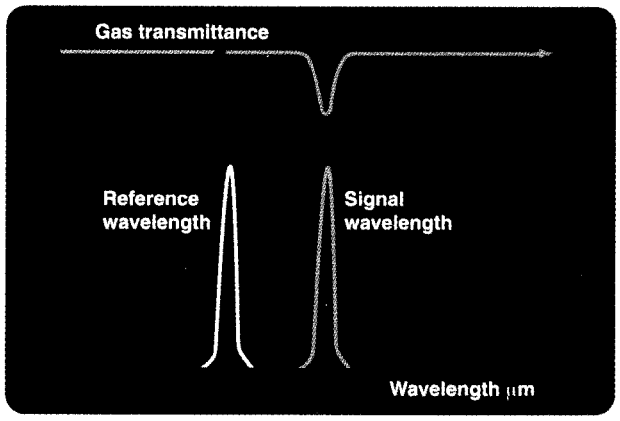

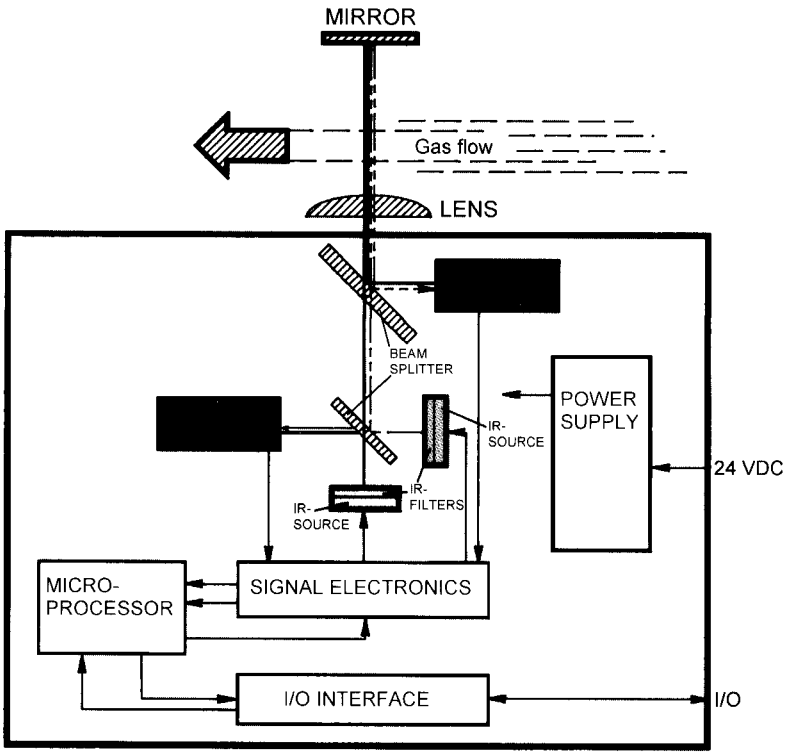

The GD10 Gas Detector consists of three main units; optical unit, electronics unit and power unit, all housed in the explosion-proof housing. Modulated radiation from two IR-sources at two different wavelengths is transmitted through a lens and reflected by a mirror mounted outside the enclosure.

The reflected IR-radiation is received by a main detector while IR radiation from an internal compensation path hits the compensation detector. These signals are amplified and fed to the microprocessor for gas concentration calculations and fault detection.

TECHNICAL DATA SIMRAD GD10 IR GAS DETECTOR

General	
Detection range	0-100% LEL (0-5% Vol) Methane
- option	0-100% Vol Methane
- option	Other gases on request
Long term stability	Better than ±5%
Accuracy	Better than ±3% of full scale between 0-50% reading Better than ±5% of full scale between 50-100% reading
Response time	5 seconds - (Option: 1 second)
Start-up time	< 60 seconds
Self test	Continuous
Calibration	Factory set
Output signal:	
Standard	Current source 4-20 mA, max total load impedance 500Ω
- option	Current sink 4-20 mA
- option	Digital bus RS485
Sensor warnings:	
- clean optics	Dirt accumulation on windows
- sensor failure	Internal malfunction in the sensor.
Electrical:	
Power supply	24 V DC (Range: 18-32 V DC)
Power consumption	Approx 3.5 W
Electrical connection	3 wires
Temperature range:	
Operating	-20°C to +45°C
Operating (option)	-30°C to +60°C
Storage	-40°C to +70°C
Humidity (operation)	99% RH
Certification:	
Main compartment	Ⓔx EExd IIC T6 (CENELEC)
Terminal compartment	Ⓔx EExe (CENELEC)
Ingress protection	IP 66 / IP67 DIN 40050
Enclosure	
Housing material	Stainless steel SIS 2343 (ASTM 316)
Weight incl. Weather Protection	Approx 2.9 kg
Accessories	Weather Protection Sample Flow Housing Duct Mounting Brackets

Outline dimensions in mm.

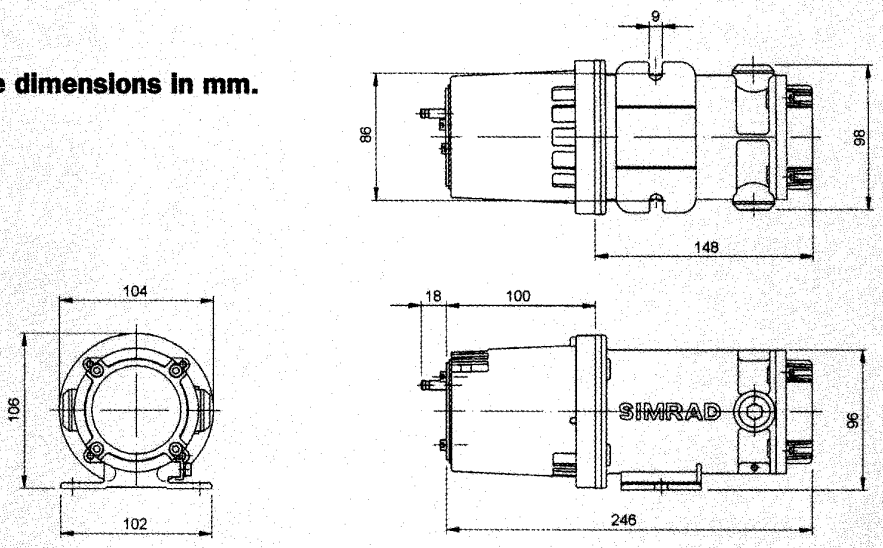

P3361E March 1997/DL GRAFISK A/S

SIMRAD OPTRONICS ASA RESERVES THE RIGHT TO ALTER SPECIFICATIONS WITHOUT PRIOR NOTICE

Optronics
Simrad Optronics ASA
P.O.Box 6114 Etterstad
0602 Oslo, NORWAY
Telephone: +47 22 67 04 90
Telefax: +47 22 19 29 91/22 67 63 14

Extensive world-wide network of authorized distributors and agents

4.6.1.2 Performance characteristics

Gas data

The GD10 standard version is factory calibrated and linearized with methane gas in the 0-100 % LEL range. Calibration/linearization to other gases or concentrations can also be done.

Accurate measurements can only be achieved by having the detector calibrated for the gas it is intended to measure.

Gases such as ethane, propane and butane are also detected by the GD10. A GD10 calibrated for methane has a higher sensitivity to these gases than to methane. This means that explosion danger from other HC-gases will always be detected by the GD10.

Because of tolerances in the infrared filters, readings of other gases than methane will not be exact when the detector is calibrated to 100% LEL methane.

Converting % LEL to % v/v is based on ISO10156, Second edition 1996-02-15: "Gases and gas mixtures - Determination of fire potential and oxidizing ability for the selection of cylinder valve outlets".

The GD10 is designed for normal atmosphere pressure variation, but it is certified for pressure limits from 86 to 108 kPa.

Cross interference to other gases

Hydrocarbon gases such as methane, ethane, propane and butane are absorbing at a signal wavelength of 3.3 µm. These gases do not interfere at the reference wavelength at 3.0 µm. If the atmosphere to be monitored contains gases such as acetylene that absorb at the reference wavelength of 3.0 µm, misleading measurements may be obtained depending on the interfering gas concentration. In such cases, contact Simrad Optronics for information. A modified GD10 using another reference wavelength will eliminate the problems.

Water vapour, carbon dioxide, oxygen, nitrogen and other gases, which are present in normal air will not influence the measurements.

Gas detection system

Since the GD10 is a point detector, it must be mounted where gas leakage is most likely to occur. It should be considered whether the gas in question is heavier or lighter than air. The number of sensors recommended depends on room size, shape, airflow and so on. The GD10 can also be mounted on an air duct wall. For this purpose, duct mounting kits are available.

Owing to high reliability and extensive self-testing, the GD10 dramatically reduces the number of sensors needed, and voting between sensors is no longer necessary. As a result, maintenance routines can be relaxed without loosing system confidence and repair work is reduced to a minimum.

4.6.1.3 Operation

Start-up procedure

Ensure that system wiring and control system are in working order before switching on power to the detector.

The detector will then perform self-test and internal signal adjustments lasting for approx. 60 seconds and switch to measuring mode.

The output signal from the detector during this period is shown in Figure below (current output of the GD10 standard version). Signal output before 60 seconds is 0 mA, and signal output after 60 seconds is 4 mA (if no gas is present).

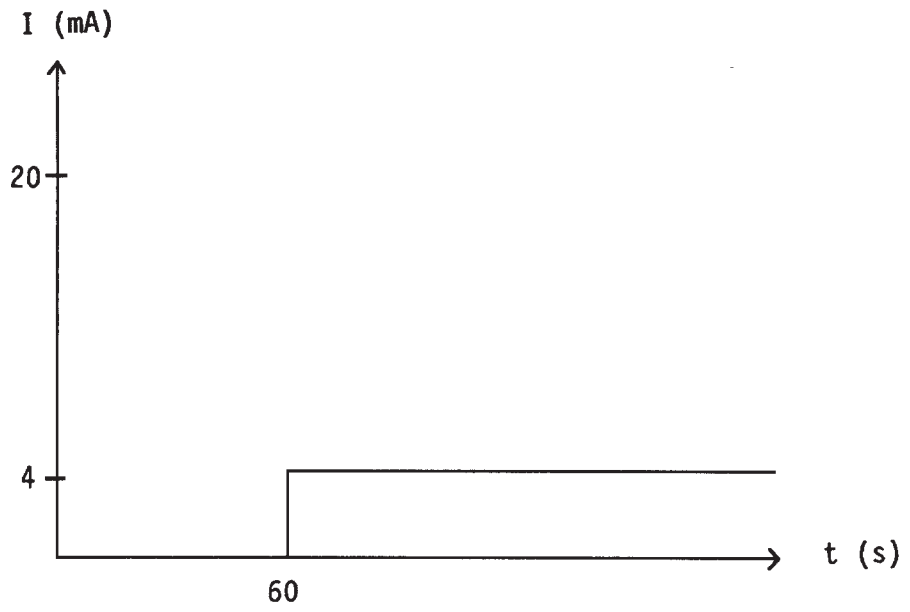

Figure: Signal output during start-up period

4.6.1.4 Maintenance

NOTE: The GD10 has no user adjustable parts. It is not recommended to open the GD10, as this will change the internal atmosphere, and the initial calibration could be affected.

General

The GD10 has been designed to require a minimum of maintenance. The only necessary maintenance is to inspect visually that the Weather Protection is not clogged in heavily contaminated areas.

Failure indications

The internal microprocessor performs continuous self-testing of optical and electronic functions.

If transmittance in the optical path should be reduced with more than 70%, the processor will generate a 1 mA output signal. This signal, "CLEAN OPTICS", indicates that the window and mirror of the detector need to be cleaned to restore normal operation.

If a fatal error should occur in the electronics or optics, the processor will generate a 0 mA output signal, indicating sensor failure.

The detector should then be checked according to Figure on the next page. Do not return the instrument to Simrad Optronics for repair if this test has not been performed.

NOTE: Avoid direct light on lens and mirror if testing without the Weather Protection.

NOTE: Ensure that no gas is present in the measuring chamber when testing.

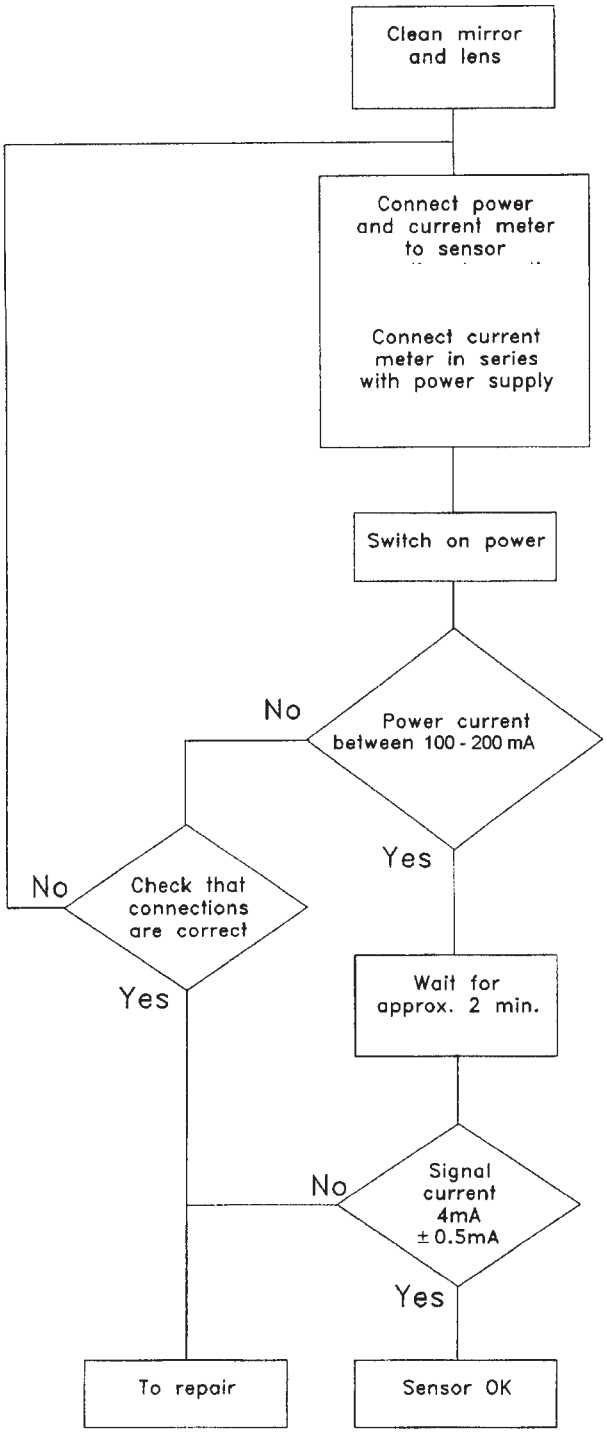

Figure: Test procedure

Cleaning of optical window and mirror

If the optical window and mirror have to be cleaned, use a soft and clean tissue to rub off the contamination. The window and mirror are made of sapphire, which is highly resistant to rubbing. Make sure that the whole optical surface is clean.

NOTE: For difficult contaminants the mirror and lens can be cleaned with an equal-part mixture of isopropyl alcohol and water. Do not perform any testing of the sensor before cleaning solution is dried away.

5.SPARE PARTS LIST

SPARE PARTS SET SW2020
ART. NO 1710

Description	Q'ty	Art. No
Solenoid valve 3-way 6014-T-2.0 / 6014-D-2.0	1	4652
Solenoid valve 2-way 6013-A-2.0	1	4651
Solenoid valve 2-way 6013-A-2.0 5 W	1	4654
Manual shut-off valve	1	4232
Flame trap FTH-1/4	1	4227
On-line filter SS	1	4227
Filter element	10	4229
Hose coupling 6/4 - 1/8"	5	4270
Loctite 577	1	4236
Teflon hose 6/4	2 m	4219
Viton hose 7/5	0.2 m	4220
Vacuum meter	1	4246
Gasket set for 15 L pump 7350	1	7351
Pressure Guard	1	7303
Relay 24V / 2P-5A	2	12015
Fuse 500 mAT 5 x 20	10	8200
Fuse 100 mAT 5 x 20	10	8218
Fuse 315 mAT 5 x 20	10	8219
Fuse 3.15 AT 5 x 20	10	8204
Fuse 4 AT 5 x 20	10	8225

6. PRODUCTS LIST

ANALYZING UNIT
Standard one pump system

Pos	Description	Code	Type	Data	Art. No
1	Pump	P1, P2	107 CCD20	15 l/min, 230V 50/60 Hz	7350
2	Solenoid Valve	V1 (one pump syst.)	6013-A-2.0	24 V=,8W,0-10 kp	4651
3	Solenoid Valve	V1 (two pump syst.)	6014-T-2.0 or 6014-C-2.0	24 V=,5W,0-6kp or 8W,0-10 kp	4652/4653
4	Solenoid Valve	V2	6013-A-2.0	24 V=,5W,0-10 kp	4654
5	Solenoid Valve	V3	6013-A-2.0	24 V=,8W,0-10 kp	4651
6	Solenoid Valve	V4	6013-A-2.0	24 V=,5W,0-10 kp	4654
7	Solenoid Valve	V5	6014-T-2.0 or 6014-C-2.0	24 V=,5W,0-6kp or 8W,0-10 kp	4652/4653
8	Solenoid Valve	V6	6014-T-2.0 or 6014-C-2.0	24 V=,5W,0-6kp or 8W,0-10 kp	4652/4653
9	Solenoid Valve	V7	6014-T-2.0 or 6014-C-2.0	24 V=,5W,0-6kp or 8W,0-10 kp	4652/4653
10	Solenoid Valve	V8	6014-T-2.0 or 6014-C-2.0	24 V=,5W,0-6kp or 8W,0-10 kp	4652/4653
11	Solenoid Valve	V9	330-D-2.0	24 V=,8W,0-10 kp	4655
12	Solenoid Valve	V101 - V104	6013-A-2.0 or 6014-T-2.0 alt 6014-D-2.0	24 V=,8W,0-10 kp or 5W,0-6kp alt 8W,0-10kp	4651/4652
13	Solenoid Valve	Vx	6013-A-2.0 or 6014-T-2.0 alt 6014-D-2.0	24 V=,8W,0-10 kp or 5W,0-6kp alt 8W,0-10kp	4651/4652
14	Solenoid Valve	Vx+1	6013-A-2.0 or 6014-T-2.0 alt 6014-D-2.0	24 V=,8W,0-10 kp or 5W,0-6kp alt 8W,0-10kp	4651/4652
15	Solenoid Valve	Vn-1	6013-A-2.0 or 6014-T-2.0 alt 6014-D-2.0	24 V=,8W,0-10 kp or 5W,0-6kp alt 8W,0-10kp	4651/4652
16	Solenoid Valve	Vn	6013-A-2.0 or 6014-T-2.0 alt 6014-D-2.0	24 V=,8W,0-10 kp or 5W,0-6kp alt 8W,0-10kp	4651/4652
17	Pressure Guard	PS	620.9100	2-8 mbar	7303
18	Vacuum Guard	VS, VS1, VS2	VCM 095		7306
19	Choke Valve	S1, S2, S3	RT	0,5 mm	7342
20	Flow Meter	FM	Brooks 2700	0-300 l/h	7310
21	Detectors		Custom designed	Required	

Pos	Description	Code	Type	Data	Art. No
22	Filter/Pressure Reg.	PR	N1204-D00	0 - 4 kp/cm²	7307
23	Pressure Instrument	PRI	M043	0 - 4 kp/cm²	7308
24	Filter	F	N204-F00		7309
25	Choke Valve	S4, S5-Sx	SCO - 604 - 1/8”/ 8290 - 1/8"	Adjustable	7241
26	Flame Trap Outlet	FT	FTH - 1/4		4227
27	Flame Trap Sampling Point	FT	FTH - 1/4		4227
28	Power Supply Unit	PSK - 4	PSK - 4 / SP-100	220 VAC ± 10-15% / 24 VDC	53000/53030
29	Automatic Fuse		E21 12250	4 A	12001
30	Relay	RL1 - RL8	E40 06823	24VDC 2P5A	12015
31	Remote Input/Output PCB	RIOK - 40	RIOM - 40		19240
32	Remote Output PCB	RIOK - 41	RIOM - 41		19241
33	Flow Switch	FS	LPH - 125		7301

CONTROL UNIT ME400

34	Control panel	GSM - 3150	GSM - 3150		51000
35	I/O board	IKK - 4	IKK - 4		52000
36	Comm. board	AKK - 2	AKK - 2		52100

REPEATER UNIT MN400

37	Repeater panel	MN400			51500

TEST GAS ACCESSORIES

38	Test gas bottle B5 with 1.1% propane in air	9955
39	Test Gas bottle B5 with 1.1% propane, 20 ppm H_2S in N_2	9961
40	Test gas pressure and flow regulator valve with manometer for 1.1% propane in air	9954
41	Test gas pressure and flow regulator valve with manometer for 1.1% propane, 20 ppm H_2S in N_2	9960