Consilium Manuals

Consilium

When Safety Matters

Fire Detection System
Salwico Cargo

Final Drawing

SHI

Hull no. 2074

CMAB Ref: SG-28567

Fire Detection Systems

Consilium Marine

LIST OF DRAWINGS

Project: SHI H2074 **Ref.no: SG-28567**

Salwico Fire Detection System CCP

Page	Document no	Rev.	Date	Description
1				Front-page
2	28567-LOD	-	130410	List of drawings
3-6	SG28567	-	130410	Scope of supply list,
7	28567.FDS.01.01	-	130410	Block diagram
8-12	28567.FDS.02.01	-	130410	Fire central, control & repeater panel dimension
13-19	28567.FDS.03.01	-	130410	Fire central cabinet, connection drawings
20-70				Datasheets of loop units etc.
71				Cerification list for explosion proof equipment.
72-87				Cerificates for explosion proof equipment.

The above drawings have been approved for release:	Sign YSN	Date 10 Apr 2013

Comments to the approval drawings and scope of supply must be given minimum 7 weeks prior to contracted delivery date.

Consilium Marine

2013-04-10 YSN/WYL

SCOPE OF SUPPLY LIST

Product Salwico Fire Alarm System CCP

Our Ref. No. SG-28567

Shipyard Samsung Shipbuild & Heavy Ind.
530, Jangpyung-Ri, Shinhy
P.O. Box Go Hyun 9
Kyung Sang Nam-Do
KOREA

NB H2074

Q´ty	DESCRIPTION
1	SG28567_FDS Salwico Cargo, Fire alarm central in wall mounted cabinet including: - Control M4,3 - 9, Loop M X, Loop Module - Bus con M 10 - Bus con M 20 - I/O M 700, Output Module 8 * 700mA Outputs - 3, Relay M8, Relay Module 8 Programmable Relay Outputs - Change Over M X H - Charger M - PSU M AC/DC 5A - Lead Gel batteries 24V/2AH (2x12V/2Ah) (2pcs needed) - Wall mounted cabinet 440x570x180 (RAL 7035)
2	5100195-20A Control/Repeater M4,3, console mounting
1	5100096-20A Repeater M4,3, console mounting
3	N18103 Address label (189 pcs)
7	40000 + 46916 + 46950 EV-H54/IP55, Analogue Addressable Heat (54 DegC) Detector with IP55 base
2	40005 + 46916 + 46950 EV-H/84/IP55, analogue addressable Heat (84 DegC) Detector, wet spaces
127	40020 + 44445 EV-P/IP22, analogue addressable optical smoke detector, dry space
189	40020 + 46916 + 46950 EV-P/IP55, analogue addressable optical smoke detector, wet space

16	N11250 + N1430 + 46950 AOHS-IS, analogue, addressable Intrinsically Safe Optical Smoke/heat detector, wet space.
2	60060-001010 NS-ACP-IS, manual call point, wet space, Intrinsically safe
6	N1790 ISOLATOR-A, IS isolator with enclosure for addressable IS detectors
12	5200236-00A + 5200237-00A AC-IR-3Fq Addr, Triple IR flame detector with addressable base
23	5200030-01A MCP-A/IP23, Addressable Manual Call Point with inbuilt SCI for dry space IP23
31	5200031-01A MCP-A/IP67, Addressable Manual Call Point with inbuilt SCI for wet space IP67
2	N1307 NS-GA2, General alarm push button “Auto / Manual” IP22
25	7102+7107 GPT+AG, Door Holder Magnet, 65kP, 24VDC, with push button
1	5200276-00A TC10 WP, Timer Control Unit
1	N1546 FLASHNI, siren, 24VDC, with base plate for wet space.

WORKING SPARE

2	40020 + 46916 + 46950 EV-P/IP55, analogue addressable optical smoke detector, wet space
2	40020 + 44445 EV-P/IP22, analogue addressable optical smoke detector, dry space
1	40000 + 44445 EV-H/54/IP22, analogue addressable Heat (54 DegC) Detector, dry spaces
1	5200236-00A + 5200237-00A AC-IR-3Fq Addr, Triple IR flame detector with addressable base
1	5200075-00A MCP-C SPARE, Spare Glasses for Manual Call points 10pcs

SPARE PARTS

1	7200113 Box for spare parts (steel) 350x200x199
1	40000 EV-H/54, analogue addressable Heat (54 DegC) Detector head
1	40005 EV-H/84, analogue addressable Heat (84 DegC) Detector head
10	40020 EV-P, analogue addressable optical smoke detector head
1	40030 EV-PH+UB5, Analogue Addressable Optical Dual Smoke/Heat Detector head
1	5200030-01A MCP-A/IP23, Addressable Manual Call Point with inbuilt SCI for dry space IP23
1	5200031-01A MCP-A/IP67, Addressable Manual Call Point with inbuilt SCI for wet space IP67
1	N11250 AOHS-IS, analogue, addressable Intrinsically Safe Optical Smoke/heat detector head
1	5200075-00A MCP-C SPARE, Spare Glasses for Manual Call points 10pcs

TEST EQUPMENT

1	N1738 + N1744 + 9151 Complete smoke detector tester with 4.0m test rod.
2	9153 Test gas bottle, aerosol, 150 ml, for Solo 330
1	N1743 Cordless Heat detector tester kit
1	1156 Salwico IR Test Lamp, Flame detector Tester
1	5200123-00A EV-AD 2, Addressing tool

If shield type is used, cable loop allowable length will be shorter than unshield type.
Unshielded cable: Max. cable length = 3000m
(Using min. a 0.75 mm2 cable, otherwise max. 2000m)
Shielded cable: Max. cable length = 2000m
(Using min. a 0.75 mm2 cable, otherwise max. 1000m)

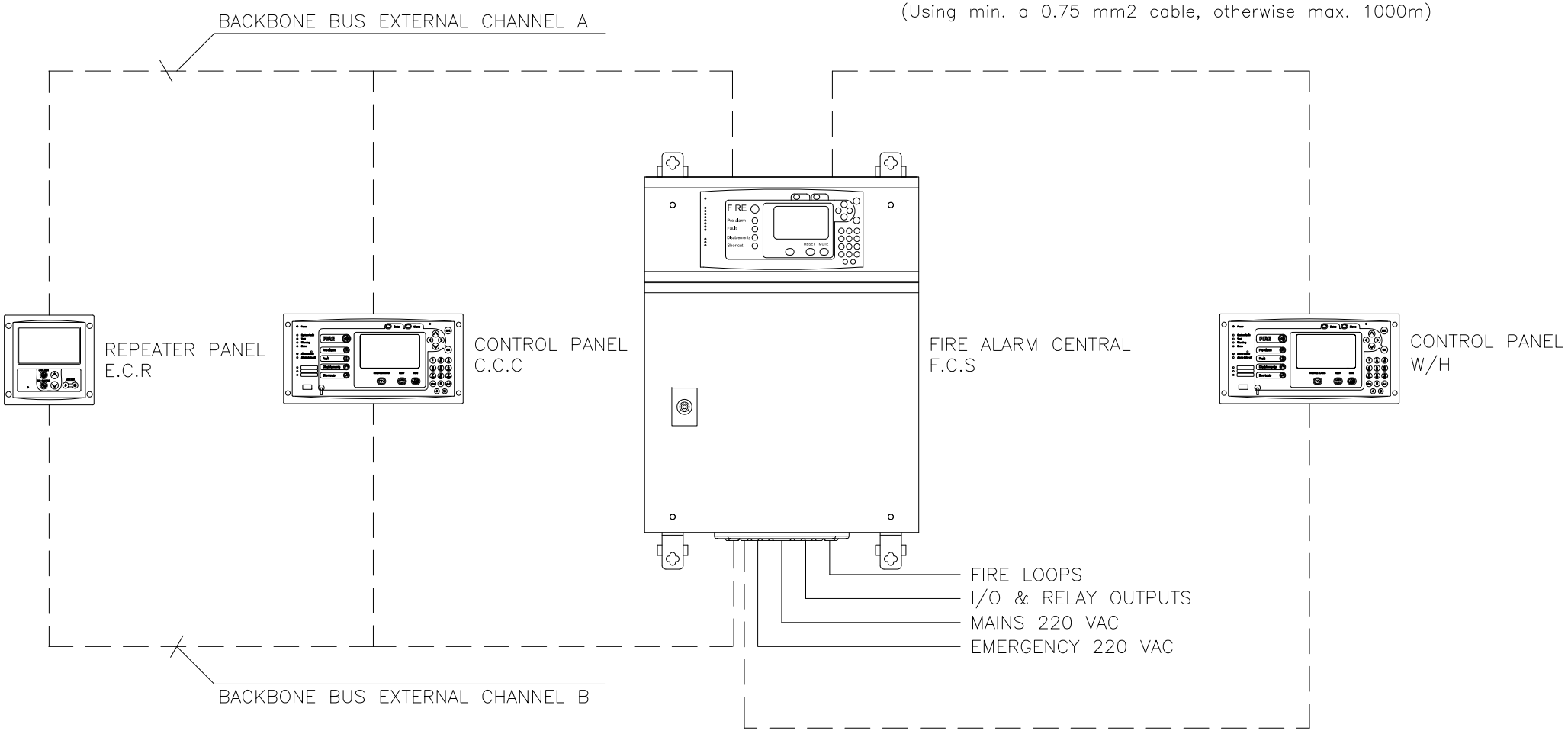

BBE CABLE: 2x2x0.75 TWISTED PAIR WITH SHIELD
SEPARATED CABLE ROUTES

24VDC CABLE: 2x1.5
SEPARATED CABLE ROUTES

FIRE/SPRINKLER LOOP CABLE: 2x0.75 WITHOUT SHIELD

BLOCK DIAGRAM

Project: BW MARITIME			SHI H2074
Project No: 28567	Size A3-4	Scale	BLOCK DIAGRAM
Consilium Göteborg, Sweden www.consilium.se Copyright Consilium Marine AB	Design YSN	Approved WYL	FIRE DETECTION SYSTEM SALWICO FDS
	Date: 10.04.13		Drawing no. 28567.FDS.01.01 / Rev. – / Page 1

DRAWING LIST

DIMENSION DRAWING SALWICO CARGO

PAGE	DESCRIPTION	REV
1	DRAWING LIST	–
2	CABINET DIMENSION DRAWING	–
3	LAYOUT DRAWING	–
4	CONTROL/REPEATER PANEL DIMENSION DRAWING	–
5	REPEATER M4,3 DRAWING	–
6		–
7		–
8		–
9		–
10		–
11		–
12		–
13		–
14		–
15		–

PAGE	DESCRIPTION	Rev
16		–
17		–
18		–
19		–
20		–
21		–
22		–
23		–
24		–
25		–
26		–
27		–
28		–
29		–
30		–

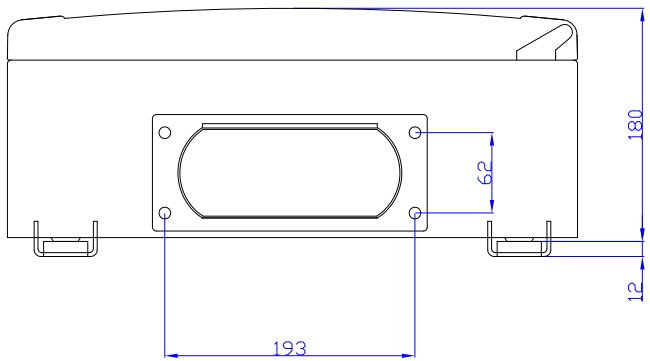

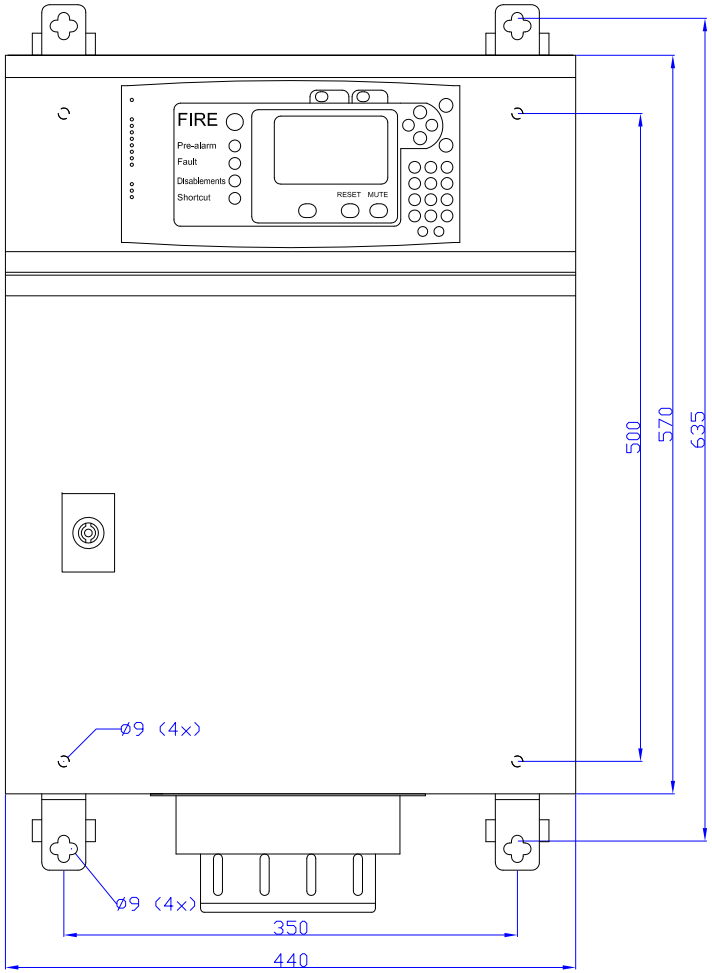

The cabinet can be mounted with wall mounting brackets or without.

Maximum bolt length when mounting without mounting brackets is 15 mm.

Mounting brackets and one cable coaming is included.

Colour: MUNSELL 7.5 BG 7/2
Weight: Complete central ~15 kg

CABINET DIMENSION DRAWING

Project: BW MARITIME			SHI H2074
Project No: 28567	Size A3-4	Scale N/A	DIMENSION DRAWING
Consilium Göteborg, Sweden www.consilium.se	Design YSN	Approved WYL	FIRE DETECTION SYSTEM
Copyright Consilium Marine AB	Date: 10.04.13		SALWICO FDS
			Drawing no. 28567.FDS.02.01 · Ver. – · Page 2

Rev.	Revision note	Date	Sign.
–			

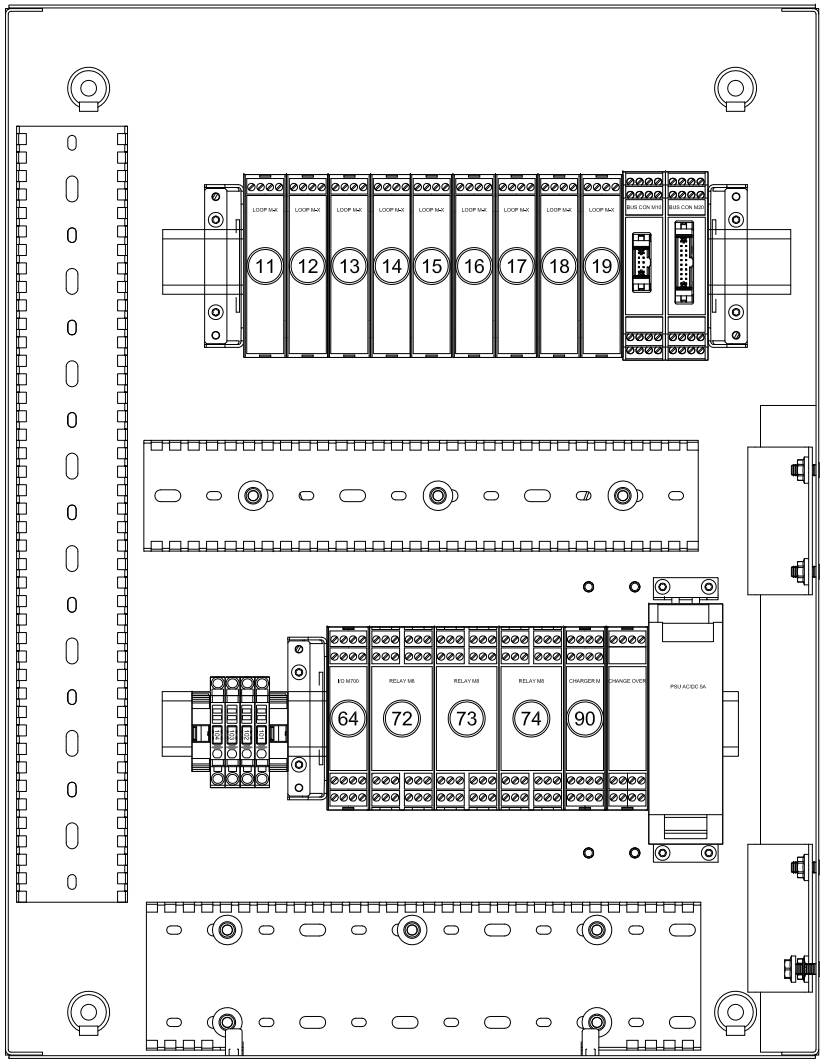

LAYOUT DRAWING

Project: BW MARITIME			SHI H2074
Project No: 28567	Size A3–4	Scale N/A	DIMENSION DRAWING
Consilium Göteborg, Sweden www.consilium.se	Design YSN	Approved WYL	FIRE DETECTION SYSTEM
Copyright Consilium Marine AB	Date: 10.04.13		SALWICO FDS
			Drawing no. 28567.FDS.02.01 — Ver. — Page 3

Rev.	Revision note	Date	Sign.
–			

Wall mounting

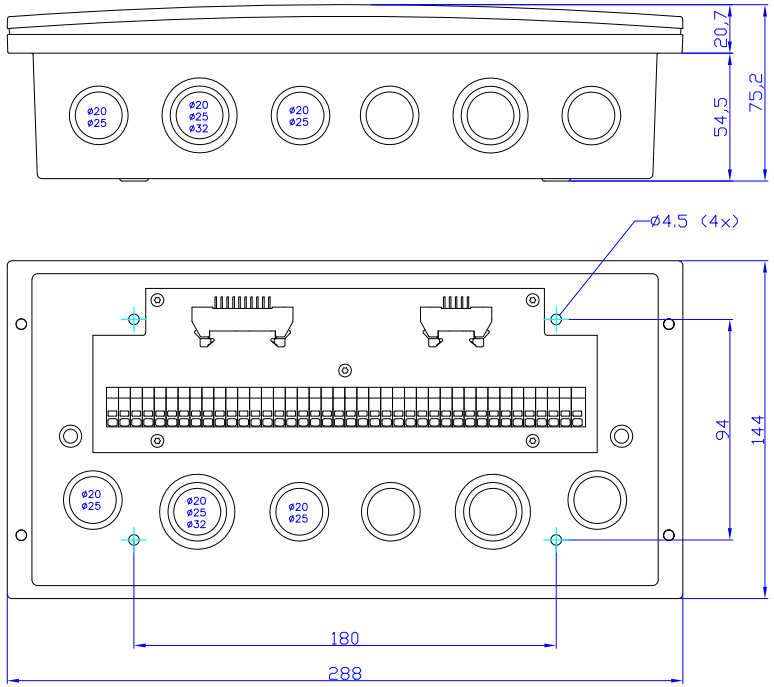

Console mounting

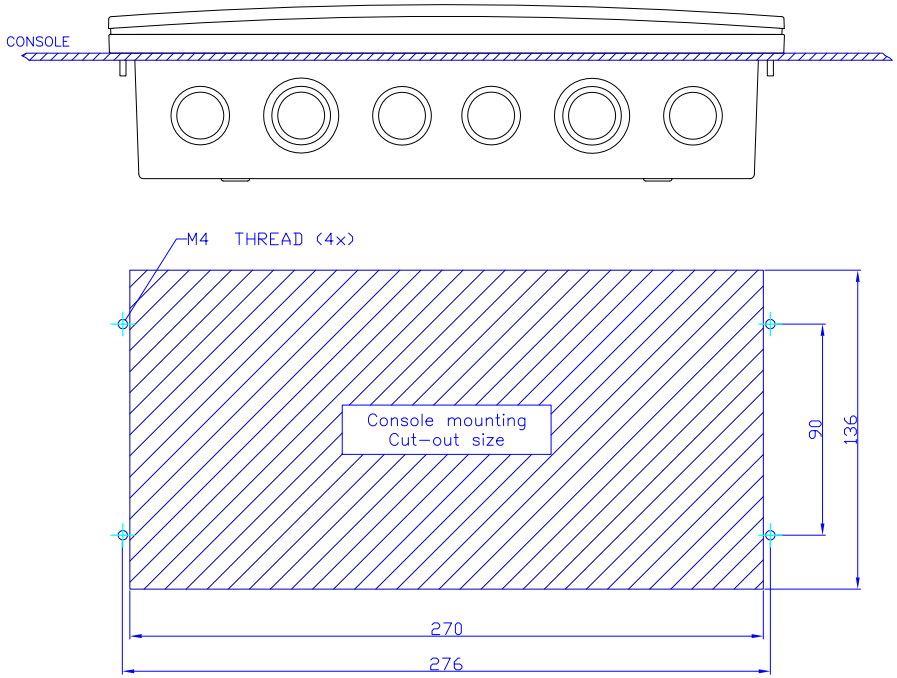

Knock-outs diametres.
12 x ø20 (6 from behind)
12 x ø25 (6 from behind)
4 x ø32 (2 from behind)

Colour: Black
Weight: Complete unit ~1.25 kg

CONTROL/REPEATER PANEL DIMENSION

Rev.	Revision note	Date	Sign.
–			

Project: BW MARITIME
Project No: 28567

Consilium
Göteborg, Sweden
www.consilium.se
Copyright Consilium Marine AB

Size	Scale
A3–4	N/A
Design	Approved
YSN	WYL

Date: 10.04.13

SHI H2074
DIMENSION DRAWING
FIRE DETECTION SYSTEM
SALWICO FDS

Drawing no.	Ver.	Page
28567.FDS.02.01	–	4

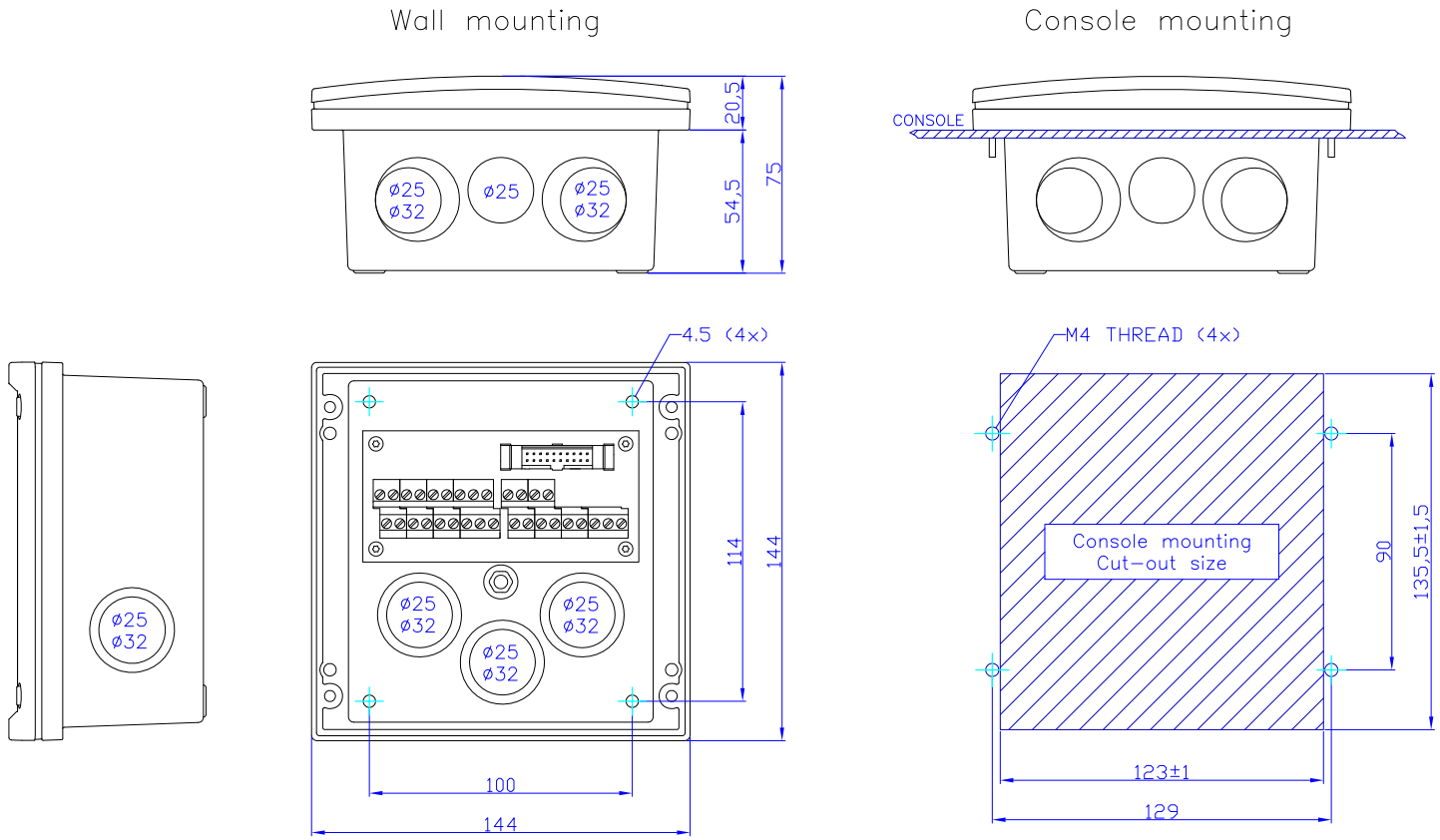

Knock-outs diametres.
8 x ø25 (3 from behind)
7 x ø32 (3 from behind)

Colour: Black

REPEATER M4,3 DIMENSION

Project: BW MARITIME			SHI H2074
Project No: 28567	Size A3-4	Scale N/A	DIMENSION DRAWING
Consilium Göteborg, Sweden www.consilium.se	Design YSN	Approved WYL	FIRE DETECTION SYSTEM
Copyright Consilium Marine AB	Date: 10.04.13		SALWICO FDS
			Drawing no. 28567.FDS.02.01 · Ver. – · Page 5

Rev.	Revision note	Date	Sign.
–			

DRAWING LIST

CONNECTION DRAWING SALWICO CARGO

PAGE	DESCRIPTION	Rev
1	DRAWING LIST	–
2	POWER SUPPLY CONNECTIONS	–
3	LOOP CONNECTIONS	–
4	EXTERNAL CONNECTION MAIN CABINET	–
5	RELAY CONNECTIONS	–
6	EXTERNAL CONNECTIONS CONTROL/REPEATER PANEL	–
7	LOOP UNIT CONNECTION DRAWING	–
8		–
9		–
10		–
11		–
12		–
13		–
14		–
15		–

PAGE	DESCRIPTION	Rev
16		–
17		–
18		–
19		–
20		–
21		–
22		–
23		–
24		–
25		–
26		–
27		–
28		–
29		–
30		–

Rev.	Revision note	Date	Sign.
–			

Project: BW MARITIME
Project No: 28567

Consilium
Göteborg, Sweden
www.consilium.se
Copyright Consilium Marine AB

Size	Scale
A3–4	N/A
Design	Approved
YSN	WYL

Date: 10.04.13

SHI H2074
CONNECTION DRAWING
FIRE DETECTION SYSTEM
SALWICO FDS

Drawing no.	Ver.	Page
28567.FDS.03.01	–	1

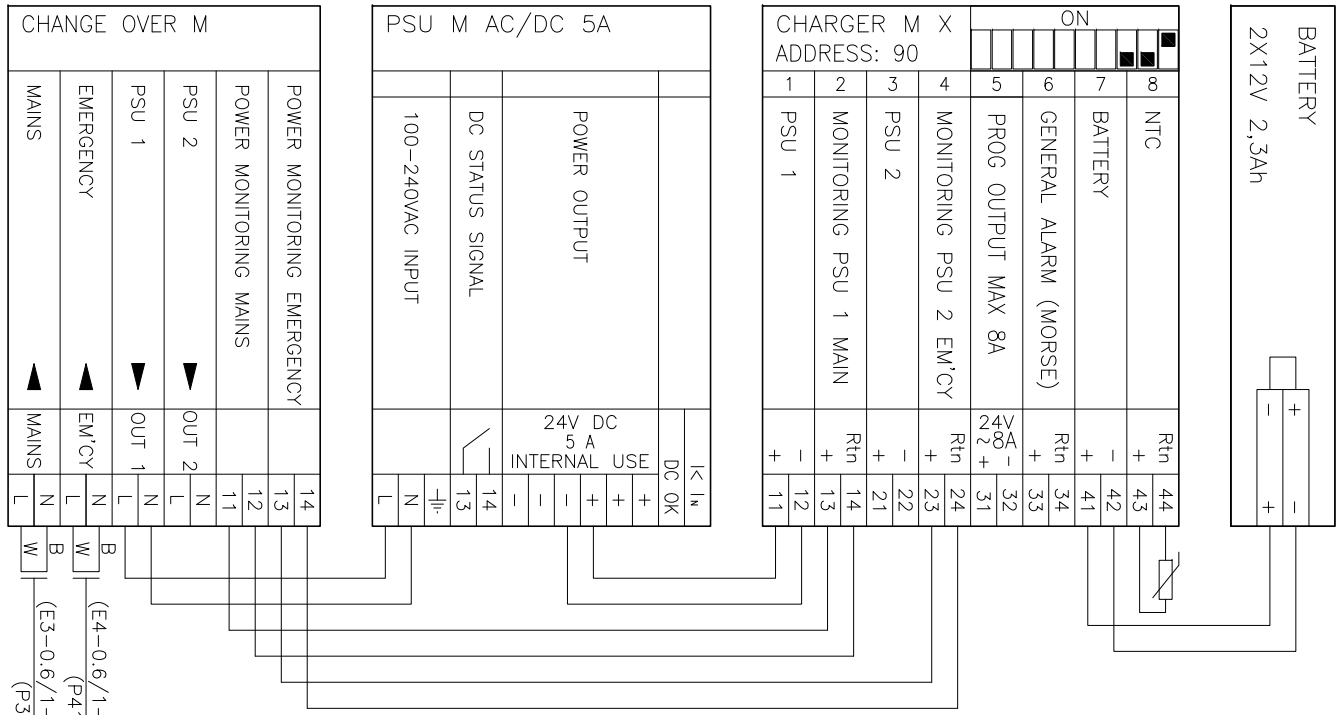

POWER SUPPLY CONNECTIONS

Project: BW MARITIME			SHI H2074
Project No: 28567	Size A3-4	Scale N/A	CONNECTION DRAWING
Consilium Göteborg, Sweden www.consilium.se	Design YSN	Approved WYL	FIRE DETECTION SYSTEM
Copyright Consilium Marine AB	Date: 10.04.13		SALWICO FDS
			Drawing no. 28567.FDS.03.01 · Ver. – · Page 2

Rev.	Revision note	Date	Sign.
–			

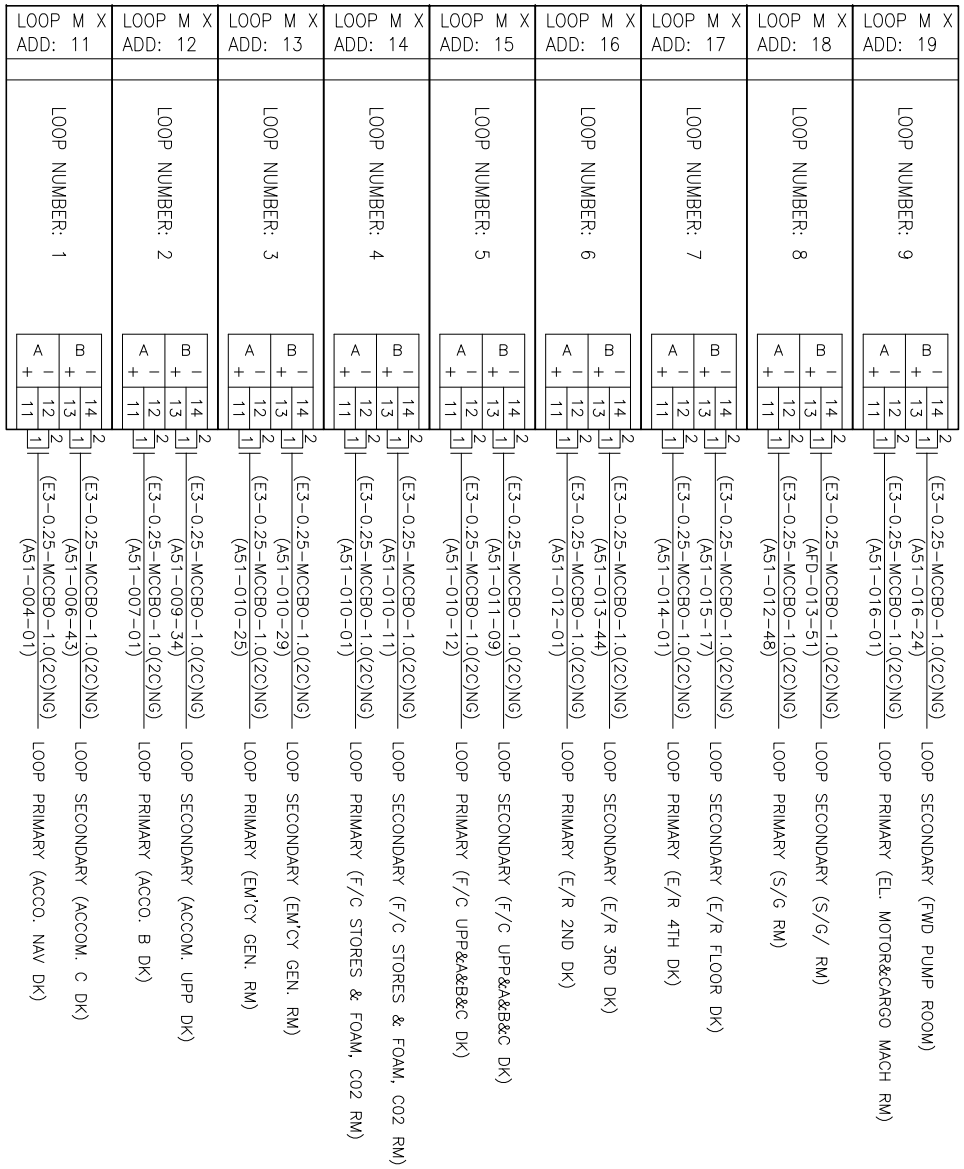

LOOP CONNECTIONS

Project: BW MARITIME			SHI H2074
Project No: 28567	Size A3-4	Scale N/A	CONNECTION DRAWING
Consilium Göteborg, Sweden www.consilium.se	Design YSN	Approved WYL	FIRE DETECTION SYSTEM
Copyright Consilium Marine AB	Date: 10.04.13		SALWICO FDS
			Drawing no. 28567.FDS.03.01 · Ver. – · Page 3

Rev.	Revision note	Date	Sign.
–			

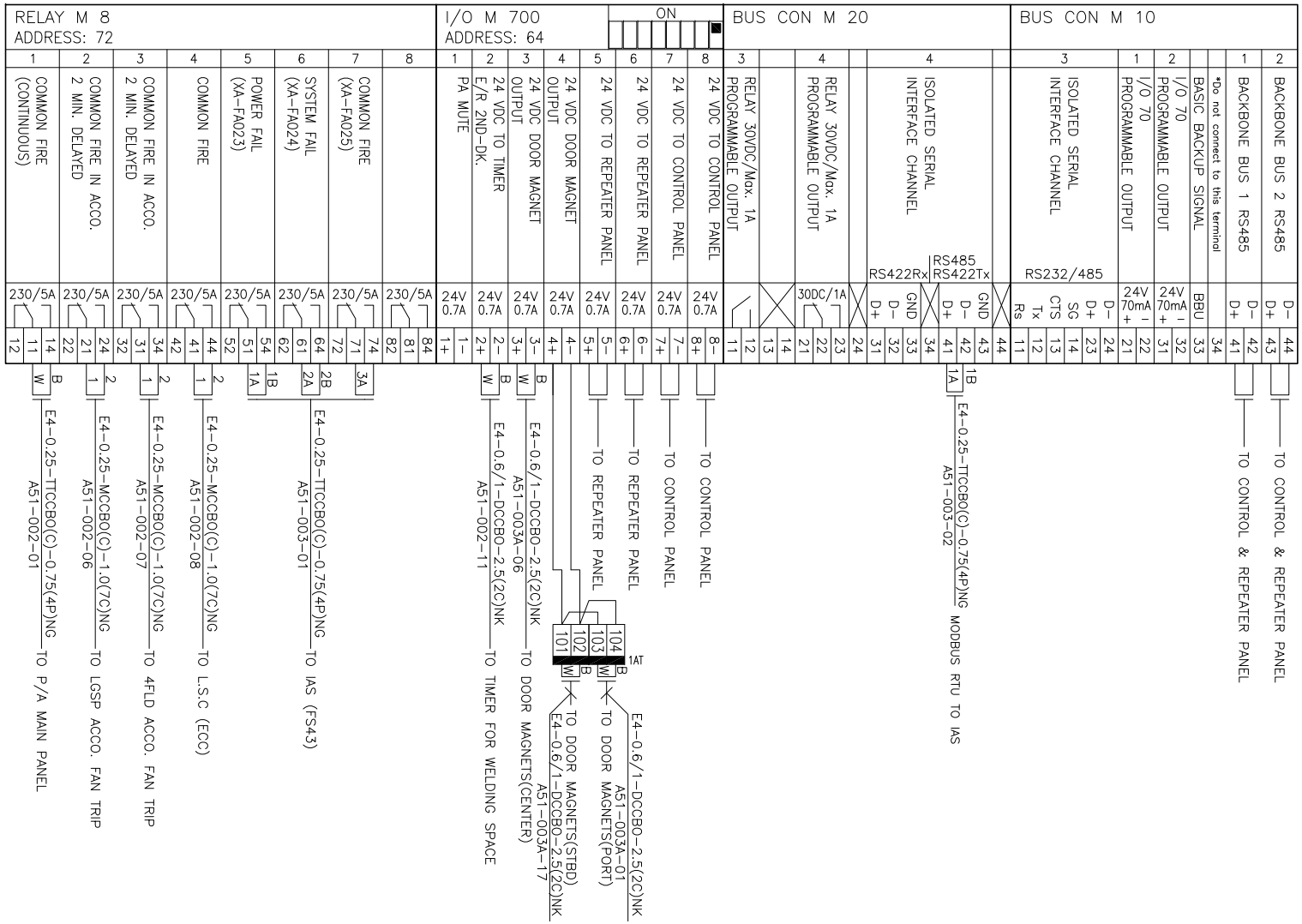

EXTERNAL CONNECTION MAIN CABINET

Project: BW MARITIME			SHI H2074
Project No: 28567	Size A3-4	Scale N/A	CONNECTION DRAWING
Consilium Göteborg, Sweden www.consilium.se	Design YSN	Approved WYL	FIRE DETECTION SYSTEM
Copyright Consilium Marine AB	Date: 10.04.13		SALWICO FDS
			Drawing no. 28567.FDS.03.01 — Ver. — Page 4

Rev.	Revision note	Date	Sign.
—			

*1. SPRINKLER RELEASE TO LOCAL FIRE PROTECTION
ACTIVATED BY 2 DETECTORS IN ALARM

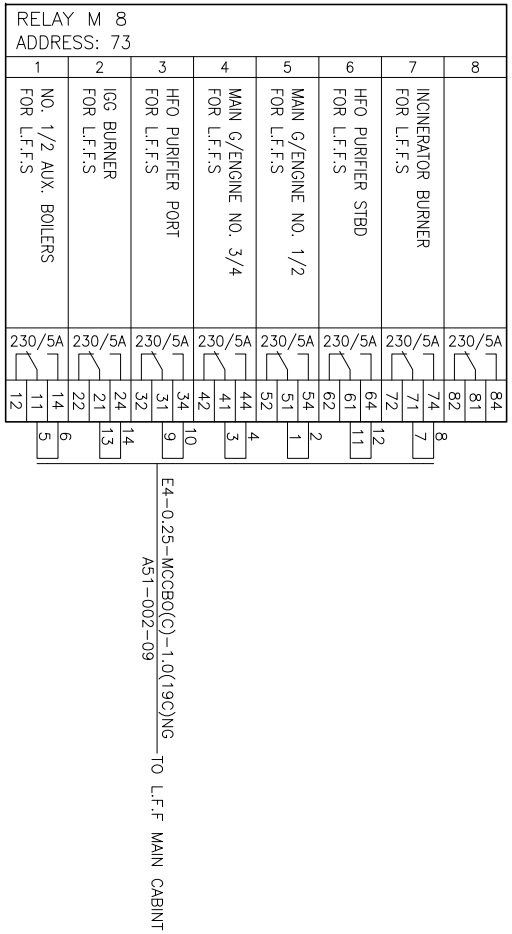

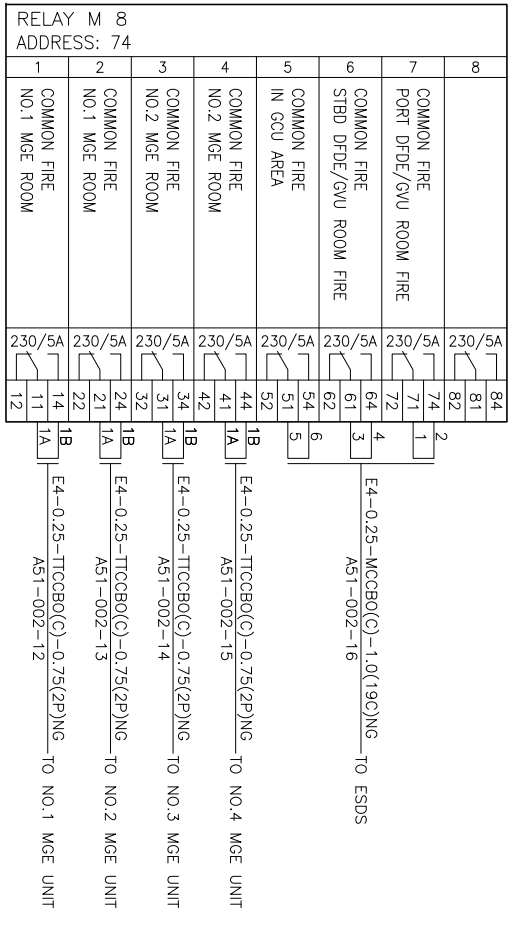

RELAY CONNECTIONS

Project: BW MARITIME			SHI H2074
Project No: 28567	Size A3-4	Scale N/A	CONNECTION DRAWING
Consilium Göteborg, Sweden www.consilium.se	Design YSN	Approved WYL	FIRE DETECTION SYSTEM
Copyright Consilium Marine AB	Date: 10.04.13		SALWICO FDS
			Drawing no. 28567.FDS.03.01 · Ver. – · Page 5

Rev.	Revision note	Date	Sign.
–			

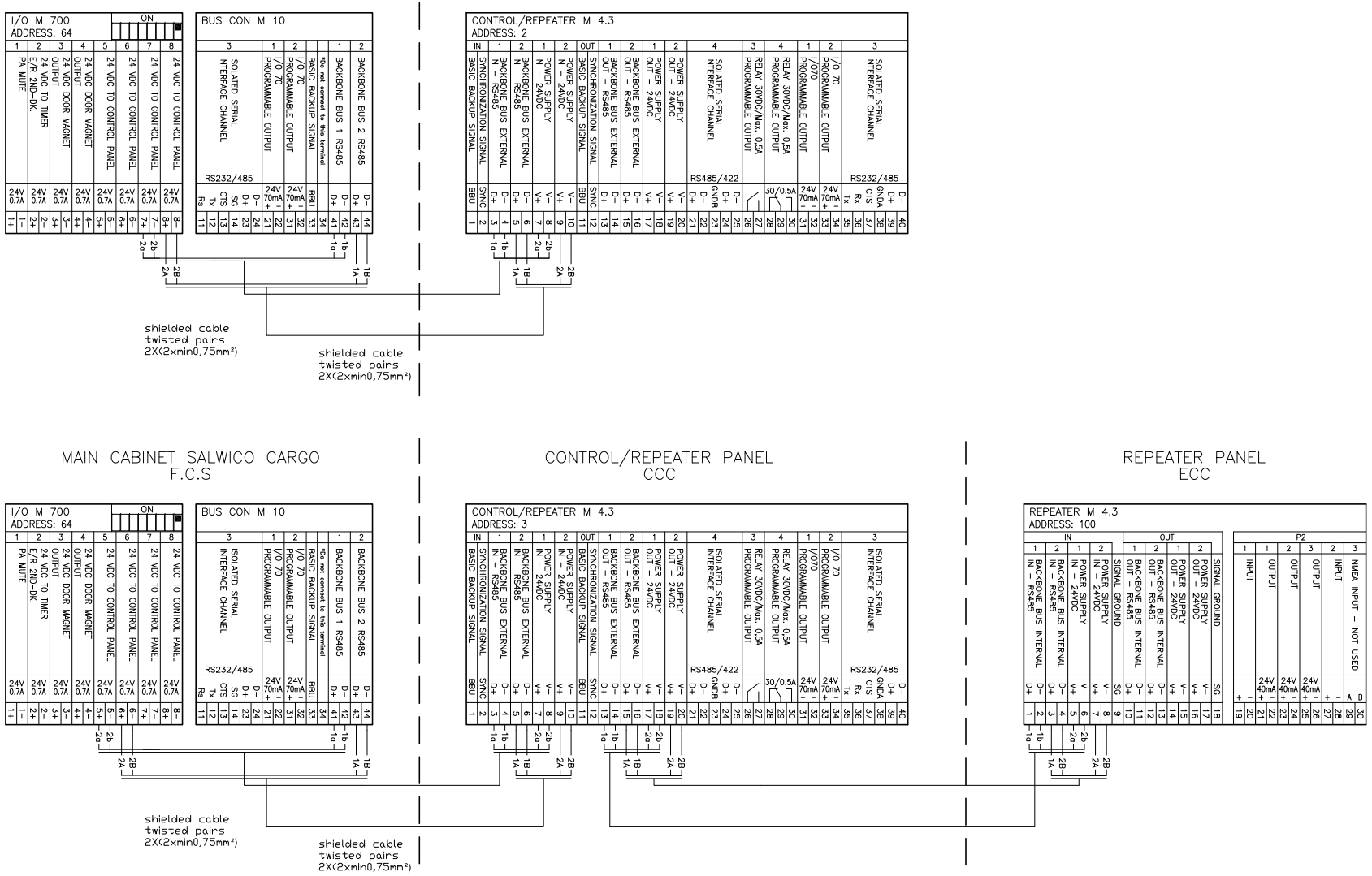

EXTERNAL CONNECTIONS CONTROL/REPEATER PANEL

Project: BW MARITIME			SHI H2074
Project No: 28567	Size A3–4	Scale N/A	CONNECTION DRAWING
Consilium Göteborg, Sweden www.consilium.se	Design YSN	Approved WYL	FIRE DETECTION SYSTEM
Copyright Consilium Marine AB	Date: 10.04.13		SALWICO FDS
			Drawing no. 28567.FDS.03.01 · Ver. – · Page 6

Rev.	Revision note	Date	Sign.
–			

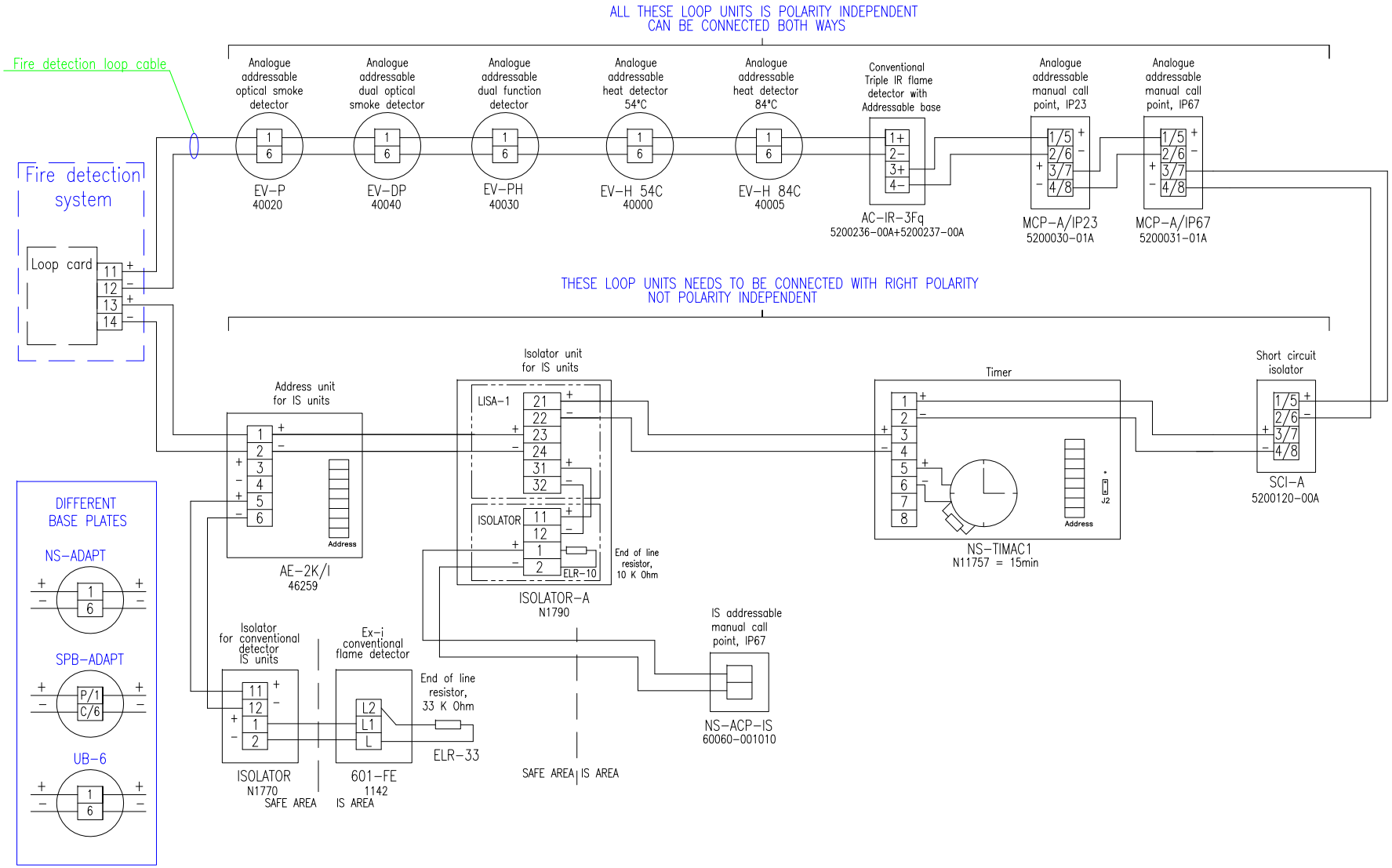

LOOP UNIT CONNECTION DRAWING

Project: BW MARITIME			SHI H2074
Project No: 28567	Size A3-4	Scale N/A	CONNECTION DRAWING
Consilium Göteborg, Sweden www.consilium.se	Design YSN	Approved WYL	FIRE DETECTION SYSTEM
Copyright Consilium Marine AB	Date: 10.04.13		SALWICO FDS
			Drawing no. 28567.FDS.03.01 · Ver. – · Page 7

Rev.	Revision note	Date	Sign.
–			

Control/Repeater Panel M 4.3

Part no see below

System: Salwico Cargo, Salwico Cruise, Salwico LNG, Salwico Offshore, Salwico Ro/Pax, Salwico Workboat, Salwico Yacht, Salwico Navy, OEM Extinguish

General Description

The Control/Repeater Panel M 4.3 is a control panel with a 4.3" graphical colour display used to manage and supervise a system. Control/Repeater Panel M 4.3 mounts on any flat surface independently from a fire alarm cabinet.
Control/Repeater Panel M 4.3 is equipped with communication buses for connecting to the system, and it provides the following features:

- A backlit 4.3" graphical colour display
- Alarm buzzer
- LED status indicators
- Backbone Bus Interface
- Ethernet connection
- RS-422/RS-485 interface
- RS-232/RS-485 interface
- Three USB interfaces
- Two configurable powered I/Os
- Two programmable relay outputs

Refer to the User Guide for more information on operating Control/Repeater M 4.3.
For details on assembling a system and definitions of common system terms, refer to the Installation Manual.

Part No.

Control/Repeater M 4.3 Cargo	5100195-20A
Control/Repeater M 4.3 Ro/Pax	5100195-30A
Control/Repeater M 4.3 Workboat	5100195-40A
Control/Repeater M 4.3 Yacht	5100195-50A
Control/Repeater M 4.3 Cruise	5100195-80A

Data

Operating voltage range	19-30 VDC
Current consumption (at 24V)	Normal 100 mA Max. 270 mA
Ingress protection	IP22
Operating temperature range	-5°C to +55°C
Weight	1250g
Display	4.3", 480×272 pixels, TFT
Ethernet	10/100 Mbit, autosense
USB Host	USB 1.1 1 in front, 1 on back
USB Device	USB 1.1 1 on back
Relays rating	Max. 30 VDC, 500 mA
I/O 70 (as input)	24 VDC 5-70 mA
I/O 70 (as output)	24 VDC Max. 70 mA
Cable terminals	2.5 mm²
SD Memory	(Optional)
Certified according to	CE ROHS EN 54-2 (1999/A1:2006) EN 60945 0845

Indicators

Control/Repeater Panel M 4.3 indicators display system status. Refer to the User Guide for more information.

Address Switch

This switch (see SW2 in figure Connection board) identifies modules in the system and sets the function. Control modules can serve as Bus Masters, i.e., operate in Controller Mode or in Managed Mode, for example repeaters and protocol converters. Address 1 and 2 are dedicated for control modules in Controller Mode. One control module per central shall be set in Controller Mode. If the system shall be reduntant it is required to have a second control module, also set in Controller Mode. Modes for Managed and Controller are set with DIP switches as described in the following table:

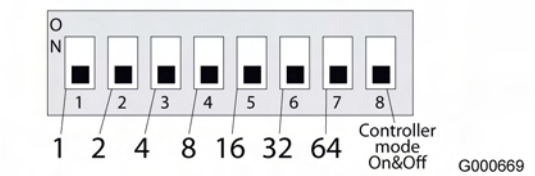

	Managed Mode	Controller Mode
DIP 8	Controller Mode (off)	Controller Mode (on)
DIP 7	Module Address (0-127)	Spare
DIP 6		Master (on/off)
DIP 5		Central Address (0-31)
DIP 4		
DIP 3		
DIP 2		
DIP 1		

Control Modules have two different modes of operation, as determined by their DIP settings (normally pre-set from factory):

Controller Mode

Single Central System:

Central 1 Primary
(automatically module address 1)

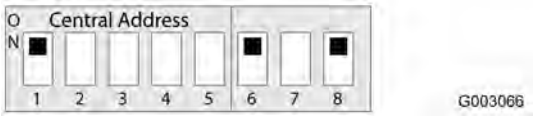

Central 1 Secondary (optional)
(automatically module address 2)

Multi Central System:

Central 1 Primary
(automatically module address 1)

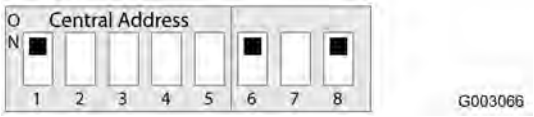

Central 1 Secondary (optional)
(automatically module address 2)

Central 30 Primary
(automatically module address 1)

Central 30 Secondary (optional)
(automatically module address 2)

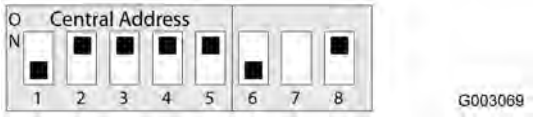

Managed Mode

Module Address 3-125

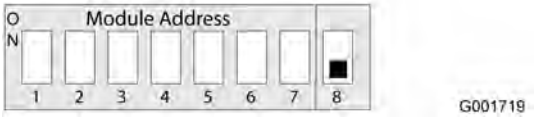

Connections

Control/Repeater Panel M 4.3 mounts outside of the central. Using ribbon cables, connect the Control/Repeater Panel M 4.3 to Terminal M (pre-fitted inside the Control/Repeater Panel M 4.3 casing, see *Module Dimensions (mm)*). All Control/ Repeater Panel M 4.3 connections are made on the Connection board, located at the back of the front panel. See figure *Connection board*.

Figure 1. Connection board

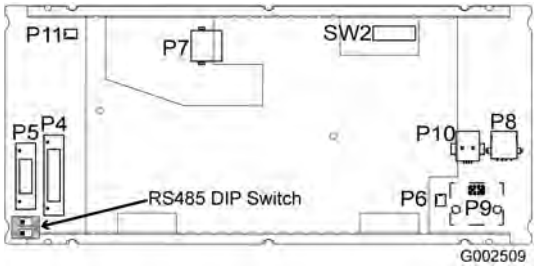

Connector no.	Function	Description
P4	Connection to Terminal M	20-pol. Flat Cable *
P5	Connection to Terminal M	10-pol. Flat Cable *
P6		Door Switch
P7		Ethernet
P8	Type A/ Host	USB
P9		USB Expansion Board
P10	Type B/ Device	USB
P11		External Buzzer (24V)

* See illustration below for connection to Terminal M.

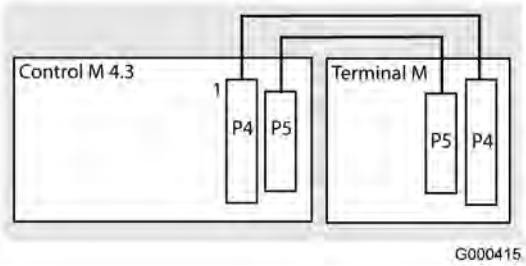

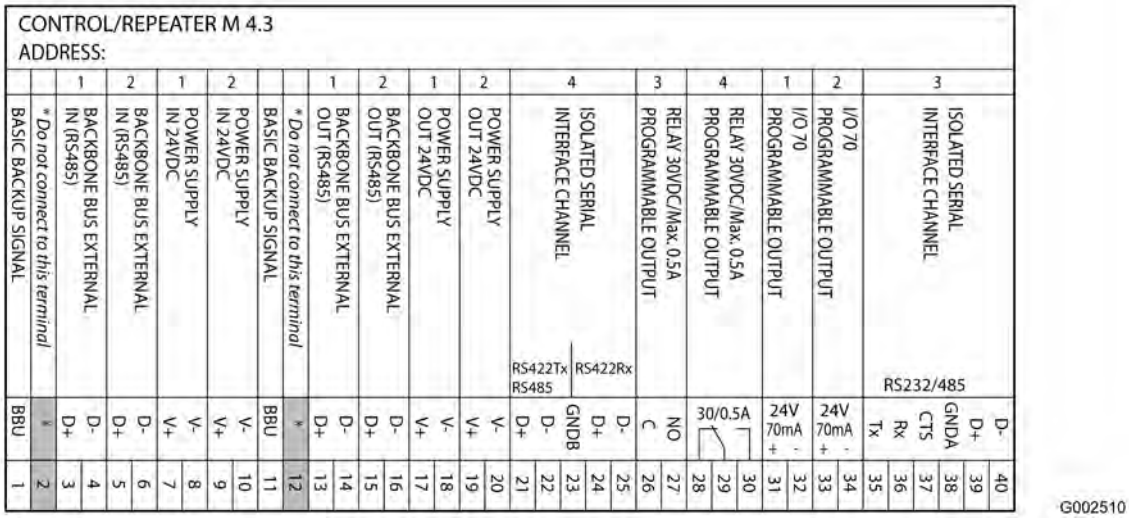

RS485 Termination

For RS485 Termination the built-in terminator (120 ohm) can be activated with the RS485 DIP switch located on the Connection board (see figure in Connections).
For recommendations and examples on RS485 Termination, refer to the Installation Manual.

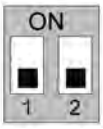

Table 1. DIP switch for RS485 Termination

DIP Switch No.	Description	ON	OFF
1	Channel 3	Active	Deactivated
2	Channel 4	Active	Deactivated

Module Dimensions (mm)

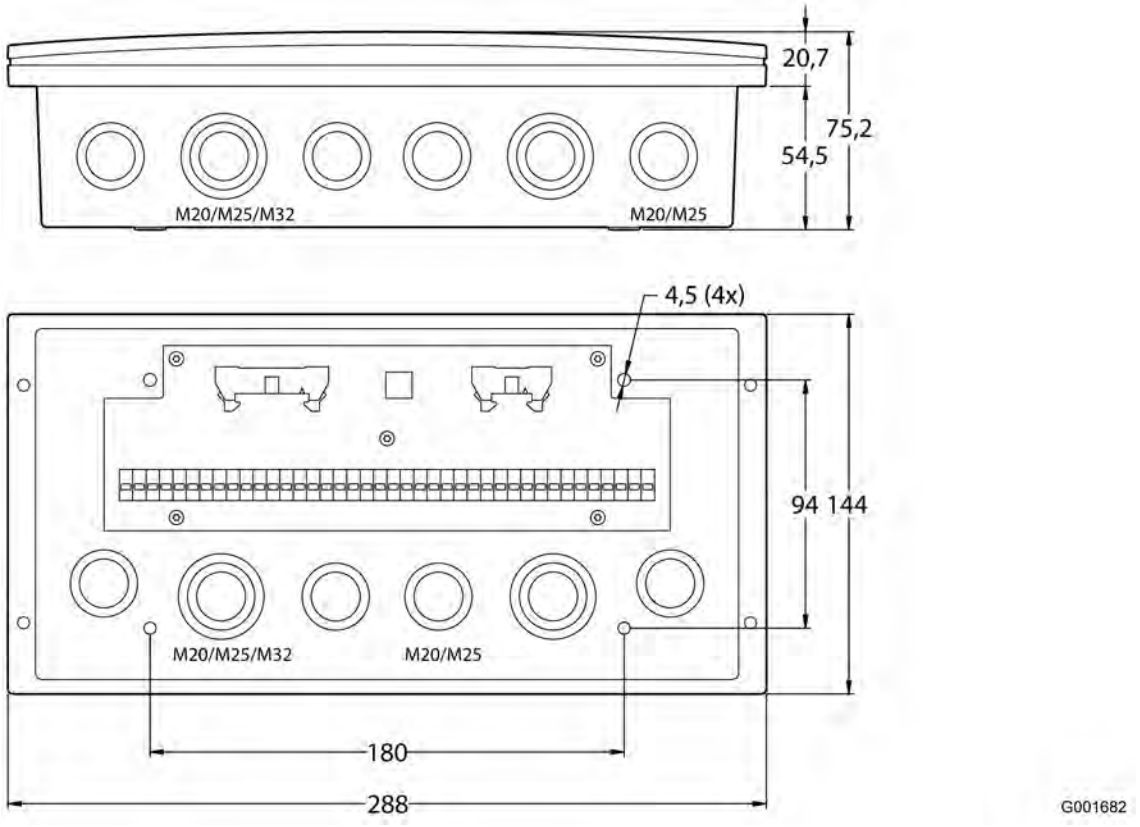

Mounting Dimensions (mm)

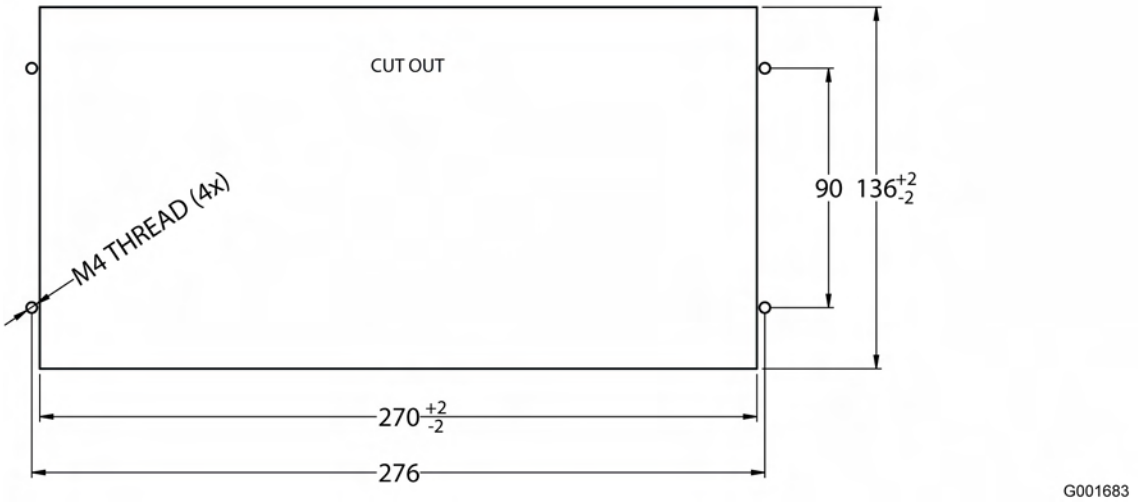

Repeater M 4.3

Part no see below

System: Salwico Cargo, Salwico Cruise, Salwico LNG, Salwico Offshore, Salwico Ro/Pax, Salwico Workboat, Salwico Yacht, Salwico Navy, OEM Extinguish

General Description

The Repeater M 4.3 is a repeater panel with a 4.3" graphical colour display used to indicate system status for fire alarms, faults and disablements.
Repeater M 4.3 can be mounted on any flat surface or flush mounted, independently from a fire alarm cabinet.
Repeater M 4.3 is equipped with communication buses for connecting to the system, and it provides the following features:

- A backlit 4.3" graphical colour display
- Alarm buzzer
- LED status indicators
- Backbone Bus / Extension Bus interface
- USB interface
- Two inputs and three outputs

Refer to the User Guide for more information on operating Repeater M 4.3.
For details on assembling a system and definitions of common system terms, refer to the Installation Manual.

Part No.

Repeater M 4.3 Marine	5100096-20A

Data

Operating voltage range	19-30 VDC
Current consumption (at 24V)	92 mA
Ingress protection	IP32
Operating temperature range	-5°C to +55°C
Weight	620 g
Display	4.3", 480×272 pixels, TFT
USB port	USB 1.1 Embedded Host
Input	24 VDC, digital
Output	24 VDC sinking, max. 40 mA
SD Memory	(Optional)
Certified according to	0845

Indicators

Refer to the User Guide for more information.

Connections

Connect the Repeater M 4.3 to BBE or to Extension Bus.

Note!
See figure below for connection alternatives; i.e. Connection board or Front panel rear.

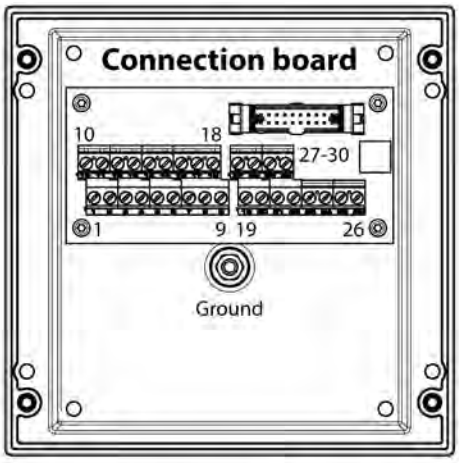

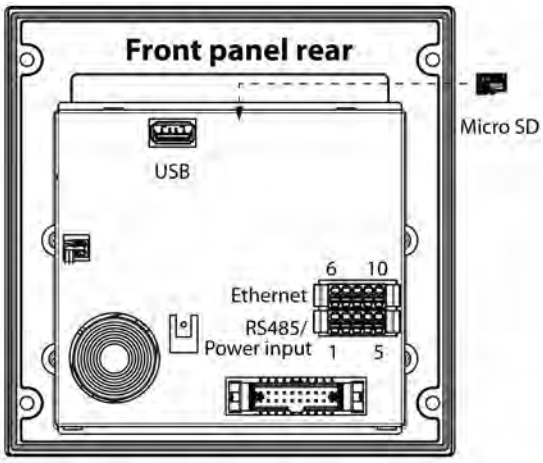

CONNECTION BOARD

			NMEA INPUT	B	30
			Not used	A	29
IN	2		INPUT	(24V) -	28
IN	2		INPUT	(24V) +	27
OUT	3		OUTPUT	24V 40mA -	26
OUT	3		OUTPUT	24V 40mA +	25
OUT	2		OUTPUT	24V 40mA -	24
OUT	2		OUTPUT	24V 40mA +	23
OUT	1		OUTPUT	24V 40mA -	22
OUT	1		OUTPUT	24V 40mA +	21
IN	1		INPUT	(24V) -	20
IN	1		INPUT	(24V) +	19
BBE, OUT			SIGNAL GROUND, BBE OUT	SG	18
BBE, OUT		2	POWER SUPPLY	V-	17
BBE, OUT		2	BBE2, OUT - 24VDC	V+	16
BBE, OUT		1	POWER SUPPLY	V-	15
BBE, OUT		1	BBE1, OUT - 24VDC	V+	14
BBE, OUT		2	BBE2	D-	13
BBE, OUT		2	OUT - RS485	D+	12
BBE, OUT		1	BBE1 / EXTENSION BUS	D-	11
BBE, OUT		1	OUT - RS485	D+	10
BBE, IN			SIGNAL GROUND, BBE IN	SG	9
BBE, IN		2	POWER SUPPLY	V-	8
BBE, IN		2	BBE2, IN - 24VDC	V+	7
BBE, IN		1	POWER SUPPLY	V-	6
BBE, IN		1	BBE1, IN - 24VDC	V+	5
BBE, IN		2	BBE2	D-	4
BBE, IN		2	IN - RS485	D+	3
BBE, IN		1	BBE1 / EXTENSION BUS	D-	2
BBE, IN		1	IN - RS485	D+	1

FRONT PANEL REAR

ETHERNET	ETHERNET Tx	Tx-	10
ETHERNET	Not used	Tx+	9
ETHERNET	ETHERNET Rx	Rx-	8
ETHERNET	Not used	Rx+	7
ETHERNET	GROUND, ETHERNET	G	6
RS485	POWER INPUT	V+	5
RS485	24VDC	V-	4
RS485	EXTENSION BUS	D+	3
RS485	RS485	D-	2
RS485	SIGNAL GROUND, RS485	SG	1

G002889

BBE = Backbone Bus External

RS485 Termination

For RS485 Termination the built-in terminator (120 ohm) can be activated with the RS485 DIP switch located on the rear of the front panel.
For recommendations and examples on RS485 Termination, refer to the Installation Manual.

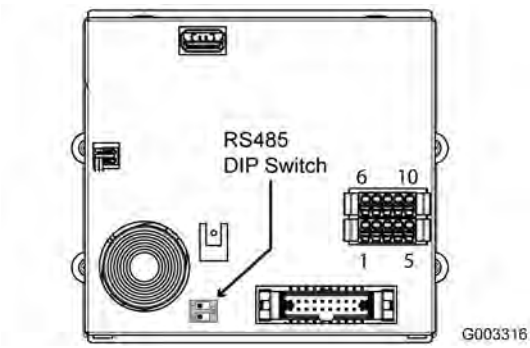

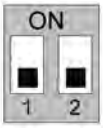

Table 1. DIP switch for RS485 Termination

DIP Switch No.	Description	ON	OFF
1	BBE1	Active	Deactivated
2	BBE2	Active	Deactivated

Addressing

1 Press both arrow keys + to open the Enter Access Code menu.
Approximate 4-5 seconds.

1.1 Use the arrow keys to scroll and select the digits for the Access Code.

1.2 Confirm with the Local Mute button (= Next digit or Enter).
(= Previous.)

2 Proceed to choose address and layout for the Repeater module:
- Enter Central Address
- Enter Module Address
- Enter Layout

2.1 Reboot the Repeater module (it will take the module about 20 seconds to restart).

2.2 For all menu alternatives use the arrow keys to scroll and select.
Confirm with the Local Mute button.

2.3 Follow the instructions on the lower part of the screen.

Module Dimensions (mm)

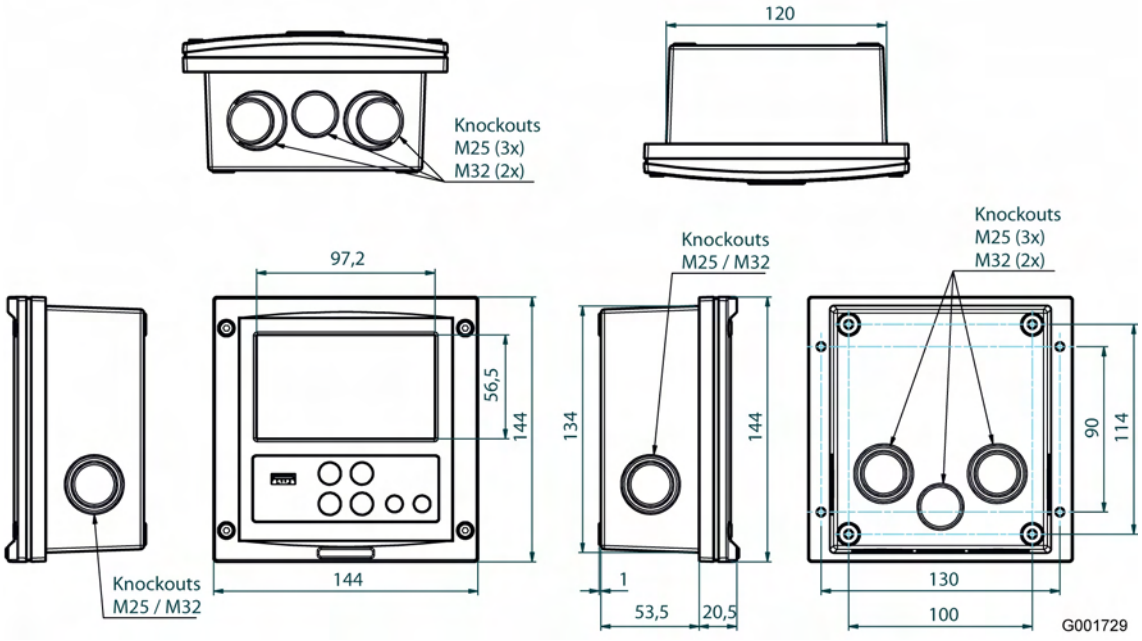

Mounting Dimensions (mm)

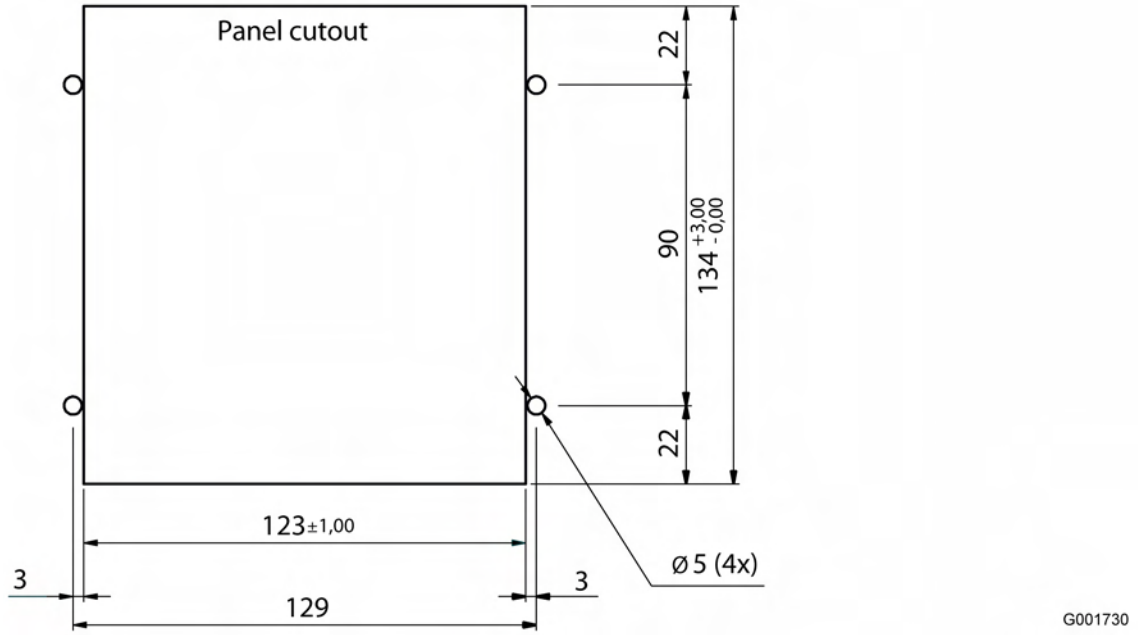

Heat Detector
Salwico EV-H/A1R 54°C

Part no. 040000

System: CS3000, CS4000, NSAC-1, Salwico Cargo, Salwico Cruise, Salwico LNG, Salwico Offshore, Salwico Ro/Pax, Salwico Workboat, Salwico Yacht, Salwico Navy, OEM Extinguish

General Description

Salwico EV-H is an analogue addressable heat detector.

Salwico EV-H is designed to give early warning for the presence of heat in the supervised area, and is available in two temperature classes: A1R (fixed 54°C + rate of rise function according to EN54-5) and CS (fixed 84°C), see separate part no. for 84°C.

Salwico EV-H is equipped with OMNIVIEW 360° LED indicator giving a clear, full 360° visibility of the red alarm indication.

For use in harsh harsh environments, use the IP67 variant of EV-H. See separate document "Base matrix Salwico units" for information about suitable base plate.

The technical detector address is set with a special programming tool. Valid addresses are 1-254.

Salwico EV-H is equipped with an output for remote indication.

For detailed information about appropriate systems for the detector, see separate document "Compatibility of Loop Units/System".

Data

Function	Heat, thermistor 54°C (also available in 84°C version)
Nominal voltage	24 VDC
Working voltage	20-37 VDC
Working current	0.2 mA
Alarm current	5 mA
Remote indication	Max 3 mA
Ingress protection	Depends on base
Cable terminals	Depends on base
Temperature range	-25°C to +70°C
Air humidity	0-95% RH
Material	PC/ABS
Colour	White
Weight (w/o base)	~120 g
Programming tool	Part no. 5200123-00A
Certified according to	0832 08327/yy yy = year of production

Dimensions (mm)

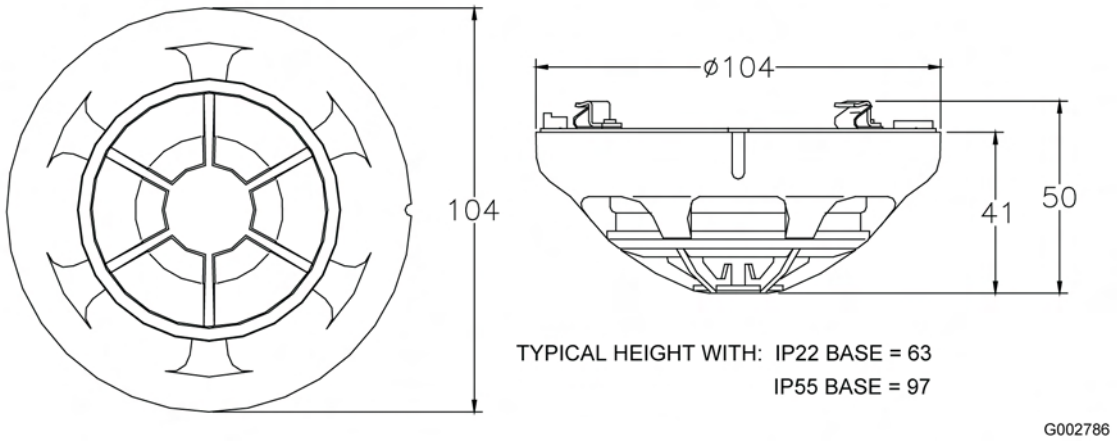

Connection

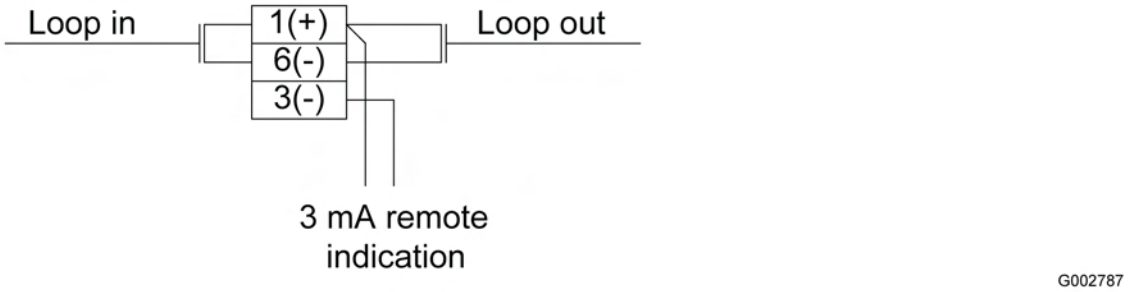

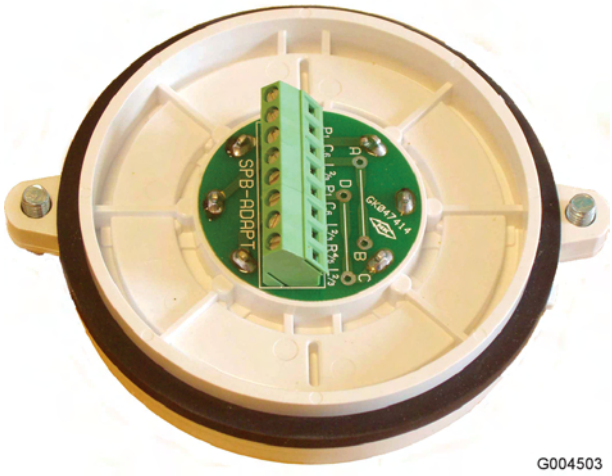

G004503

Base Adapter
Salwico SPB-ADAPT

Part no. 046916

System: All Salwico Fire Alarm Systems

General Description

SPB-ADAPT is an adapter for the bases 2IP55 (part. no. 046950) and NS-2IP55 (part no. 046900).

SPB-ADAPT is developed to replace the adapters SPB-1 (part no. 046915) and NS-ADAPT (part no. N1421).

Smoke, heat and flame detectors can be connected to this adapter. For more information about suitable bases, see separate document "Base matrix".

The adapter can be used for all Salwico fire alarm systems.

Dimensions (mm)

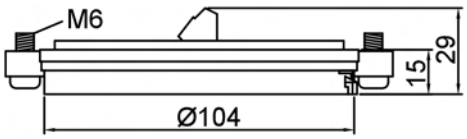

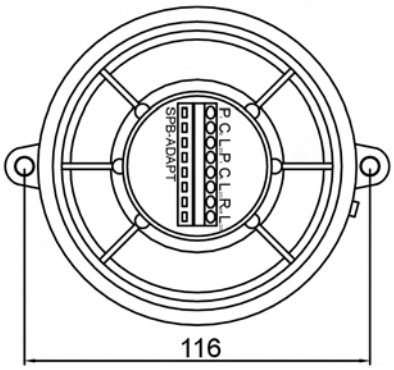

G004504

Data

Table 1. Title

Cable terminals	2.5 mm^2
Ingress protection	IP55 (mounted on a base)
Material	PC/ABS
Colour	White
Weight	~110 g

Connection

Connection of addressable detectors IA, OA, TDT and EV-PP series:

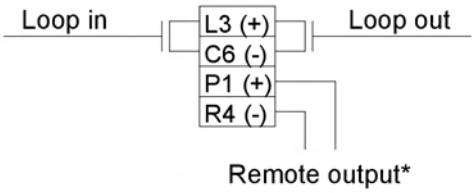

G003132

Connection of addressable detectors NS, CN and EV-series** (EV-PP excluded):

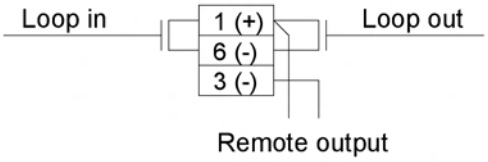

G003133

Connection of conventional detectors DIS3, DOS3, HC100,NS-DIR and NS-DUV:

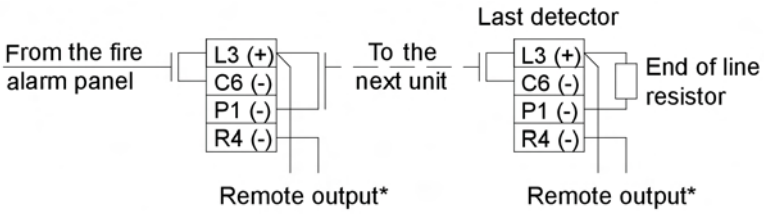

G003134

Connection of conventional flame detectors EVC-IR (not NS-DIR or NS-DUV):

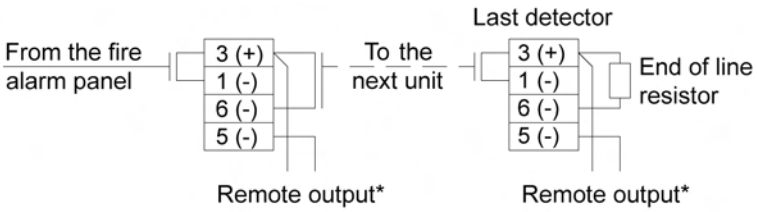

G003135

* All types of detectors do not have the remote output. Please refer to the data sheet for the detector in question.

** For loop units with short circuit isolators, see connection on data sheet for that unit.

Detector Base
Salwico 2IP55

Part no. 046950

G003843

System: All Salwico fire alarm systems

General Description

The 2IP55 is a base for all Salwico IP55 detector adapters.

Together with the adapters it is possible to install smoke, heat and flame detectors in harsh environment with an ingress protection up to IP55. It can be used for both addressable and conventional fire alarm systems.

Data

Cable diameter	Ø8-13 mm
Ingress protection	IP55
Fire class	V1
Temperature range	-30°C to +100°C
Material	Polyamide/glass (PA666, 15% GW)
Colour	White
Weight	~100 g

Dimensions (mm)

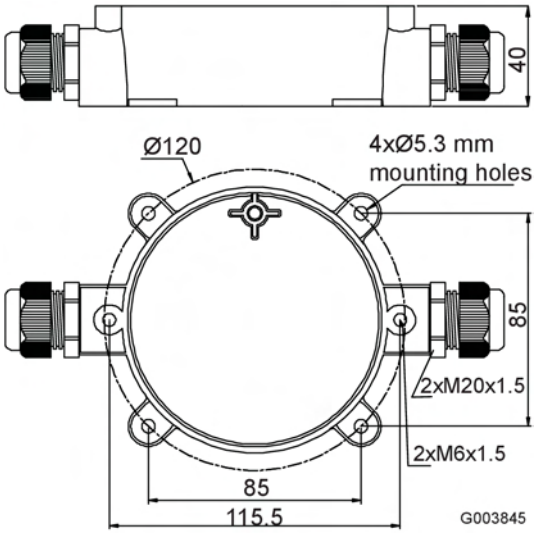

Heat Detector
Salwico EV-H/CS 84°C

Part no. 040005

System: CS3000, CS4000, NSAC-1, Salwico Cargo, Salwico Cruise, Salwico LNG, Salwico Offshore, Salwico Ro/Pax, Salwico Workboat, Salwico Yacht, Salwico Navy, OEM Extinguish

General Description

Salwico EV-H is an analogue addressable heat detector.

Salwico EV-H is designed to give early warning for the presence of heat in the supervised area, and is available in two temperature classes: CS (fixed 84°C) and A1R (fixed 54°C + rate of rise 0.8°C/min), see separate part no. for 54°C.

Salwico EV-H is equipped with OMNIVIEW 360° LED indicator giving a clear, full 360° visibility of the red alarm indication.

For use in harsh harsh environments, use the IP67 variant of EV-H. See separate document "Base matrix Salwico units" for information about suitable base plate.

The technical detector address is set with a special programming tool. Valid addresses are 1-254.

Salwico EV-H is equipped with an output for remote indication.

For detailed information about appropriate systems for the detector, see separate document "Compatibility of Loop Units/System".

Data

Function	Heat, thermistor 84°C (also available in 54°C version)
Nominal voltage	24 VDC
Working voltage	20-37 VDC
Working current	0.2 mA
Alarm current	5 mA
Remote indication	Max 3 mA
Ingress protection	Depends on base
Cable terminals	Depends on base
Temperature range	-25°C to +70°C
Air humidity	0-95% RH
Material	PC/ABS
Colour	White
Weight (w/o base)	~120 g
Programming tool	Part no. 5200123-00A
Certified according to	0832/yy yy = year of production

Dimensions (mm)

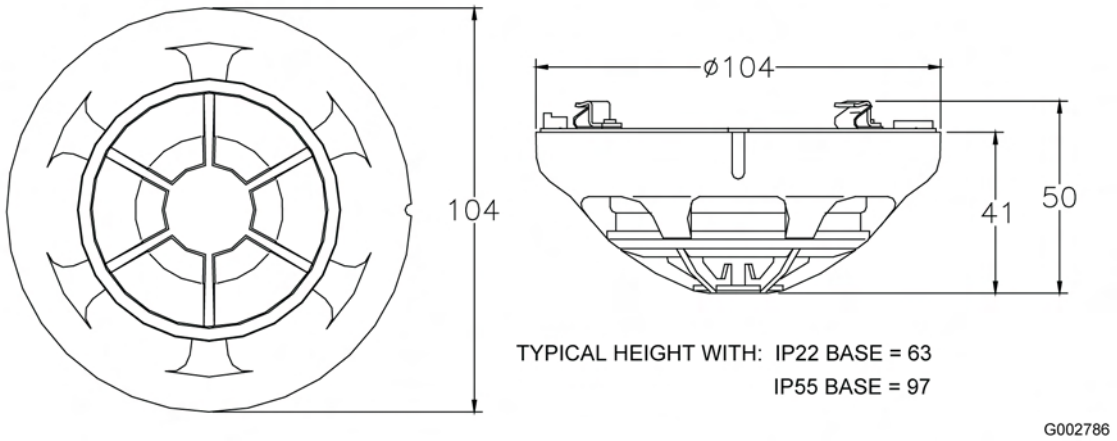

Connection

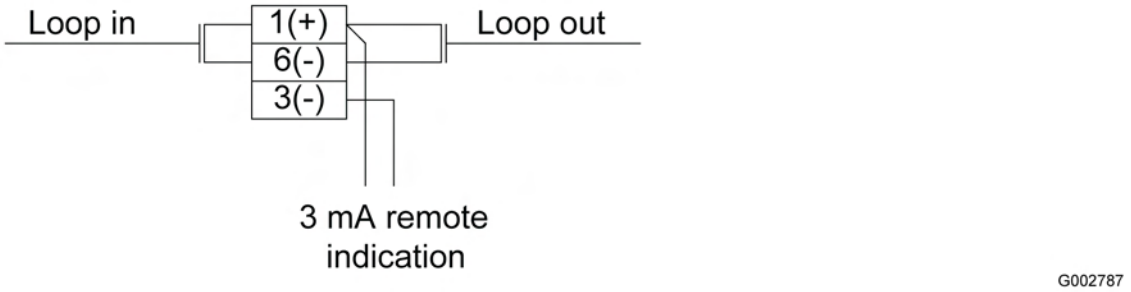

Optical Smoke Detector
Salwico EV-P

Part no 040020

System: CS3000, CS4000, NSAC-1, Salwico Cargo, Salwico Cruise, Salwico LNG, Salwico Offshore, Salwico Ro/Pax, Salwico Workboat, Salwico Yacht, Salwico Navy, OEM Extinguish

General Description

Salwico EV-P is an analogue addressable smoke detector with an optical chamber.
Salwico EV-P is designed to give early warning for the presence of smoke in the supervised area. At the same time the detector offers a high protection against unwanted alarms.
Salwico EV-P is equipped with OMNIVIEW 360° LED indicator giving a clear, full 360° visibility of the red alarm indication.
The detector can be placed in harsh environments if it is mounted on a splash proof base. See separate document "Base matrix Salwico units" for information about suitable base plate.
The technical detector address is set with a special programming tool. Valid addresses are 1-254.
Salwico EV-P has a fine pitch net which improves the response to smoke and also reduces the amount of dust etc entering the detector.
Salwico EV-P is equipped with an output for remote indication.

Data

Function	Analogue, addressable, scattering light
Nominal voltage	24 VDC
Working voltage	20-37 VDC
Working current	0.2 mA
Alarm current	5 mA
Remote indication	Max 3 mA
Ingress protection	Depends on base
Cable terminals	Depends on base
Temperature range	-25°C to +70°C
Air humidity	0-95% RH
Material	PC/ABS
Colour	White
Weight (w/o base)	~120 g
Programming tool	Part no. 040300
Certified according to	0832

Note!
Do not remove the dust cover from the detector until all polluting (dusty) activities are finished and the area has been cleaned.

Dimensions (mm)

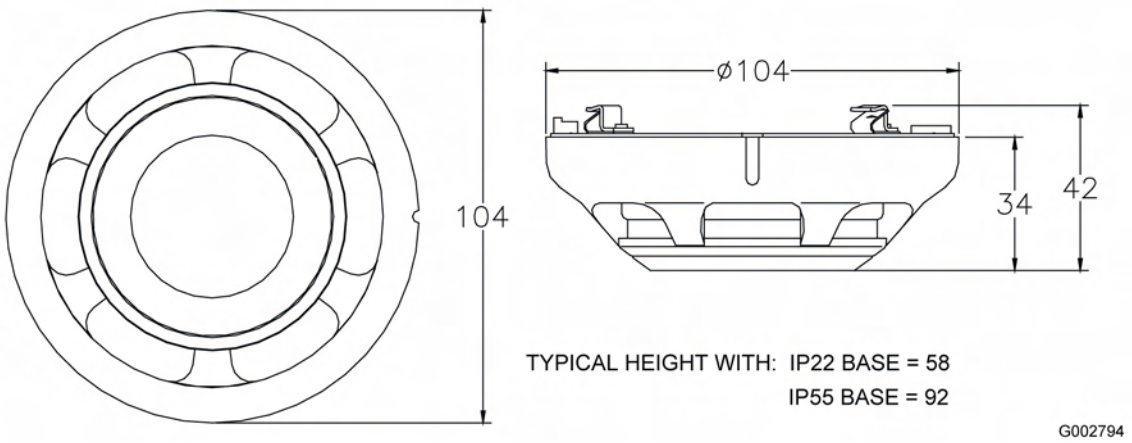

Connection

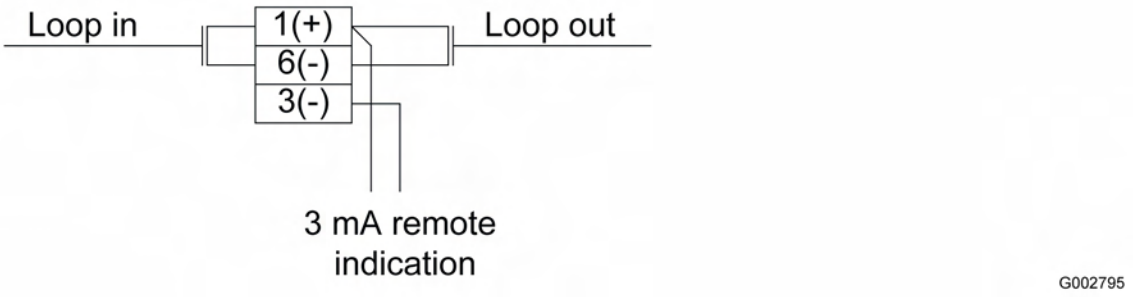

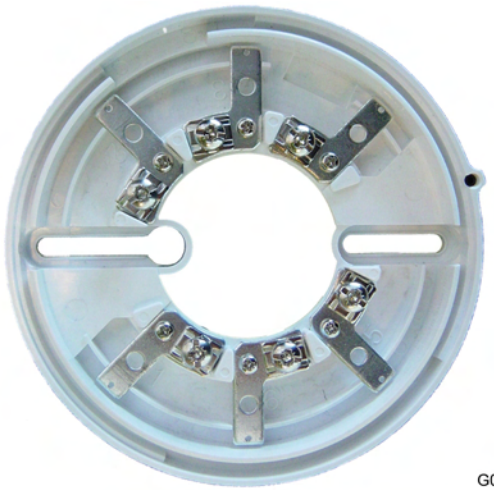

G003115

Base Plate
Salwico UB-6

Part no. 044445

System: All Salwico Fire Alarm Systems

General Description

UB-6 is a low profile base plate for smoke, heat and flame detectors.

UB-6 is developed to replace the following bases:

- UB-1
- UB-2
- UB-5
- NS-BNCL

Please see separate document "Base Matrix" for information about suitable bases for detectors.

The base plate is made for use in dry and clean spaces, and it can be used for both addressable and conventional fire alarm systems. Some detectors might require special bases.

The cable entry is from the centre or from the side of the base.

Dimensions (mm)

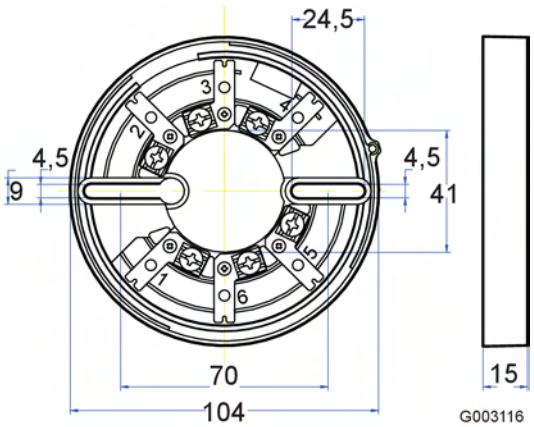

UB-6 is prepared for SUM-2 assembly. Detectors in the CN, EV and EVC series can be locked to the base using a 1,5 mm hexagon key.

NOTE!
Consilium requires minimum 2x0.5mm^2 unshield twisted pair cable for the loop units.

Data

Ingress protection	IP22
Material	PC/ABS
Colour	Signal white, RAL 9003
Weight	~65 g

Connection

Connection of addressable detectors IA, OA, TDT and EV-PP series:

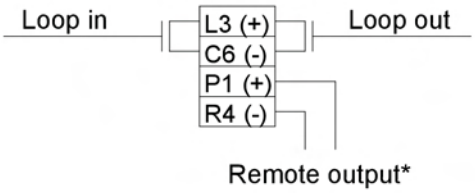

G003132

Connection of addressable detectors NS, CN and EV-series** (EV-PP excluded):

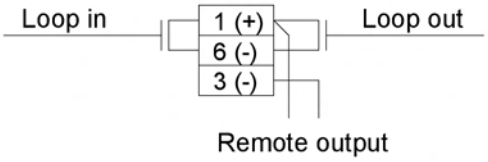

G003133

Connection of conventional detectors DIS3, DOS3, HC100,NS-DIR and NS-DUV:

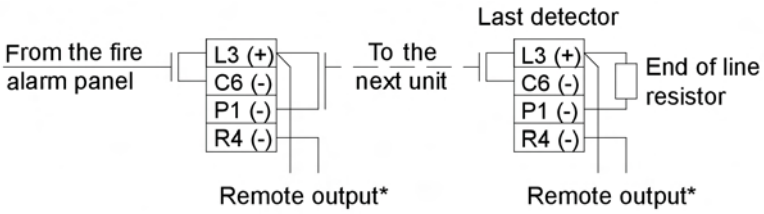

G003134

Connection of conventional flame detectors EVC-IR (not NS-DIR or NS-DUV):

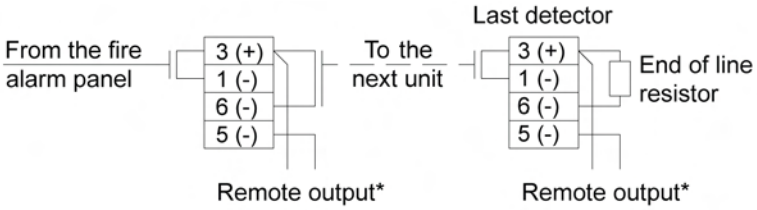

G003135

* All types of detectors do not have the remote output. Please refer to the data sheet for the detector in question.

** For loop units with short circuit isolators, see connection on data sheet for that unit.

IS optical smoke/heat detector

Salwico NS-AOHS-IS

Part no. N11250

System: Salwico CS3000*, CS4000, NSAC-1 fire alarm system

Description

NS-AOHS-IS is an intrinsically safe analogue addressable multi sensor detector for Salwico fire alarm systems.

It has two separate analogue sensor elements. One optical for smoke detection and one heat-sensing element for heat detection.

Alarm condition is indicated on the detector via a red LED. The LED is lit until the alarm has been reset on the control panel.

The address is set with a DIP switch, which is mounted on the backside of the detector.

NS-AOHS-IS is connected to the detector loop via the ISOLATOR-A, part. no. N1790. Up to 20 addressable IS units can be connected to one ISOLATOR-A.

It is not possible to connect any remote LED indicator to NS-AOHS-IS.

Safety data

Max input voltage (U_i)	28 VDC
Max input current (I_i)	93.3 mA
Max input power (P_i)	0.66 W
Max internal capacitance (C_i)	1 nF
Max internal inductance (Li)	Negligible
Responsible manufacturer	Consilium Fire & Gas, www.consilium.se

Only clean outside of detector by using a damp cloth.

Data

Smoke sensing method	Light scattering type Infra-red
Nominal voltage	24 VDC
Working voltage	15–28 VDC
Working current	0.2 mA
Alarm current	2.5 mA
Alarm temperature	84°C
Temperature range	-25°C to +70°C
Ambient humidity	0-95% RH, non-condensing
Ex class	Ex II 1G EEx ia II C T5 T_a: 70°C
Cert. NEMKO	05ATEX1136X
CE	CE0470
Colour	White
Weight	~100 g (head only) ~340 g complete with ADAPTER AOHS-IS and base 2IP55

It is important only to use the special base adapter ADAPTER AOHS-IS part. no. N1430 together with a suitable base. For information about suitable bases, see separate document “Base matrix Salwico units”.

* SPK-2 for NOSE based detectors.

Dimensions (mm)

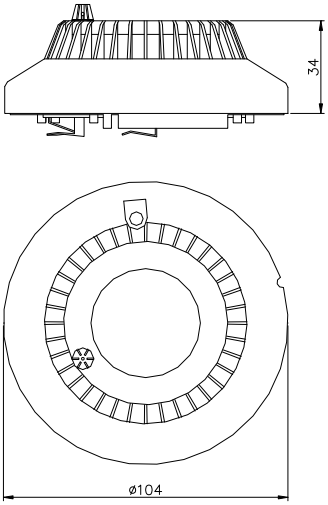

Connection

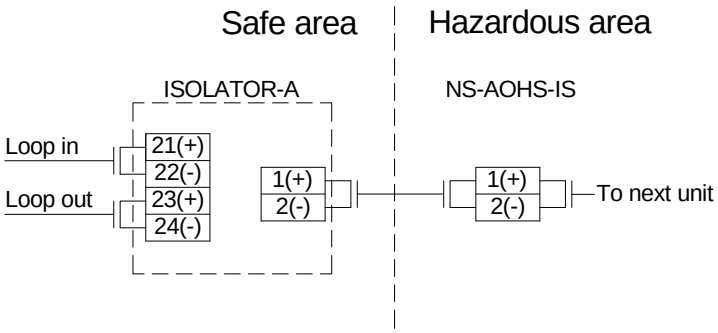

Consilium Marine AB
P.O. Box 8763, SE-402 76 Göteborg
Phone +46 31 7107700 Fax +46 31 7107800
www.consilium.se

IP55 IS adapter

Salwico ADAPTER AOHS-IS

Part no. N1430

System: Salwico CS3000, CS4000 and NSAC-1 fire alarms

Description

The ADAPTER AOHS-IS is an adapter for IP55 detector bases.
Only detector AOHS-IS can be connected to this adapter.
The adapter can be used for Salwico addressable fire alarm systems CS3000, CS4000 and NSAC-1.
The ADAPTER AOHS-IS has an IS-label on the side.
NB! The classification society might have additional installation requirements than what is mentioned in this data sheet.

Data

Cable terminals	2.5 mm^2
Ingress protection	IP55 (mounted on an IP55 base)
Colour	White
Weight	~105 g

Detector bases

For information about suitable detector bases, see the separate document ”Base matrix Salwico units”.

Dimensions (mm)

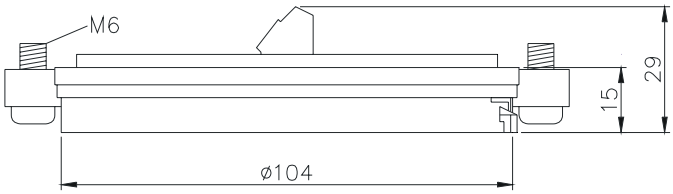

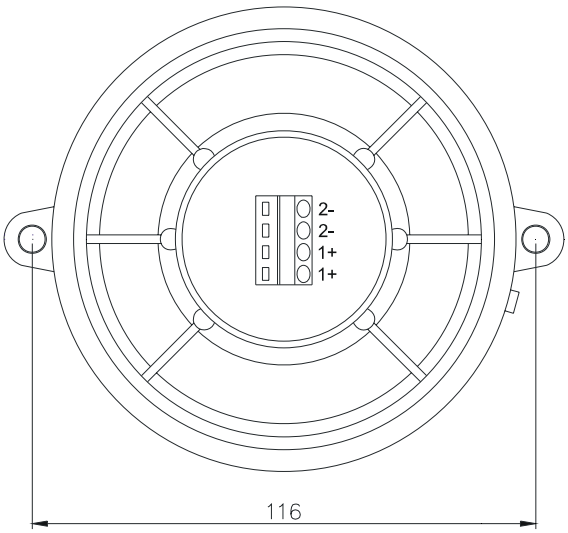

Connection

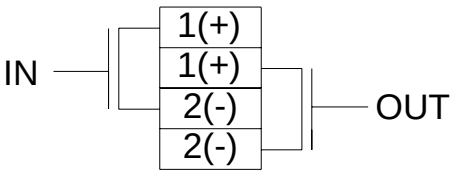

Consilium
Consilium Marine AB
P.O. Box 8763, SE-402 76 Göteborg, Sweden
Phone +46 31 710 77 00 Fax +46 31 710 78 00
www.consilium.se

Intrinsically safe manual call point IP67

Salwico ACP-IS

Part no. 60060-001010

System: Salwico CS3000*, CS4000 and NSAC-1 Fire Alarm

Description

ACP-IS is an intrinsically safe addressable manual call point for the fire alarm systems CS3000, CS4000 and NSAC-1.

ACP-IS is connected to the detector loop via ISOLATOR-A. Up to 20 addressable IS units can be connected to an ISOLATOR-A.

Pressing the glass causing it to crack activates the fire alarm. The call point can also be tested with a special key, included in the delivery.

A red LED on the front of the call point indicates the fire alarm. The LED remains lit until the glass has been replaced and the fire alarm has been reset on the control panel.

The address of the call point is set with a DIP-switch.

Clean the manual call point by using a damp cloth.

Safety Data

Maximum input voltage (U_i)	28 VDC
Maximum permissible current (I_i)	93 mA
Maximum permissible power (P_i)	651 mW
Maximum internal capacitance (C_i)	33 pF
Maximum internal inductance (L_i)	Negligible
Responsible manufacturer	Consilium Fire & Gas, www.consilium.se

Clean the manual call point by using a damp cloth.

Data

Operating voltage	15–28 VDC
Normal current	0.2 mA
Ambient humidity	0 to 95%RH
Temperature range	–25°C to +50°C
Ex class	Ⓔ II 1G EEx ai II C T5 T_a 50°C
Cert. NEMKO	04ATEX1246X
CE	CE0470
Ingress protection	IP67
Cable diameter	4–12 mm
Cable terminals	max 2.5 mm^2
Material	PC/ABS
Colour	Red
Weight	~365 g
Spare glasses (10 pcs)	Part no N1311
Insulation	More than 500V r.m.s. a.c. between IS circuit and frame.

*SPK-2 for NOSE based detectors

Test & dimensions (mm)

The call point can easily be tested by inserting the test key that is included with each call point.

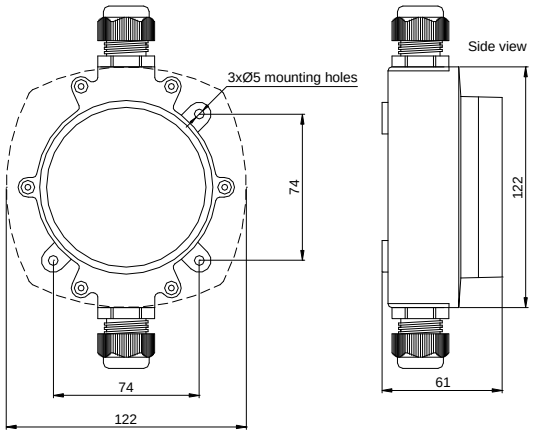

Connection

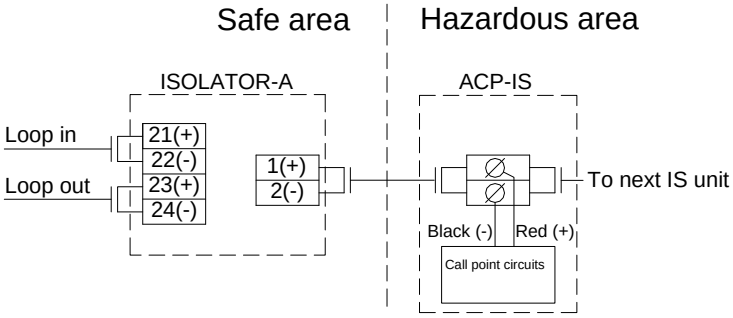

Consilium Marine AB
P.O. Box 8763, SE-402 76 Göteborg
Phone +46 31 7107700 Fax +46 31 7107800
www.consilium.se

Intrinsically safe isolator
Salwico ISOLATOR-A

Part no. N1790

System: CS3000*, CS4000, NSAC-1, Salwico Cargo, Salwico Cruise, Salwico LNG, Salwico Offshore, Salwico Ro/Pax, Salwico Workboat, Salwico Yacht, Salwico Navy and OEM Extinguish.

Description

ISOLATOR-A is an IS isolator intended for use together with Salwico intrinsically safe addressable detectors and manual call points. It contains an IS-isolator and a LISA-2 connection board.

ISOLATOR-A is located in a non-hazardous area (safe area) and forming the interface to IS detectors and other IS line units.

To each addressable detector loop a maximum of five ISOLATOR-A units can be connected, each of them accommodating up to 20 IS line units.

ISOLATOR-A does not need a separate power supply or earth connection. It is powered directly from the fire alarm panel via the loop cable, which means that no extra cables are needed.

The cable glands shall be mounted acc. to the dimension drawing on page two. This will guarantee the minimum required distance (50mm) between the intrinsic safe and the non intrinsic safe conductors. The conductors shall be as short as possible between the entrance and the terminals and shall not cross from one side to another.

The connection board LISA-2 simplifies installation and replacement by offering a connection solution without breaking the fire alarm loop.

The resistor mounted on the ISOLATOR output should not be removed.

Data, Isolator A

Operating input V	27-38VDC
Working input V	35VDC
Max output V	25VDC
Approval	EEx ia
Cable terminals	2.5 mm^2
Ambient temperature	-20ºC to +60ºC
Ambient humidity	0-100% RH (when mounted in box)
Weight	~100 g (isolator)
ELR	10kΩ (for load only)

Data, enclosure

Ingress protection	IP55
Cable glands	Ø8-14 mm
Material	Polystyrol
Colour	Grey, Blue
Weight	~700 g (incl. internal components)

Spares

Part. No.	Type
46492	Pepprl + Fuchs KFD0-CS-Ex1.54
5200094-00A	LISA-2 connection board

*SPK-2 for NOSE based detectors

Connection

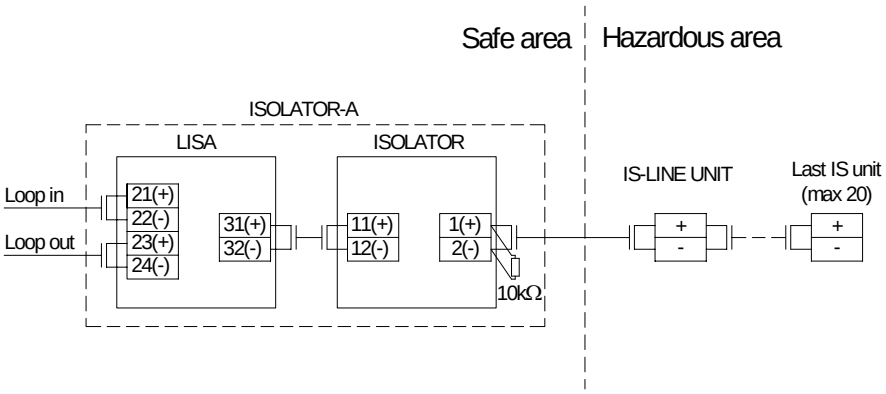

Consilium Marine & Safety AB
P.O. Box 8763, SE-402 76 Göteborg
Phone +46 31 7107700 Fax +46 31 7107800
www.consilium.se

Intrinsically safe isolator
Salwico ISOLATOR-A

Dimensions (mm)

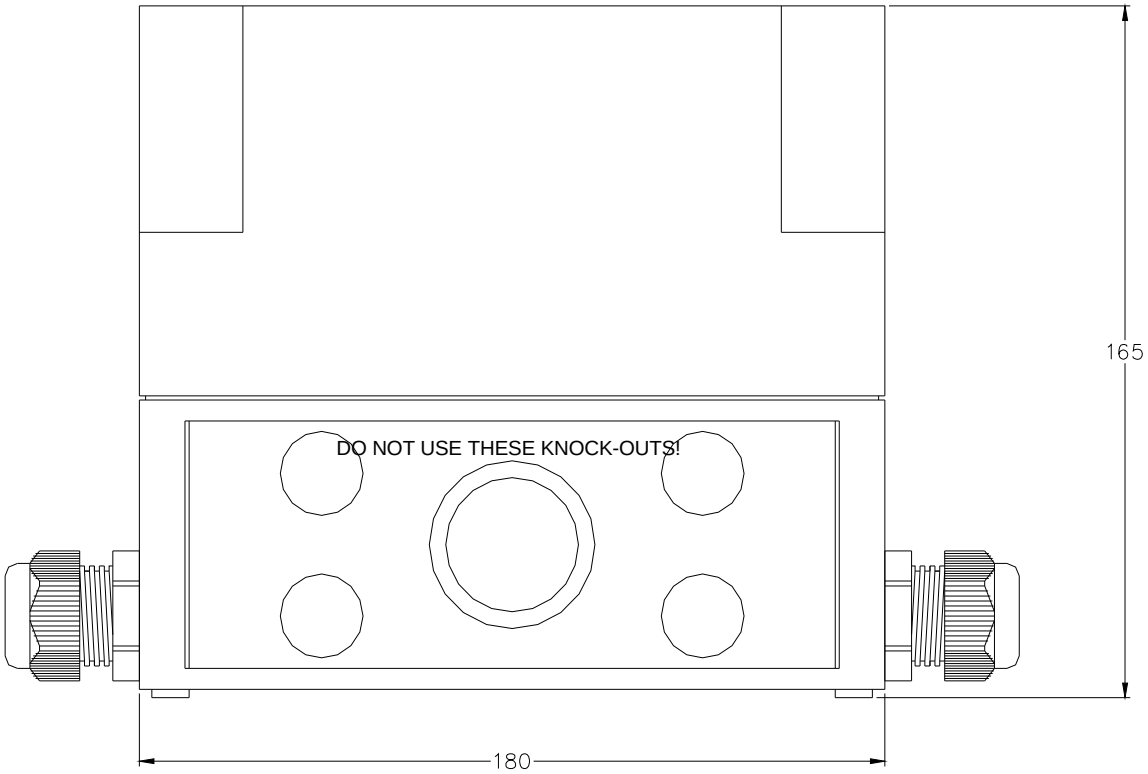

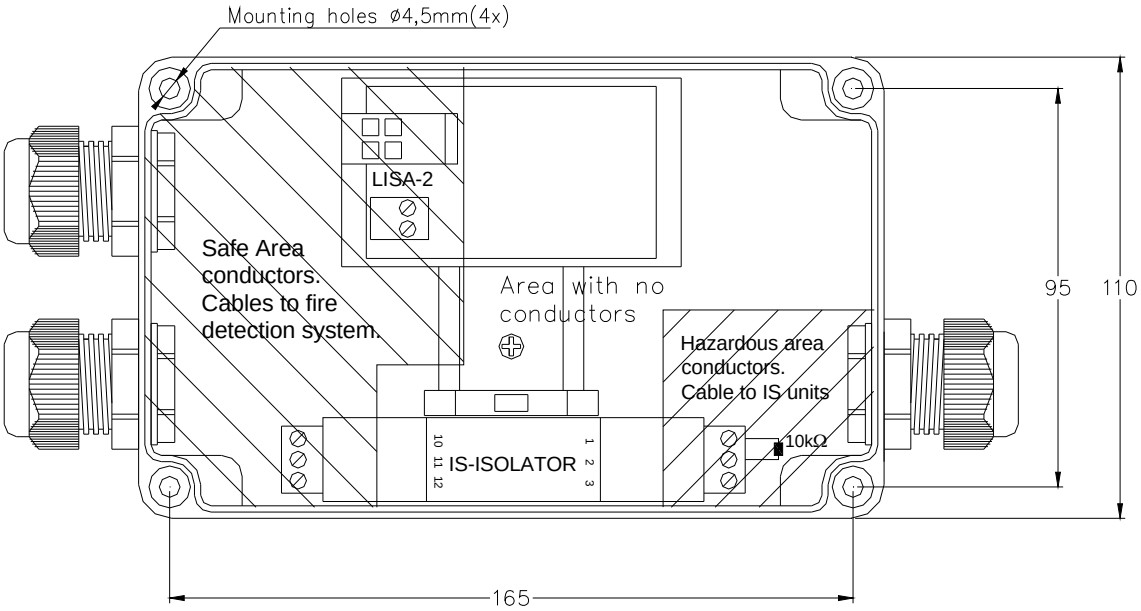

Consilium Marine & Safety AB
P.O. Box 8763, SE-402 76 Göteborg
Phone +46 31 7107700 Fax +46 31 7107800
www.consilium.se

Addressable/Conventional IR Flame Detector

Salwico AC-IR-3Fq

Part no. 5200236-00A

System: Depends on base. See Datasheet for: 5200235-00A Salwico AC-IR-3Fq Conventional Base and 5200237-00A Salwico AC-IR-3Fq Addressable Base

General Description

The AC-IR-3Fq is a triple frequency conventional infrared flame detector produced using the latest in manufacturing technology. It is supplied with an array of advanced features, making it 'better by design'.

The Detector is using infrared elements suitable for the detection of smokeless combustible liquid and gas fires, as well as smoke-forming open fire involving carbonaceous materials as contained in wood, plastics, gases, oil products etc.

The Fire evaluation process is done by triple Infrared (3Fq) sensor, protected by a sapphire glass filtering >6.0µm wavelength radiation.

Sensor measures the hot carbon dioxide in a specific flame wavelength; the B and C sensors simultaneously measure the interference radiation in near wavelengths.

This technique together with intelligent signal processing through microprocessor and custom algorithms, achieves excellent detection reliability while maintaining the highest immunity to interference radiation and sunlight.

Testing

For functional test, use Salwico IR Test lamp, part no. 001156. Due to the detectors high immunity to unwanted alarms, it is difficult to test the detector without the IR test lamp.

Features

- Triple Frequency IR Detector
- Low current draw
- Suitable for installation in damp environment
- Easy Maintenance
- Remote LED Option
- Approved to UNI EN54-10 Ed. 2002

Data

Electrical Specifications

Operating Voltage Range	24 V DC
Supply Voltage	24 V DC
Max Current (Normal)	450 µA
Max Current Detector	700 µA (Alarm)
Addressable Mode	1 mA (Alarm incl. Base)
Conventional Mode	30 mA (Alarm Incl. Base)

Environmental Specifications

Application Temperature Range	-25 °C to +75 °C
Humidity	Up to 95%

Mechanical Information

Height	69 mm (including base)
Diameter	103 mm
Weight	250 g
Weight with IP65 Base	380 g
Wire Gauge for Terminals	2.5 mm^2
Colour	White RAL9010
Material	Polycarbonate Flame Retarded Cl. UL94V0
IP Rating	IP65 (IP67 with locking screws)
Certified according to	0474/yy yy = year of production

Detector Base

5200235-00A Salwico AC-IR-3Fq Conventional Base

5200237-00A Salwico AC-IR-3Fq Addressable Base

Test Equipment

001156 Salwico IR Test lamp

Installation

For featured wiring the detector is installed on a base, provided in IP65 proof version.

The detector is connected to the base through a fast bayonet clutching and a flying connector.

Certain factors need to be considered when designing an installation:

1. The sensors should be mounted so that objects do not block their field-of-view (FOV). This includes glass, Plexiglas and other visibly transparent materials. Contact Consilium for more information.
2. Whenever possible, sensors should be mounted so their ranges and fields-of-view overlap.
3. Sensors should be mounted so their FOV cannot be choppered by moving machinery or human operators during normal operations within the area. Therefore they should be installed as high as possible or on the ceiling.
4. Detector window should not be exposed to hot or cold intermittent airflow which could change the temperature of the detector itself or detector FOV background.
5. To ensure optimum sensitivity and performance, sensors should be mounted so they do not look at hot surfaces: if this is necessary first follow procedure of paragraph 3 and ensure no chopper is present.
6. The sensors should be mounted so that they are easily and safely accessible for inspection and maintenance.
7. If mechanical, high-temperature damage, or window contamination is likely to occur in the installed location, then the sensor should be protected. However the protection method cannot obstruct the sensors FOV with any material, including visibly transparent materials, such as glass and Plexiglas.
8. The sensor can be mounted in any orientation, as long as captive screws are removed or can be removed.
9. Mounting the sensor so that it points downwards is recommended as this generally results in minimal window contamination.
10. Care must be taken to avoid that sensor installation exceeds environmental approvals such as temperature, shocks, vibrations.
11. Care must be taken to avoid that sensor installation exceeds electromagnetic interference approval: in particular install detectors in places out-of-reach of personnel (including contractors and crew members).
12. It is important NOT to leave any extra cable slack when installing this detector.
13. Cable shield shall be connected to the ground on one side only.

For outdoor mounting: Fit the detector screws on the base to ensure IP67 Protection Index.

Angle of Reception

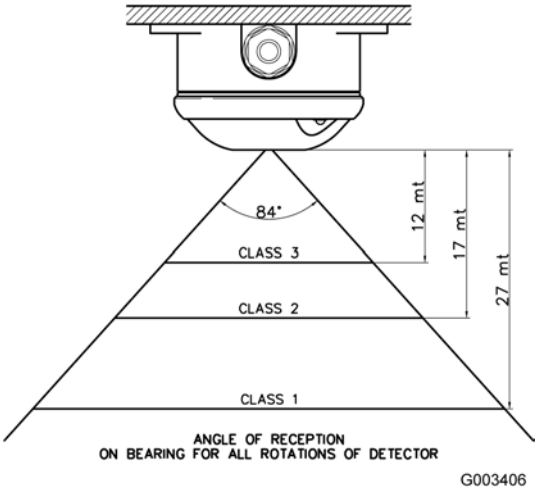

Dimensions (mm)

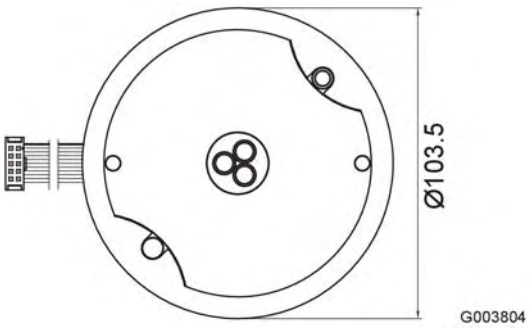

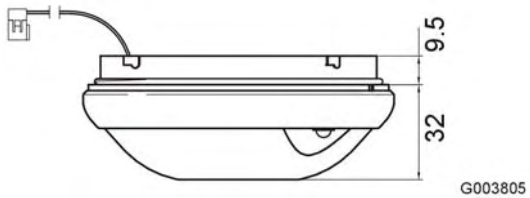

Settings

S1 DIP-Switch setup

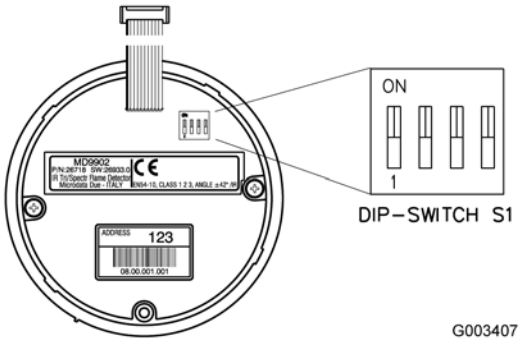

Figure 1. DIP-Switch Setting.

Use the 4-ways Dip-switch S1 to set the detector as Conventional or Addressable and preset sensitivity threshold (Class):

Table . DIP-Switch Setting

Sensitivity class	Sw.No.1	Sw.No.2	Sensitivity
Class 1	OFF	ON	High up to 27 m
Class 2	ON	OFF	Medium up to 17 m
Class 3*	OFF	OFF	Low up to 12 m

Table . Conventional Mode

Mode	Sw.No.3	Sw.No.4
Conventional	ON	ON

Table . Addressable Mode

Mode	Sw.No.3	Sw.No.4
Addressable*	OFF	OFF

* Default factory setting

Addressable Base for IR Flame Detector

Salwico AC-IR-3Fq Addr Base

Part no. 5200237-00A

System: CS3000, CS3004, CS4000, NSAC-1*, Salwico Cargo, Salwico Cruise, Salwico LNG, Salwico Offshore, Salwico Ro/Pax, Salwico Workboat, Salwico Yacht, Salwico Navy, OEM Extinguish. * Requires LC1 R6 SW v.2.61.34 or later

General Description

AC-IR-3Fq Addressable Base is suitable for installation of AC-IR-3Fq Detector in a harsh environment. The base plate provides ingress protection up to IP67, when lock screws are used.

The base provides a termination possibility, for detector set in Addressable mode. The address is set by an 8-way DIP-switch.

Features

- IP65/IP67 Ingress protection
- Low current draw
- Suitable for installation in harsh environment

Data

Electrical Specifications

Supply Voltage	19-38 VDC
Working current	Max 0.6 mA
Alarm current	Max 1 mA (Including detector)
Remote output max	N.A.

Environmental Specifications

Application Temperature Range	-25°C to +75°C
Humidity	Up to 95%
IP Rating	IP65 (IP67 w/locking screws)

Mechanical Information

W x L x H	130 x 110 x 37,5 mm
Diameter	100 mm
Weight	130 g +/- 10
Wire Gauge for terminal	0.75÷2.5 mm^2
Colour	White RAL9010

Mechanical Information

Material	PCB Flame Ret. Class: CL UL94V0
Certified according to	0474/yy yy = year of production

Detector

5200236-00A Salwico AC-IR-3Fq

Switch Settings

SW1 - Address Switch

The address is set by an 8-way DIP-switch

SW2 - Setting Switch

DIP No.	Default Setting	Explanation
1	OFF	IR-Detector
2	OFF	Not used
3	OFF	Not used
4	OFF	Not used
5	ON	SCI (Short Circuit Isolator) disabled

Dimensions (mm)

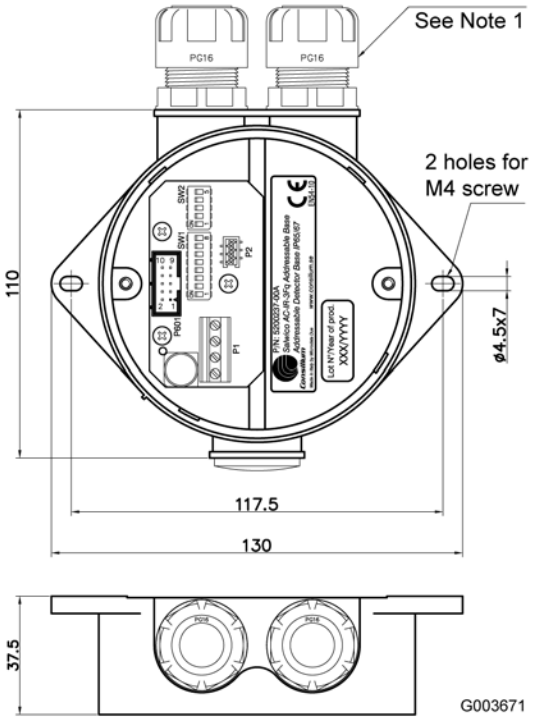

Note 1: PG16 Cable-glands & stop-end are supplied in kit with base.

Flame Detector DIP-switch settings

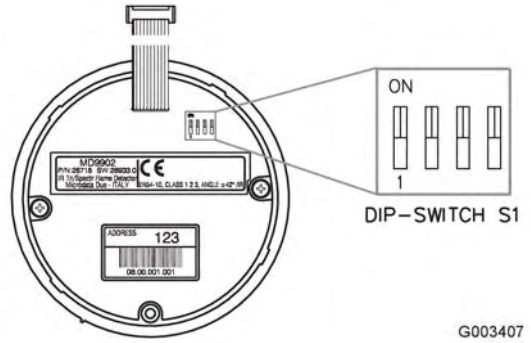

Figure 1. AC-IR-3Fq Flame detector setting S1-DIP-Switch

Mode	Sw.No.3	Sw.No.4
Addressable*	OFF	OFF

*Default factory setting

Connection

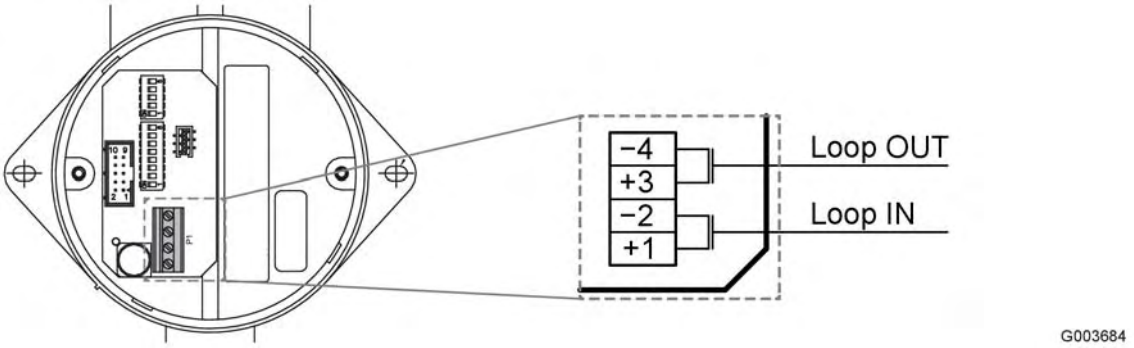

Manual Call Point
Salwico MCP-A (GB)

Part no. 5200030-01A

System: Salwico Cargo, Salwico Cruise, Salwico Workboat, Salwico Yacht, Salwico RoPax, CS3000, CS3004, CS4000

General Description

MCP-A is an addressable manual call point for indoor environment, designed for the Salwico addressable fire alarm systems.

Pressing the glass causing it to crack activates the fire alarm. A protective plastic coating on the glass prevents operator injury.

An LED on the front of the call point indicates the fire alarm. The LED remains lit until the fire alarm has been reset on the fire alarm panel.

The call point can be tested with a special key, included in the delivery.

The address of the call point is set with a DIP-switch.

The MCP-A provides short-circuit protection via connections 1–4 and no short-circuit protection via connections 5–8.

In order to achieve IP23 the MCP-A shall be mounted on a smooth surface and the cable inlet/outlet shall be secured against leakage.

Data

Nominal voltage	34 VDC
Working voltage	20-38 VDC
Supervising current	0.2 mA
Alarm current	2.5 mA
Ingress protection	IP23D
Temperature range	-25 °C to +70 °C
Ambient humidity	0 to 95% RH
Material	PC/ABS
Colour	Red, RAL 3001
Weight	~160 g
Cable dimension	Ø6-12 mm

Certified according to	0470/yy yy = year of production
Spare glasses (10pcs.)	Part no. 5200075-00A

Connection

Connection of this call point depends on its function in the fire alarm system. The different alternatives are illustrated below.

Connection with short-circuit protection

NOTE!
Connection with short-circuit protection is not applicable for system CS3000 or CS3004.

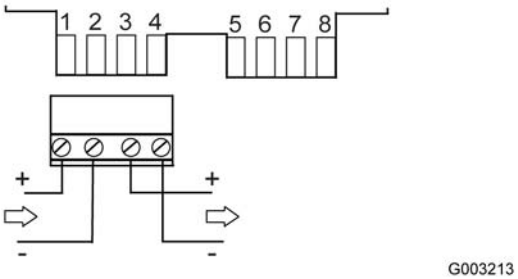

Figure 1. Connection with short-circuit protection for system Salwico Cargo, Salwico Cruise, Salwico Workboat, Salwico Yacht and Salwico RoPax

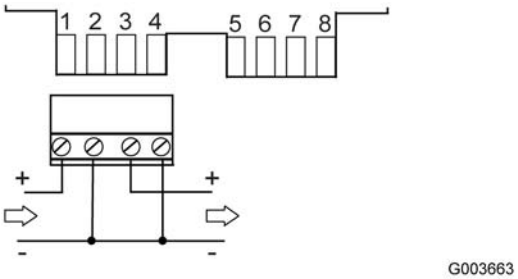

Figure 2. Connection with short-circuit protection for system CS4000

Connection without short-circuit protection

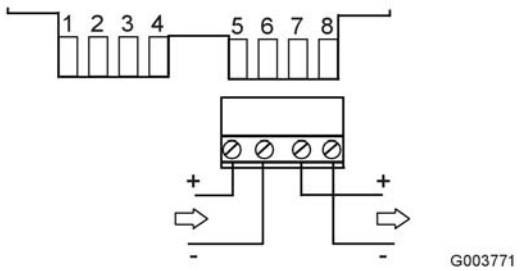

Figure 3. Connection without short-circuit protection for system Salwico Cargo, Salwico Cruise, Salwico Workboat, Salwico Yacht, Salwico RoPax, CS3000, CS3004, CS4000. Normal connection as spare part.

Test

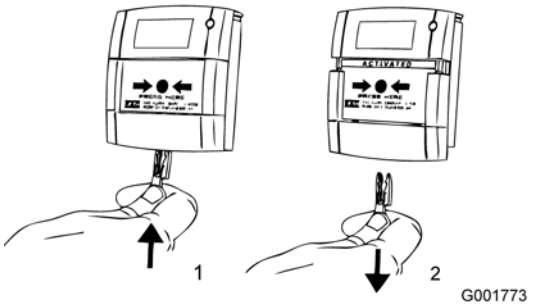

Change Glass

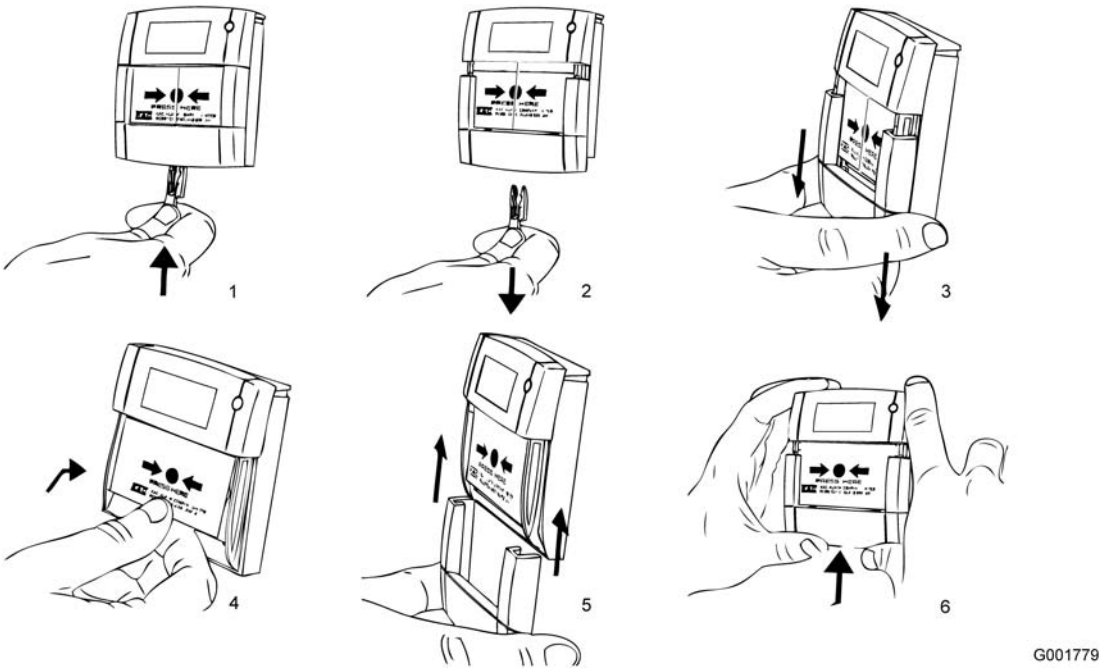

Dimensions (mm)

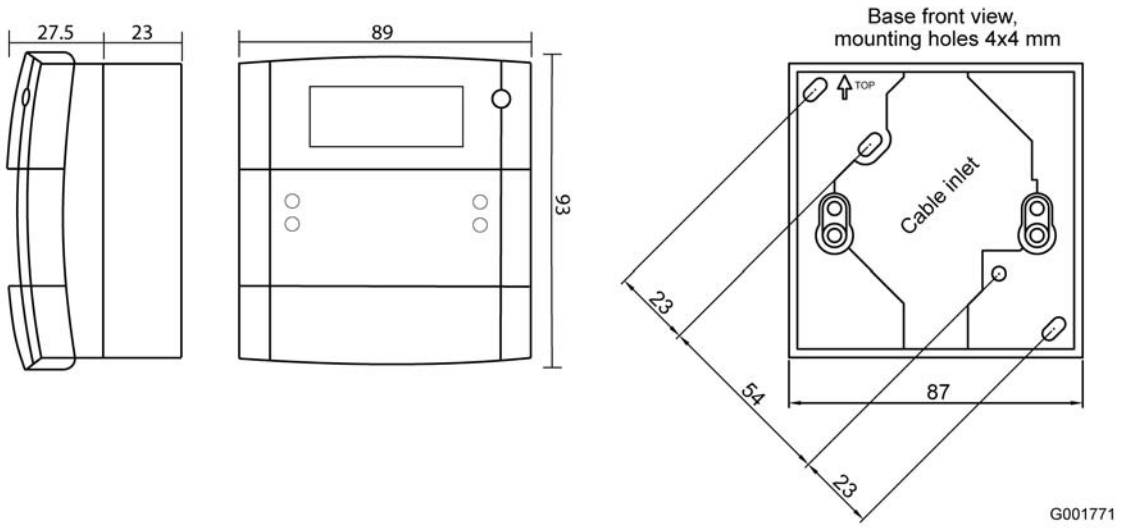

Mounting Dimensions (mm)

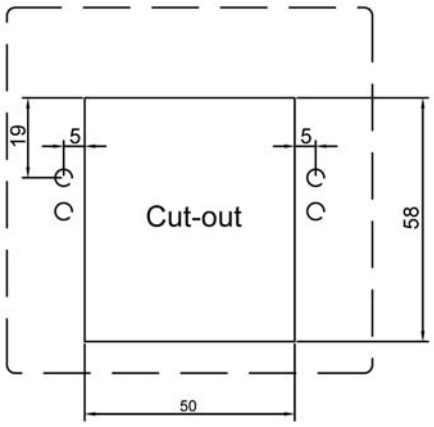

G003141

G003143

Manual Call Point IP67

Salwico MCP-A WP

Part no. 5200031-01A

System: Salwico Cargo, Salwico Cruise, Salwico Workboat, Salwico Yacht, Salwico RoPax, CS3000, CS3004, CS4000

General Description

MCP-A is an addressable manual call point, designed for the Salwico addressable fire alarm systems. The selected material PC/ABS and the encapsulation, with ingress protection IP67, makes it very suitable for harsh environment.

Pressing the glass causing it to crack activates the fire alarm. A protective plastic coating on the glass prevents operator injury.

An LED on the front of the call point indicates the fire alarm. The LED remains lit until the fire alarm has been reset on the fire alarm panel.

The call point can also be tested with a special key, included in the delivery.

The address of the call point is set with a DIP-switch.

The MCP-A provides short-circuit protection via connections 1-4 and no short-circuit protection via connections 5–8.

Data

Nominal voltage	34 VDC
Working voltage	20-38 VDC
Supervising current	0.2 mA
Alarm current	2.5 mA
Ingress protection	IP67
Temperature range	-25 °C to +70 °C
Ambient humidity	0 to 95% RH
Material	PC/ABS
Colour	Red, RAL 3001
Weight	~240 g
Cable dimension	Ø6-12 mm

Certified according to	0470/yy yy = year of production
Spare glasses (10pcs.)	Part no. 5200075-00A

Connection

Connection of this call point depends on its function in the fire alarm system. The different alternatives are illustrated below.

Connection with short-circuit protection

NOTE!
Connection with short-circuit protection is not applicable for system CS3000 or CS3004.

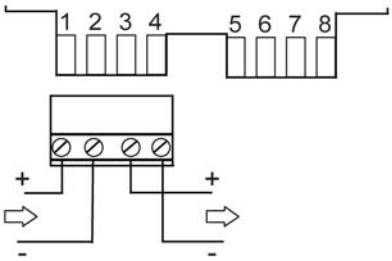

G003213

Figure 1. Connection with short-circuit protection for system Salwico Cargo, Salwico Cruise, Salwico Workboat, Salwico Yacht and Salwico RoPax

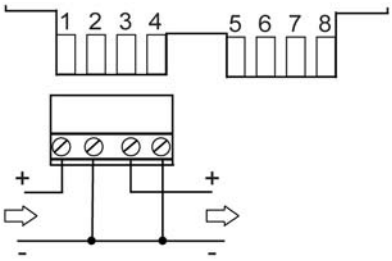

G003663

Figure 2. Connection with short-circuit protection for system CS4000

Connection without short-circuit protection

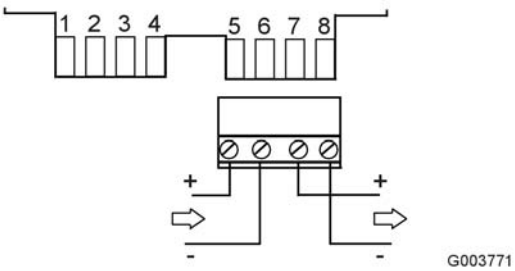

Figure 3. Connection without short-circuit protection for system Salwico Cargo, Salwico Cruise, Salwico Workboat, Salwico Yacht, Salwico RoPax, CS3000, CS3004, CS4000. Normal connection as spare part.

Test

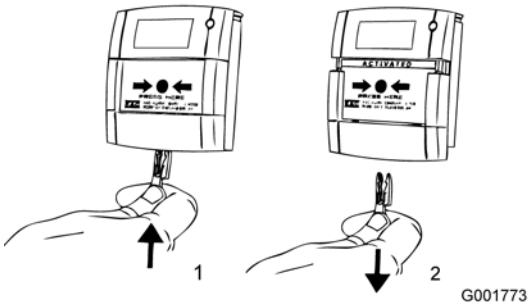

Cover removal

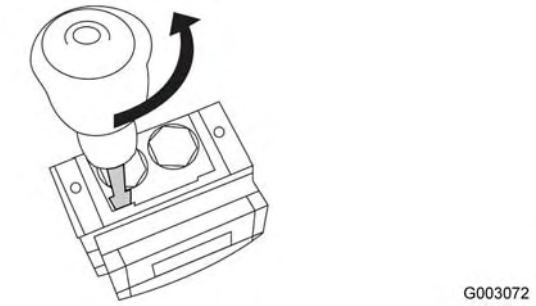

Remove the four cover fixing screws. Place the edge of a large flat bladed screwdriver into the slot between the cover and back box, as shown in picture, and gently twist until the latches are disengaged. Pull cover away from the back box.

Change Glass

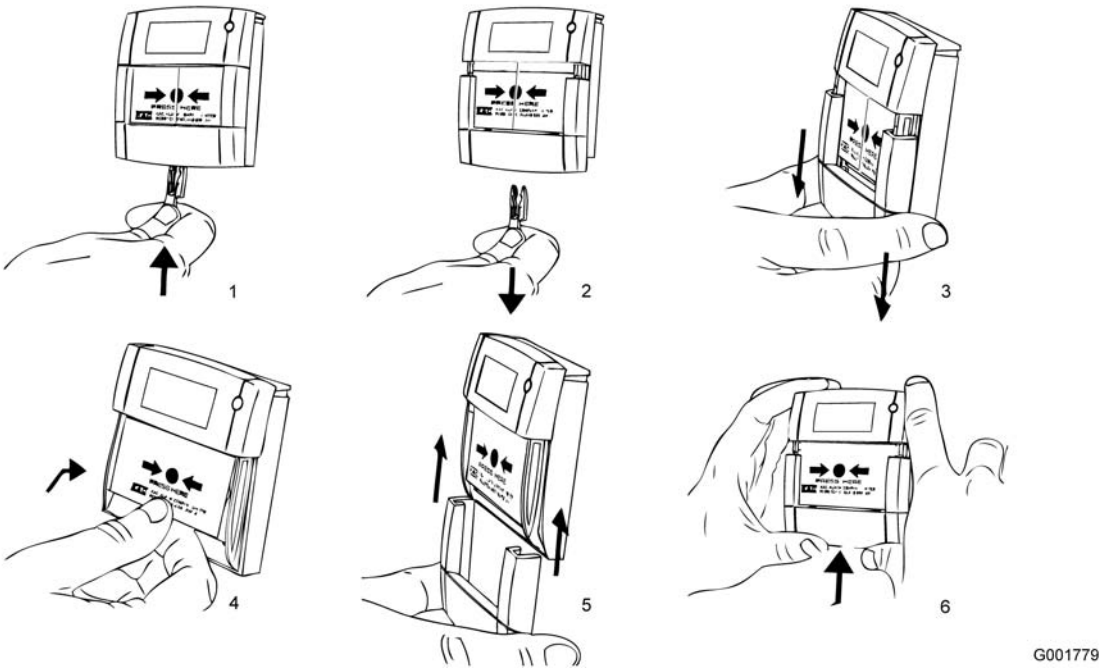

Dimensions (mm)

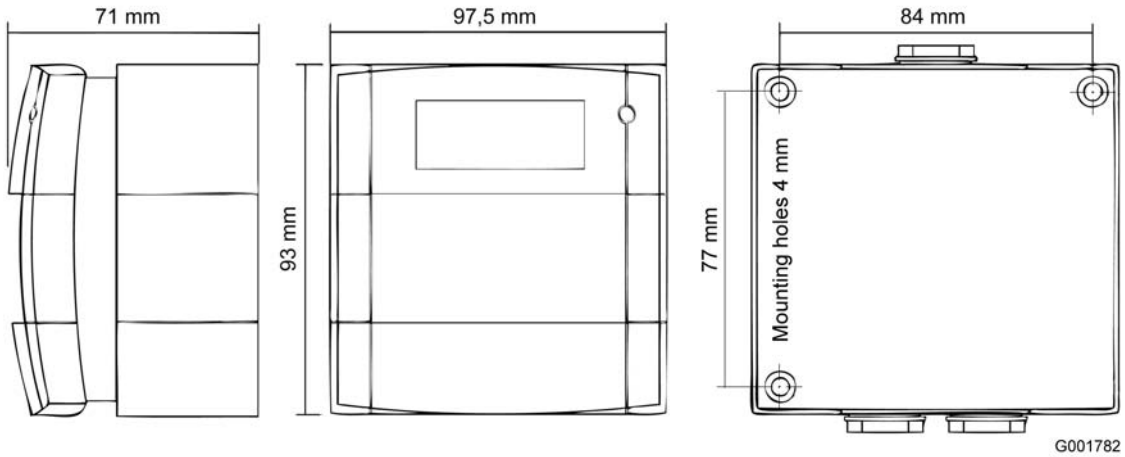

G008639

General alarm push button
Salwico NS-GA2

Part no. N1307

System: All Salwico fire alarm systems

Description

The general alarm push button NS-GA2 is designed for use in dry spaces. The NS-GA2 can be wall- or recessed mounted. It is delivered c/w box for wall mounting. A plastic lid protects it from unintentional activation.

NS-GA2 has dual functions:

- GA ON/OFF
  Activates the pre-programmed general alarm pattern. The button will stay active until it is pressed again.
- Alarm backup
  Activates the audible alarm as long as it is pressed (momentary activation).

Data

Function	Closing contact
Nominal voltage	20-38 VDC
Ingress protection	IP22
Cable terminals	1.5 mm^2
Material	PC/ABS
Colour	Red
Weight	~170 g

Dimensions (mm)

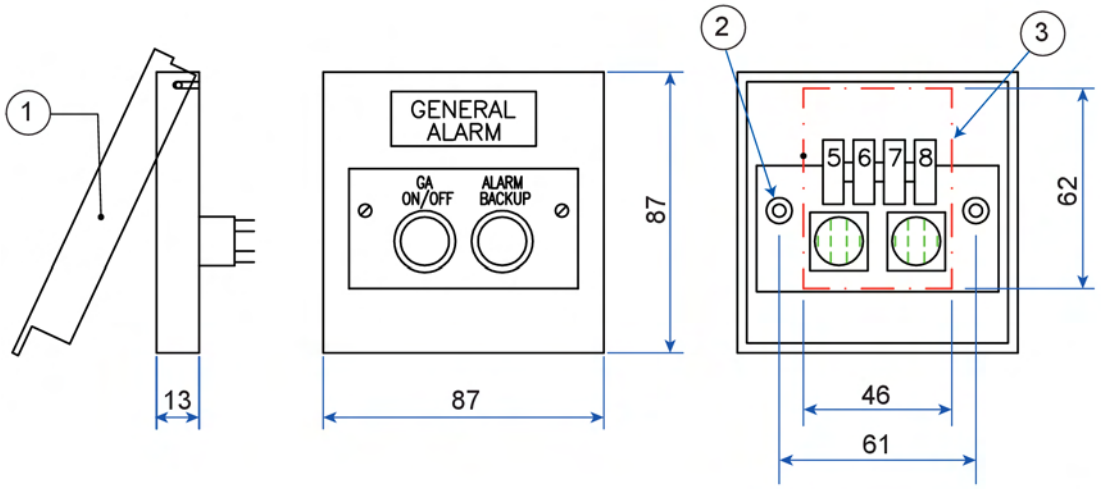

G008655

Figure 1. Dimensions side, front and back.

1. Plastic lid
2. Mount screws (x2) M4 x 20
3. Cut out size 62x46 mm

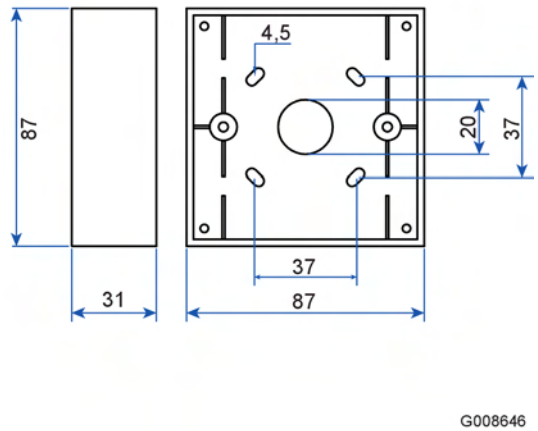

Figure 2. Dimensions box for wall mounting

Connection

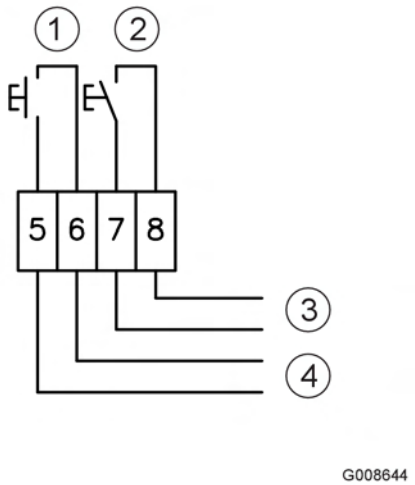

1. Alarm backup
2. GA ON/OFF
3. GA ON/OFF
4. Alarm backup

Door holder magnet
Salwico GPT-AG

Part no.:	Magnet GPT	7102
	Armature AG	7107

System: All Salwico fire alarms

Description

The magnetic door holder consists of two parts:

- GPT, door holder magnet, mounted on the wall.
- AG, armature, mounted on the door.

When the power to the magnet is cut, the door is released and a door closer may close the door.

The GPT magnet is equipped with a door release button for local door release.

Data

Nominal voltage	24 VDC
Working voltage	See *Traction power* below
Holding power	650N
Working current	40 mA at 24 VDC
Power consumption	1W
Cable dimension*	Ø 7-11 mm
Cable terminals	1.5mm^2
Colour	Grey
Weight, GPT+AG	~700 g

*With the extension gland, part no. 7106, the cable dimension will be extended to max Ø 15 mm.

Dimensions (mm)

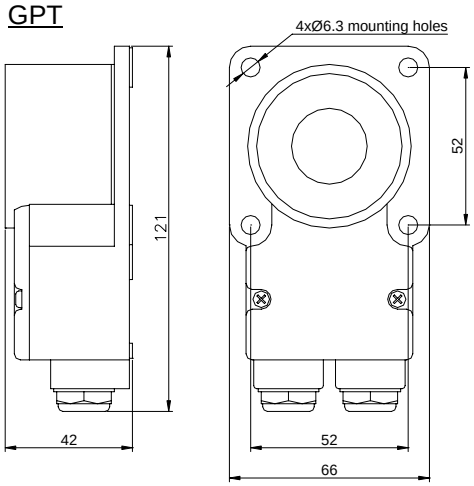

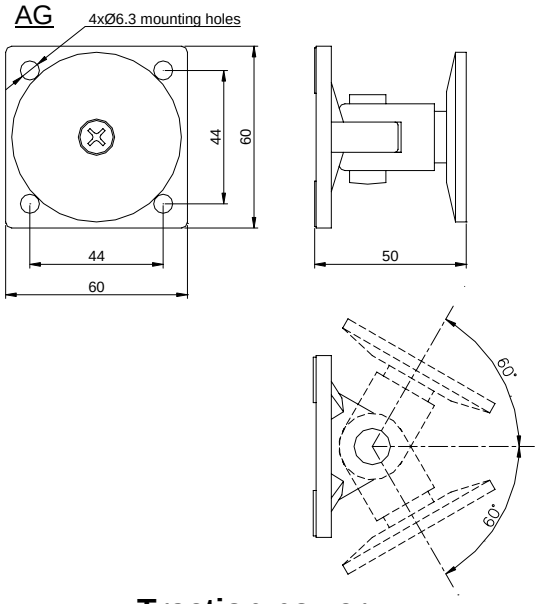

Connection

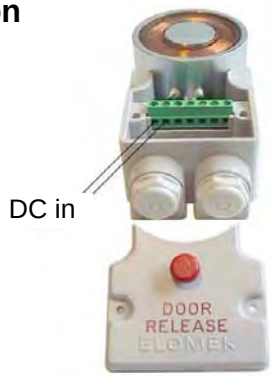

Traction power

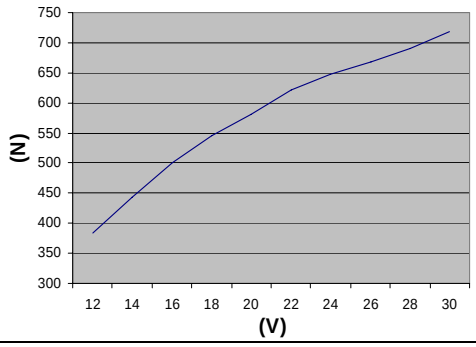

Consilium
Consilium Marine AB
P.O. Box 8763, SE-402 76 Göteborg
Phone +46 31 7107700 Fax +46 31 7107800
www.consilium.se

G004203

Timer Control Unit
Salwico TC10 WP

Part no. 5200276-00A

DRAFT

System: CS3000, CS3004, CS4000, Salwico Cargo, Salwico Cruise, Salwico LNG, Salwico Offshore, Salwico Ro/Pax, Salwico Workboat, Salwico Yacht, Salwico Navy, OEM Extinguish

General Description

The addressable timer control unit TC10 WP is used for temporarily disconnecting detectors, to prevent unwanted alarms, e.g. at service, welding etc. The timer is connected to the same system loop as detectors and other loop units and communicates with the central unit in the same way as they do.

The TC10 WP has an output with a potential free change-over relay.

The system address of the unit is set by a DIP-switch.

NOTE!
The TC10 WP has a built in short circuit isolator for the loop connection. This function can be overridden by DIP-switch SW2.

Data

Nominal voltage	33 VDC
Working voltage	22 - 38 VDC
Current consumtion	~ 200 µA
Output	1 change-over relay ???, max ?? V, ?? A
Ingress protection	IP 32 ???
Realative Humidity	At low temperature ??% At high temperature ??% ± ?%
Ambient temperature	-10°C to +55°C
Cable terminals	2.5 mm^2
Material	PC/ABS ??
Colour	Black
Weight	??? g
Certified according to	CE ????-CPD-????

TC10 WP as a Replacement Unit

TC10 WP replaces the following former products:

- 046400 UR-2K Timer 0-30 min
- 046401 UR-2KN Timer with key 0-30 min
- 046401-20 UR-2KN Timer with key 15+5 min
- 046401-120 UR-2KN Timer with key 0-2h

NOTE!
Physical dimensions will differ between TC10 WP and the former products.

Timer Functions

G004268

Keyboard

The numeric keyboard is used for entering the setup mode or to unlock the timer in case the access authorization mode has been enabled in the setup.

The time set keys decrease or increase the time in 30 minute steps to nearest 30 minute time on the display. The timer unit is turned off if set time decreases to zero.

The detectors on the loop are disconnected (disabled) then the timer is activated.

The display shows the active countdown in hours, minutes and seconds.

When the timer reaches zero the display is activated to indicate that a bonus time of 5 minutes remains. The unit gives a short beep every 10 seconds.

The detectors are reconnected when the bonus time has passed.

If the timer is set to OFF the detectors are immediately reconnected.

Lamp test

The sounder, display and keys are activated for 2 seconds when the lamp test function is initiated by pressing the numeric keys 1 and 3.

Setup mode

- Start address for disablement on the same loop
- Last address for disablement on the same loop
- Maximum time (30 min - 6 hours)
- 5 minute beep, disable
- Access right mode, enable

The Cause/Effect sheet in the Configuration program can also be used to enter commands to control the detectors.

DIP-Switches

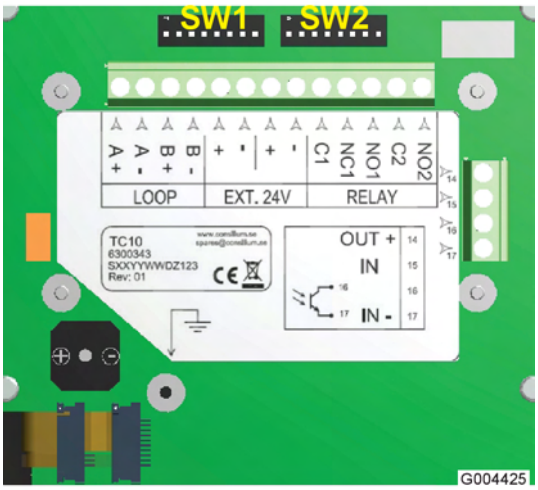

Figure 1. Location of DIP-switches and connections on the PCB

The following functions are set by the DIP-switches. (Use a pointed metal tool in a suitable size.)

Address switch SW1

The system address of the timer control unit is set by DIP-switch SW1.

If all switches are OFF, the address will be 0 and the unit address can be set from the loop.

Function switch SW2

The following functions are set by the switch SW2:

Dip 1 to 5 are used to select different operation modes.

Table 1. ID set by SW2 DIP 1 to 5

ID	Function	Unit type
0	Emulate	UR-2_5MIN, type 232
1	Emulate	UR-2, type 233
2	Emulate	UR-2_5MIN_SMOKE, type 234
3	Emulate	UR-2_SMOKE, type 235

Dip 6 is not used.

Dip 7 to 8 activates different behaviors for the unit.

Table 2. Different modes set by SW2 DIP 7 to 8

SW2 DIP no.		Function
7	ON	Supervise external 24VDC feeding, if connected.
8	ON	To automatically close the SCI (short circuit isolator) at power up.

Terminals

Terminal			Connection
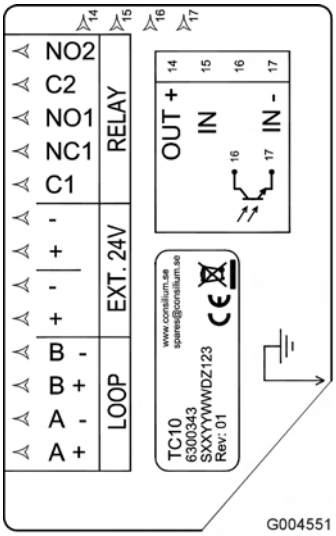	NO2	RELAY	Relay output
	C2		
	NO1		
	NC1		
	C1		
	-	EXT. 24V	Power supply 24VDC, OUT
	+		
	-		Power supply 24VDC, IN
	+		
	B-	LOOP	Loop OUT
	B+		
	A-		Loop IN
	A+		
	14	OUT+	Isolated local output
	15	IN	Local input
	16		
	17		

Figure 2. Label on PCB

Connection Example

Dimensions (mm)

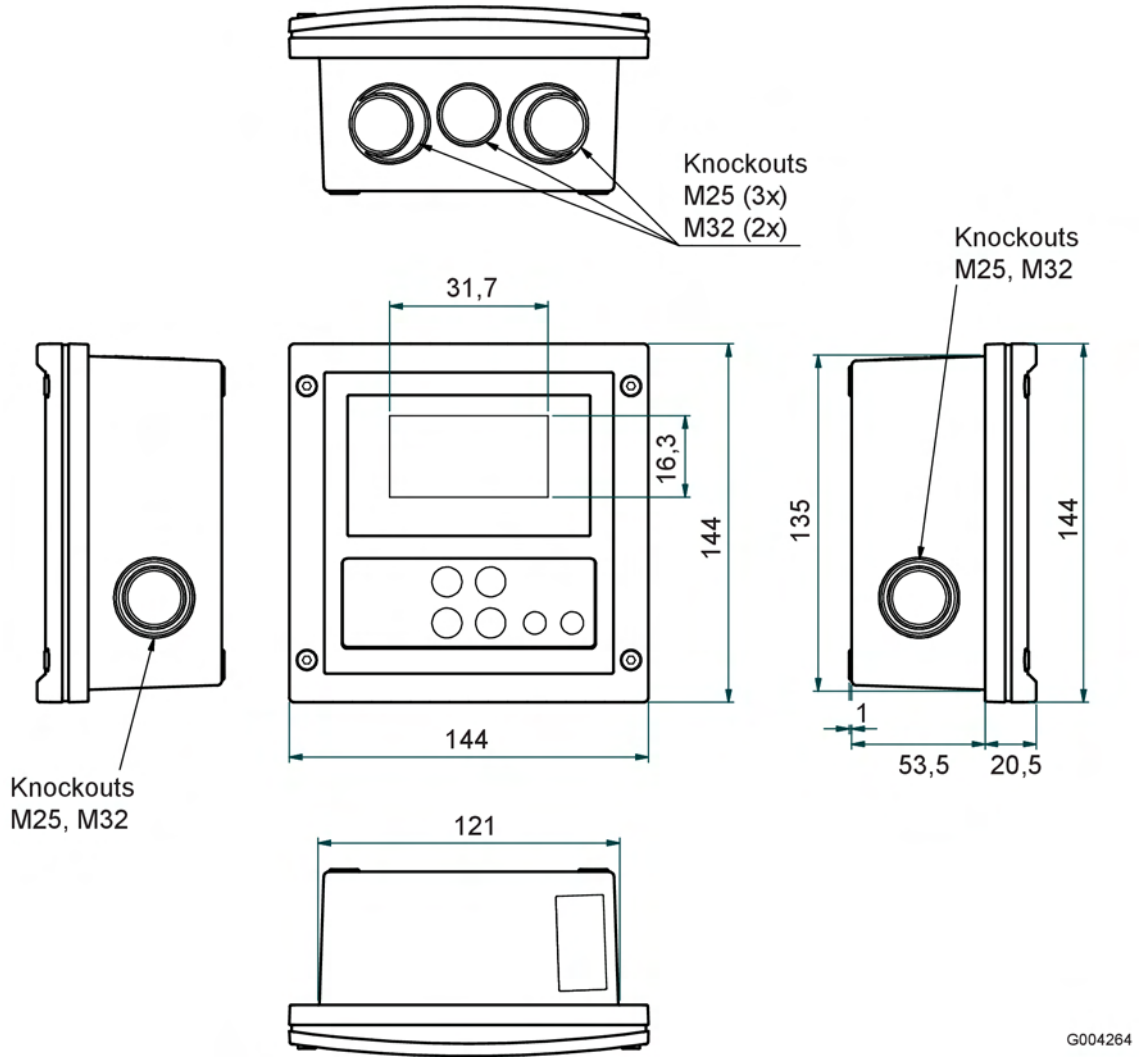

Mounting holes in housing (mm)

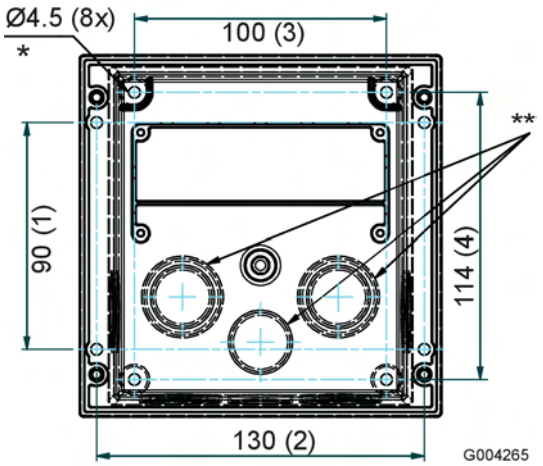

Table 3. Notes for mounting holes in TC10 housing

(1) & (2)	Dimensions for inset
(3) & (4)	Dimensions for wall mounting
*	Holes are only indicated in plastic, use drill or sharp knife to clear.
**	Knockouts on rear side. M25 (3x), M32 (2x)

Sounder & beacon, 32 tones

Salwico Flashni/IP65

Part no. N1546

System: All Salwico fire alarm systems

Description

Flashni is a compact combination of a high output sounder and beacon for spaces requiring both audible and visual indication of alarms. The ingress protection IP65 makes it suitable for installation in harsh environment.
The sounder can be set to 32 different tones. The tones are set with a DIP switch inside the unit.
It is also equipped with a volume control.

Data

Power input	24 VDC (18 - 30 VDC)
Working current	58 - 85 mA
Cable diameter	Ø8-14 mm
Cable terminals	4 mm²
Sound frequency	300 – 4000 Hz
Sound output	83 - 110 dBA at 1 m
Volume control	0 to -20 dB
Flash frequency	1 Hz
Flash energy	0.7 J
Operating temperature	-10ºC to +55ºC
Material	ABS/Polycarbonate
Colour base/beacon	Red/red
Ingress protection	IP65
Weight	~360 g

Dimensions (mm)

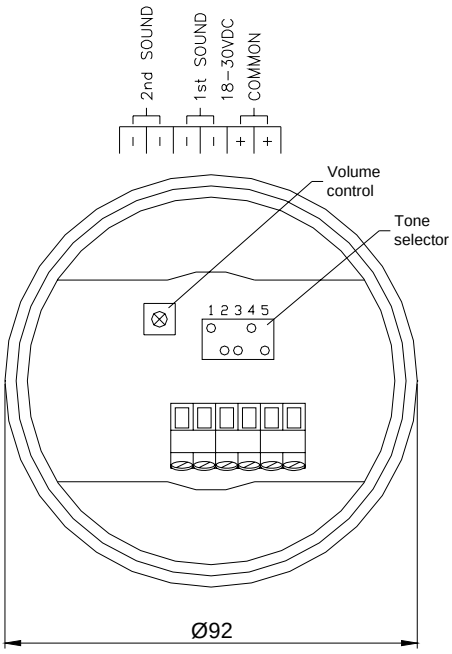

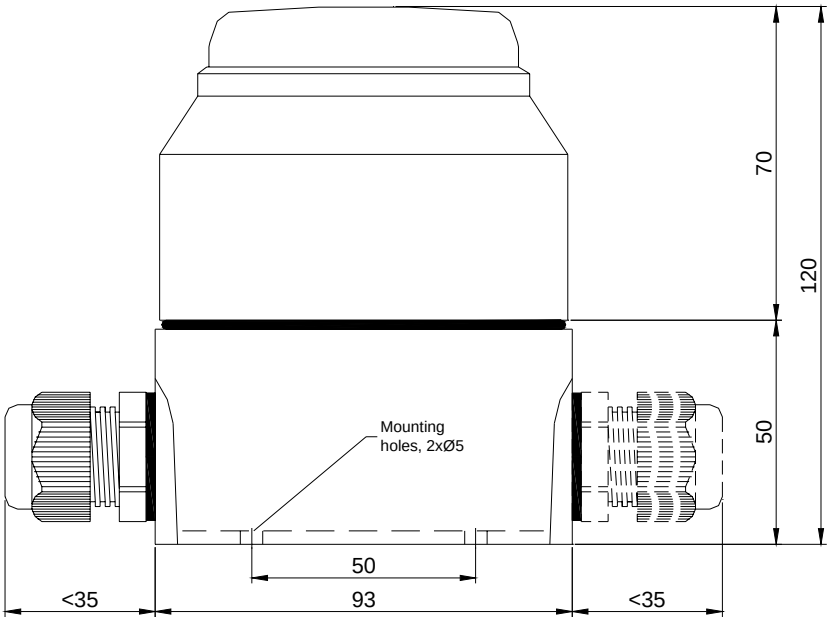

Connection

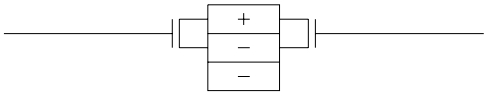

Consilium Marine AB
P.O. Box 8763, SE-402 76 Göteborg, Sweden
Phone +46 31 710 77 00 Fax +46 31 710 78 00
www.consilium.se

Tone settings

		Description				
Tone 1	Tone 2	Type	Hz		mA	dB(A)
1	14	Alternating	800 & 970	2 Hz	68	100
2	14	Sweep	800 to 970	7 Hz	68	101
3	14	Sweep	800 to 970	1 Hz	68	101
4	14	Continuous	2850	Steady	82	110
5	4	Sweep	2400 to 2850	7Hz	80	110
6	4	Sweep	2400 & 2850	1 Hz	80	110
7	14	Slow whoop	300 to 1200	3 s swwp, 0.5 s silence, then repeat	70	98
8	14	Sweep	1200 to 500	1Hz	66	98
9	4	Alternating	2400 & 2850	2 Hz	80	109
10	14	Intermittent	970	0.5 Hz	62	100
11	14	Alternating	800 & 970	1 Hz	68	100
12	4	Intermittent	2850	0.5 Hz	74	109
13	14	Intermittent	970	0.8 Hz (250 ms ON / 1 s OFF)	58	96
14	14	Continuous	970	Steady	70	101
15	14	Alternating	554 & 440	100 ms - 400 ms	62	93
16	16	Intermittent	660	3.3 Hz	59	86
17	17	Intermittent	660	0.28 Hz	62	88
18	18	Intermittent	660	0.05 Hz (6.5 s ON / 13 s OFF)	64	88
19	19	Continuous	660	Steady	64	89
20	20	Alternating	554 & 440	0.5 Hz	63	96
21	21	Intermittent	660	1 Hz	60	87
22	14	Intermittent	2850	4 Hz (150 ms ON / 100 ms OFF)	72	109
23	14	Sweep	800 to 970	50 Hz	68	101
24	4	Sweep	2400 to 2850	50 Hz	75	110
25	25	Intermittent	970	3x500 ms pulses followed by 1.5 s silence, then repeat	64	99
26	26	Intermittent	2850	3x500 ms pulses followed by 1.5 s silence, then repeat	70	108
27	27	Continuous	4000	Steady	85	83
28	10	Alternating	800 & 970	2 Hz	67	100
29	33	Alternating	990 & 650	2 Hz	71	99
30	35	Alternating	510 & 610	2 Hz	65	96
31	31	Sweep	300 & 1200	1 Hz	71	96
32	32	Continuous	4000	Steady	85	83

The current consumption in the above list is the average power consumption at 24 VDC.

Consilium
Consilium Marine AB
P.O. Box 8763, SE-402 76 Göteborg, Sweden
Phone +46 31 710 77 00 Fax +46 31 710 78 00
www.consilium.se

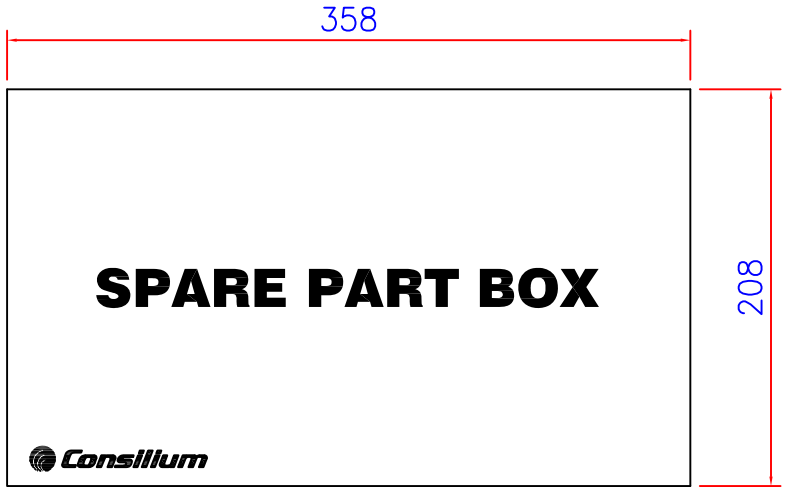

TOP VIEW

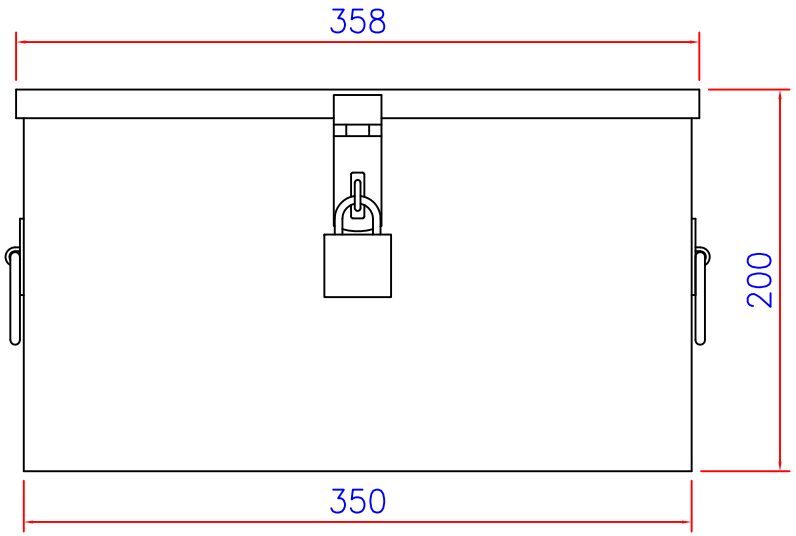

FRONT VIEW

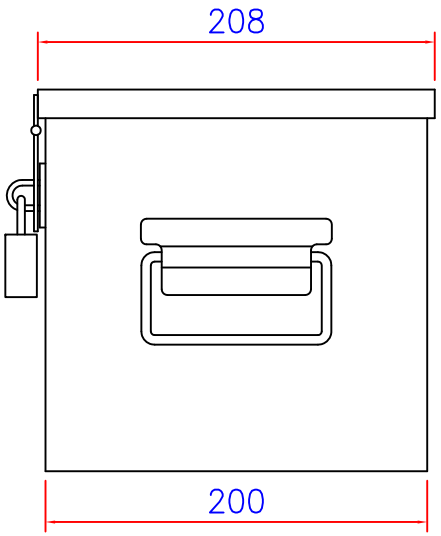

SIDE VIEW

NO.	DATE	DESCRIPTION	NAME	SHEET NO.	.
3	.	.	.	APP BY	
2	.	.	.	CHK BY	
1			.	DWG BY	
0			.	SCALE	

PROJECT	
NAME	Consilium Spare box
DRAWING NO.	

ASIA ELECTRIC CO.

NO.	NAME	MATERIAL & SPEC.	Q'TY
6			
5			
4			
3			
2			
1			

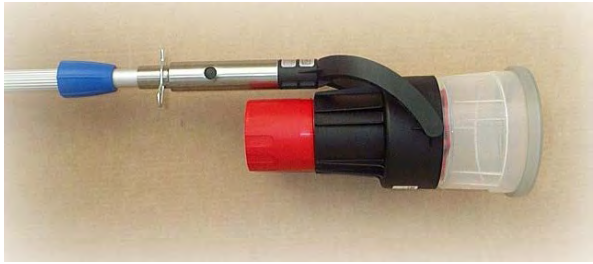

Description

Insert the canister into the smoke dispenser. Lock into place using the screw mechanism. Place the cup over the detector and discharge spray (not more than 1 second) with a slight upward movement.

Repeat this action without removing the cup every 10 seconds for max 1 minute, until the detector is in alarm.

Unit	Part no.
Detector tester Solo 330	N1738
Test gas	9153
Pole adapter	N1744
Pole 1.2 - 2.5 m	9150A
Pole 1.4 - 4 m	9151
Pole 1-6 m	N1741
Pole 3.0 - 8 m	9149

Heat Detector Tester
Salwico SOLO 461

Part no. N1743

System: All Salwico fire alarms

Description

The Salwico SOLO 461 is a cordless heat detector tester for the Salwico heat detectors. The tester suits point type, rate of rise, fixed temperature and combination detectors up to 90°C.

Under the control of a microprocessor, blown air is heated by the element just before exiting the duct. This minimise the possibility of heat damage the plastic of the detector.

The tester is activated when an infra-red beam is broken by the detector.

For battery charging instruction and general information, see the manual delivered in the box.

Data

Numbers of test	Typical 50 tests of 30 sec
Battery charger	110-240 VAC 12 VDC (lighter socket)
Standby	120 sec
Auto power off	5 min
Operating temperature	+5°C to +45°C
Storage temperature	-10°C to +50°C
Ambient humidity	0 to 85% RH
Dimension	Inside diameter 100 mm
Material	Plastic
Colour	Black / Red
Weight	~600 g

Test kit

Cordless heat detector test kit including:
1x Cordless heat detector tester
2x Batteries
1x Universal battery charger

Cautions:

- Only for use in safe areas.
- Store in clean, dry space.
- Keep away from children
- The tester may be hot after use.
- Do not use tester in wet conditions.

Consilium

Consilium Marine AB
P.O. Box 8763, SE-402 76 Göteborg
Phone +46 31 7107700 Fax +46 31 7107800
www.consilium.se

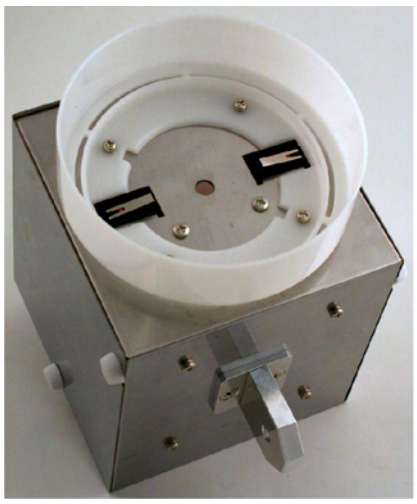

G008691

IR Flame Detector Tester

Salwico IR Test lamp

Part no. 001156

System: CS3000, CS3004, CS4000, NSAC-1, Salwico Cargo, Salwico Cruise, Salwico Offshore, Salwico Ro/Pax, Salwico Workboat, Salwico Yacht, Salwico Navy, OEM Extinguish

General Description

The Salwico IR test lamp is used to perform function test on Salwico IR flame detector.

The extension rods packed in a nylon case makes it possible to easily test the detector in all environments.

Data

Nominal voltage	6 VDC
Battery type	Alkaline LR6/AA x 4
Light source	Pliken bulb 4.8V 0.5A
Material:	
- Tester	Metal
- Extension rod	Aluminium
Colour	Gray / Black
Weight	1100 g (incl. carrying bag)
Dimension tester	W111 x H120 x D111 mm
Dimension bag	W250 x H190 x D160 mm
Length ext. rod	1.3 - 3.9 m

Compatibility with included standard adapter

The Salwico IR test lamp is compatible to the following detectors:

5200236-00A	Salwico AC-IR-3Fq
5200039-00A	Salwico EVC-IR
N1122	Salwico NS-DIR

Compatibility with N1130 adapter

The Salwico IR test lamp is compatible to the following IP67 detectors:

5200300-00A	Salwico AC-IR-3Fq IP67 incl. AIN1
N1123	Salwico NS-DIR IP67 incl. AE-2E
N1124	Salwico NS-DIR IP67 incl. AIN1
N1126	Salwico NS-DIR IP67

Accessory

N1130 Adapter for IP67 detectors (not included in the IR test lamp Part no. 001156).

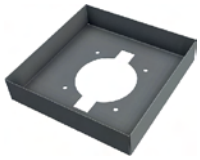

Sold separately as Part no. N1130.

Detector Test

There are two ways to test the detector:

(a) Press the tester against the detector until the detector cause the tripping of the test initiation switch with an intermittent buzzer sounds. After about 10-15 seconds, check if the detector has operated.

(b) Set the manual test switch located on the rear of the device to "ON" position to cause a continuous intermittent buzzer sound. Hold the tester close to the detector so the distance between the detector and the device is within 5 cm. If the detector operates within 30 seconds under this condition, the detector is normal.

If the is no response after 30 seconds in any of those tests there may be a problem with the detector or the tester itself. See trouble shooting in manual.

Special Note

CAUTION!
Do not touch the surface of the infrared filter by fingers.

If the surface needs to be cleaned, use the cotton swab with alcohol. Wipe of the dust gently so the glass doesn't be scratched.

G002734

Evolution Address Programmer
EV-AD2

Part no. 5200123-00A

System: CS3000, CS4000, NSAC-1, Salwico Cargo, Salwico Cruise, Salwico LNG, Salwico Offshore, Salwico Ro/Pax, Salwico Workboat, Salwico Yacht, Salwico Navy, OEM Extinguish

General description

The Evolution Address Programmer is used to set the address in Salwico Evolution fire alarm detectors in a marine environment (Hard Customer Code 2).

The detector is attached to the programmer. The procedure to set or change the address takes only a few seconds.

The EV-AD2 requires two 9 V PP3 non-rechargeable alkaline batteries. The programmer indicates when the battery is low.

CAUTION!

- Use only the specified power supply.
- Switch off the EV-AD2 when connecting or disconnecting the battery.
- Do not dismantle or modify the EV-AD2.
- Keep the EV-AD2 away from contact with water.

NOTE!

- Avoid subjecting the EV-AD2 to excessive vibration or shock.
- Remove the batteries if the EV-AD2 is to be stored for a longer time.
- Do not leave the EV-AD2 in direct sunlight, near hot surfaces, or in areas where magnetic or electromagnetic waves are generated.
- Do not mix batteries of different type or capacity.
- Avoid using in conditions of extreme humidity or temperature.

Data

Power supply	18 VDC, 2 x PP3 Type alkaline batteries (not supplied) 24 VDC (using AC power unit)
Operating temperature	0–40°C
Humidity	Up to 85% RH (non-condensing)
Dimensions	230 x 65 x 120 mm
Material	ABS
Weight	~360 g (without batteries)
Test device	One EV protocol device at a time

Error codes

E01	Receive frame error
E02	Receive frame bit error
E03	No communication
E04	Checksum error
E10	Write new address error
E11	EEPROM error
E20	Step-up transformer trouble or over current by short circuit of signal line. The EV-AD2 will switch to "Standby mode" to prevent damage.
E21	Low battery trouble. The EV-AD2 will switch to "Standby mode" to prevent damage.
E22	Low battery warning. Changes shortly to "Low battery trouble". Insert new batteries.

Description of keys/connections

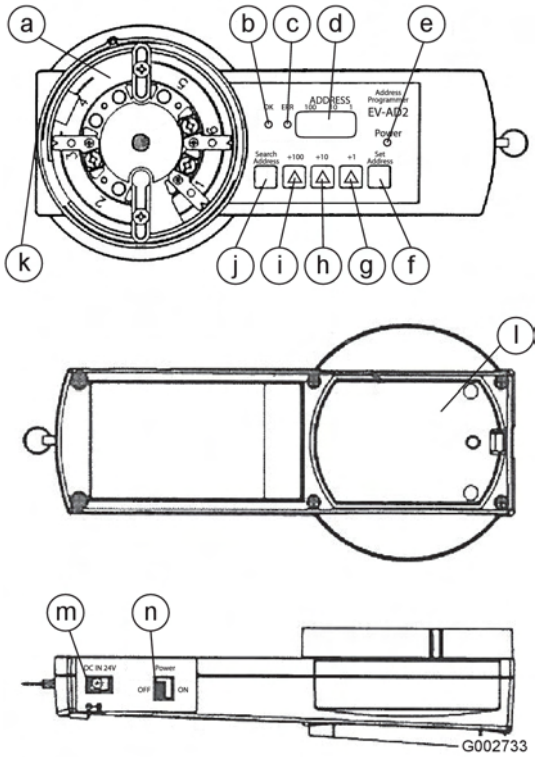

a Base for connecting the detector.

b "OK". Completed LED (Green) – lit when programming of new address is completed.

c "ERR". Error LED (Orange) – lit when programming of new address could not be completed.

d "ADDRESS" "100 10 1". 7-segment LED displays the customer code, type code or address.

e "POWER". Power LED (Green) – lights when the power switch is ON. Blinks if the programmer is reporting "Low battery".

f "Set Address". To write the address into the device.

g "+1". Increase address by one one.

h "+10". Increase address by ten.

i "+100". Increase address by hundred.

j "Search Address". To start transmission and find the address of the detector/module.

k RJ45 Socket for connecting the module.

l Battery box for PP3 non-rechargeable alkaline batteries.

m "DC IN 24V". Plug adaptor for the AC power unit (not supplied).

n "Power". To turn the EV-AD2 "ON" or "OFF".

Instructions

Hint!
If there is no key operation for more than one minute, the EV-AD2 will switch to "Standby mode" for saving battery.
Press any key to start from "Standby mode".

1. Before inserting the batteries, check polarity and confirm that the EV-AD2 is turned off.
2. Turn the power switch "ON".
   For one second all LEDs are lit and the buzzer sounds.
3. Attach the detector to the EV-AD2.
4. Press "Search Address".
   The buzzer sounds, then the EV-AD2 starts transmitting to the detector. Do not remove the detector during transmission.
5. Press any key at any time during the information collection cycle to force the EV-AD2 to display the address and await new address collection.
   The 7-segment LED reads.

   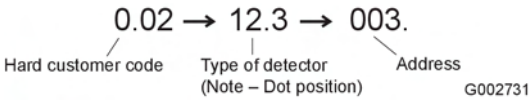

   The buzzer sounds, error LED "ERR" lights and the 7-segment LED displays an error code when an unsupported or defective detector is connected.
   The information cycles every second and stops while displaying the address at the end of the second cycle.
6. Select the new address by using the keys "+100", "+10" and "+1".
7. Press "Set Address".
   The buzzer sounds and all LEDs are turned off. The EV-AD2 starts to transmit to the detector. Do not remove the detector during transmission.
8. The 7-segement LED shows the new address and the completed LED "OK" lights.
   The buzzer sounds, error LED "ERR" lights and the 7-segment LED displays an error code when an unsupported or defective detector is connected.
9. Remove the detector and repeat with a new one (start from step 3).
10. Finish by turning the power switch "OFF".

Certification List for Explosion Proof Type Equipment

Customer Samsung Heavy Industries Co., LTD
Item Salwico Fire Alarm System CCP
Hull no. HN 2074

No.	Equipment name	Model Name	Classification	IP-Grade	Cert.No.	Location	Manufacturer	Remark
1	Manual Call Point	ACP-IS	Eex ia IIC T5	IP67	04ATEX1246X	-	Consilium Fire&Gas	
2	Isolator	N1790 ISOLATOR-A	Eex ia IIC	IP55	BAS00ATEX7087	-	Pepperl + Fuchs GB Limited	
3	Smoke & Heat detector	NS-AOHS-IS	Eex ia IIC T5/T4	IP55	05ATEX1136X	-	Consilium Fire&Gas	

Nemko

[1] EC-TYPE EXAMINATION CERTIFICATE

[2] Equipment or Protected System Intended for use in Potentially explosive atmospheres Directive 94/9/EC

[3]	**EC-Type Examination Certificate Number:**	**Nemko 05ATEX1136X**
[4]	**Equipment or Protective System:**	**Optical Smoke/Heat Detector**
[5]	**Applicant & Manufacturer:**	**Consilium Fire & Gas AB**
[6]	**Address:**	**Box 8763 SE-40276 Göteborg SWEDEN**

[7] **This equipment or protective system and any acceptable variation thereto is specified in the schedule to this certificate and the documents therein referred to.**

[8] **Nemko AS, notified body number 0470 in accordance with Article 9 of Council Directive 94/9/EC of 23 March 1994, certifies that this equipment or protective system has been found to comply with the Essential Health and Safety requirements relating to the design and construction of equipment and protective systems intended for use in potentially explosive atmospheres given in Annex II to the Directive.**

The examination and test results are recorded in confidential report no. 42448

[9] **Compliance with the Essential Health and Safety Requirements has been assured by compliance with:**

CENELEC EN 50014: 1997 + A1: 1999 + A2: 1999, CENELEC EN 50020: 2002 and CENELEC EN 50284: 1999

[10] **If the sign "X" is placed after the certificate number, it indicates that the equipment or protective system is subject to special conditions for safe use specified in the schedule to this certificate.**

[11] **This EC-TYPE EXAMINATION CERTIFICATE relates only to the design, examination and tests of the specified equipment or protective system in accordance to the directive 94/9/EC.**
Further requirements of the Directive apply to the manufacturing process and supply of this equipment or protective system. These are not covered by this certificate.

[12] **The marking of the equipment or protective system shall include the following:**

II 1 G **EEx ia IIC T5 Ta: 70°C or**
EEx ia IIC T4 Ta: 70°C

Oslo, 2005-07-07

Rolf Hoel
Certification Department

This certificate may only be reproduced in its entirety and without any change, schedule included.

Postal address: P.O.Box 73 Blindern N-0314 OSLO, NORWAY
Office address: Gaustadalléen 30 0373 OSLO
Telephone: +47 22 96 03 30
Fax: +47 22 96 05 50
Enterprise number: NO 974404532

Nemko

[13] Schedule

[14] EC-TYPE EXAMINATION CERTIFICATE No Nemko 05ATEX1136X

[15] Description of Equipment or Protective System

The optical side of the NS-AOHS-IS utilises the light scatter sensing principle, using a LED and photodiode in a light proof chamber. The LED pulses infrared light into the smoker chamber, the photodiode being positioned such that a minimum of light is normally received. As the smoke enters the sensor the amount of scattered light increases. This change is detected by the photodiode and is amplified before being processed and transmitted to the control panel.
The heat element uses a thermistor to sense the local ambient air temperature. A value relative to the local ambient air temperature is transmitted to the control panel.

Type Designation
NS-AOHS-IS

Safety Data

Maximum input voltage.	U_i:	28VDC
Maximum input current.	I_i:	93.3mA
Maximum input power.	P_i:	0.66W
Maximum internal capacitance	C_i:	1nF
Maximum internal inductance	L_i:	Negligible

The output circuit of the supply diode safety barrier shall have a linear resistive characteristic.

Ingress Protection Code
IP20 according to EN 60529.

[16] Report No. 42448

Descriptive Documents

Name/Title	Drawing No.	Rev.	Date	Sheets
Part list	SA01/NS-AOHS-IS	1	2005-06-20	5
NS-AOHS-IS EXTERNAL APPEARANCE	080071	1	2005-03-08	1
NS-ADAPT-IS2 APPEARANCE (AOHS-IS)	080070	1	2005-03-08	1
NS-AOHS-IS DETECTOR LOGO	067957	1	2005-04-04	1
NSx-AOHS-IS SERIES SYSTEM CONNECTION DIAGRAM	073064	1	2005-03-24	1
STB-4IS2 LABEL (AOHS-IS)	067955	1	2005-03-08	1
NS-ADAPT-IS2 (AOHS-IS)	067954	1	2005-03-08	1
NS-AOHS-IS CONSTRUCTION DIAGRAM	096010	1	2005-03-08	1

This certificate may only be reproduced in its entirety and without any change, schedule included.

Postal address:
P.O.Box 73 Blindern
N-0314 OSLO, NORWAY

Office address:
Gaustadalléen 30
0373 OSLO

Telephone:
+47 22 96 03 30
Fax:
+47 22 96 05 50

Enterprise number:
NO 974404532

Nemko

NS-AOHS-IS LABEL (CONSILIUM)	067953	1	2005-03-08	1
STB-4-IS2 APPEARANCE (AOHS-IS)	073063	1	2005-03-08	1
NS-AOHS-IS CIRCUIT DIAGRAM	070029	1	2005-03-24	1
NS-AOHS-IS PCB BOTTOM SILK SCREEN	095049	1A	2005-04-05	1 of 8
NS-AOHS-IS PCB TOP COPPER	095049	1A	2005-04-05	2 of 8
NS-AOHS-IS PCB TOP SOLDER RESIST	095049	1A	2005-04-05	3 of 8
NS-AOHS-IS PCB BOTTOM COPPER	095049	1A	2005-04-05	4 of 8
NS-AOHS-IS PCB BOTTOM SOLDER RESIST	095049	1A	2005-04-05	5 of 8
NS-AOHS-IS PCB DRILL DATA	095049	1A	2005-04-05	6 of 8
NS-AOHS-IS PCB MIDDLE COPPER	095049	1A	2005-04-05	7 of 8
NS-AOHS-IS PCB PALLETTE	095049	1A	2005-04-05	8 of 8

[17] Special Conditions for Safe Use

The enclosure must only be cleaned with a damp cloth in order to avoid ignition hazard caused by static electricity.

[18] Essential Health and Safety Requirements

See item 9

This certificate may only be reproduced in its entirety and without any change, schedule included.

Postal address:
P.O.Box 73 Blindern
N-0314 OSLO, NORWAY

Office address:
Gaustadalléen 30
0373 OSLO

Telephone:
+47 22 96 03 30
Fax:
+47 22 96 05 50

Enterprise number:
NO 974404532

SUPPLEMENT 2 TO EC-TYPE EXAMINATION CERTIFICATE

[14] EC-TYPE EXAMINATION CERTIFICATE No Nemko 04ATEX1246X

[15] Description of Equipment or Protective System
The certificate is extended to include change of safety data.

Type Designation
Salwico ACP-IS

Safety data:
Ui: 28V
Ii: 93mA
Pi: 651mW
Ci: 33pF
Li: negligible

[16] Report No. 102997

Descriptive Documents

Number	Rev.	Date	Title/Description	Sheets
S-4-010.984	R3	2008.03.03	LABEL MANUAL CALL POINT ACP-IS	1

Routine Test
None

[17] Special Conditions for Safe Use
See schedule of limitations in main certificate

[18] Essential Health and Safety Requirements
See item 9

Oslo, 2008-03-06

Rolf Hoel
Certification Manager, Ex-products

This certificate may only be reproduced in its entirety and without any change, schedule included.

Postal address:
P.O.Box 73 Blindern
N-0314 OSLO, NORWAY

Office address:
Gaustadalléen 30
0373 OSLO

Telephone:
+47 22 96 03 30
Fax:
+47 22 96 05 50

Enterprise number:
NO 974404532

Nemko

[1] EC-TYPE EXAMINATION CERTIFICATE

[2] Equipment or Protected System Intended for use in Potentially explosive atmospheres Directive 94/9/EC

[3] EC-Type Examination Certificate Number: Nemko 04ATEX1246X

[4] Equipment or Protective System: Intrinsically safe manual call point

[5] Applicant & Manufacturer: Consilium Fire & Gas AB

[6] Address: Box 8763
SE-40276 Göteborg
SWEDEN

[7] This equipment or protective system and any acceptable variation thereto is specified in the schedule to this certificate and the documents therein referred to.

[8] Nemko AS, notified body number 0470 in accordance with Article 9 of Council Directive 94/9/EC of 23 March 1994, certifies that this equipment or protective system has been found to comply with the Essential Health and Safety requirements relating to the design and construction of equipment and protective systems intended for use in potentially explosive atmospheres given in Annex II to the Directive.

The examination and test results are recorded in confidential report no. 21582

[9] Compliance with the Essential Health and Safety Requirements has been assured by compliance with:

CENELEC EN 50014: 1997 + A1: 1999 + A2: 1999 and CENELEC EN 50020: 2002

[10] If the sign "X" is placed after the certificate number, it indicates that the equipment or protective system is subject to special conditions for safe use specified in the schedule to this certificate.

[11] This EC-TYPE EXAMINATION CERTIFICATE relates only to the design, examination and tests of the specified equipment or protective system in accordance to the directive 94/9/EC.
Further requirements of the Directive apply to the manufacturing process and supply of this equipment or protective system. These are not covered by this certificate.

[12] The marking of the equipment or protective system shall include the following:

II 1 G **EEx ia IIC T5 Ta: 50°C**

This Certificate replaces previously issued Certificate with same Certificate number dated 2004-06-11, due to mistyping

Oslo, 2006-02-27

Rolf Hoel
Certification Department

This certificate may only be reproduced in its entirety and without any change, schedule included.

Postal address:
P.O.Box 73 Blindern
N-0314 OSLO, NORWAY

Office address:
Gaustadalléen 30
0373 OSLO

Telephone:
+47 22 96 03 30
Fax:
+47 22 96 05 50

Enterprise number:
NO 974404532

[13] Schedule

[14] EC-TYPE EXAMINATION CERTIFICATE No Nemko04ATEX1246X

[15] Description of Equipment or Protective System

Salwico ACP-IS is an intrinsically safe addressable manual call point for the fire alarm systems CS3000, CS4000 and NSAC-1.

Salwico ACP-IS is connected to the detector loop via ISOLATOR-A, and is coded: EEx ia IIC T5. Up to 20 addressable IS units can be connected to an ISLOLATOR-A

Pressing the glass causing it to crack activates the fire alarm. The call point can also be tested with a special key, included in the delivery.

A red LED on the front of the call point indicates the fire alarm. The LED remains lit until the glass has been replaced and the fire alrm has been reset on the control panel.
The address of the call point is set with a DIP-switch.

Type Designation
Salwico ACP-IS

Safety Data

Maximum input voltage.	U_i:	28VDC
Maximum input current.	I_i:	2.5mA
Maximum input power.	P_i:	0.07W
Maximum internal capacitance	C_i:	33pF
Maximum internal inductance	L_i:	Negligible

The output circuit of the supply diode safety barrier shall have a linear resistive characteristic.

Range of Ambient Temperature

Ta: -40°C to +50°C

This certificate may only be reproduced in its entirety and without any change, schedule included.

Postal address:
P.O.Box 73 Blindern
N-0314 OSLO, NORWAY

Office address:
Gaustadalléen 30
0373 OSLO

Telephone:
+47 22 96 03 30
Fax:
+47 22 96 05 50

Enterprise number:
NO 974404532

[16] Report No. 21582

Descriptive Documents

Name/Title	Drawing No.	Rev.	Date	Sheets
Label manual call point ACP-IS	S-4-010.984	R1	2004.04.27	1
Connection drawing manual call point ACP-IS	S-4-010.980	A	2004.04.02	1
Assembly drawing manual call point ACP-IS	S-4-010.977	A	2004.04.02	1
Demention drawing manual call point ACP-IS	S-4-010.978	A	2004.04.02	1
Printing instructions manual call point ACP-IS	S-4-010.983	A	2004.04.05	1
Component cover manual call point ACP-IS	S-4-010.979	A	2004.04.05	1
Salvico ACP-IS	S-4-010.987	R1C	2004.05.27	1
Component location ACP-IS	S-4-010.988	REV3	2004.05.27	1
PCB layer 1 ACP-IS	S-4-010.993	REV3	2004.05.27	1
PCB layer 2 ACP-IS	S-4-010.993	REV3	2004.05.27	1
PCB layer 3 ACP-IS	S-4-010.993	REV3	2004.05.27	1
PCB layer 4 ACP-IS	S-4-010.993	REV3	2004.05.27	1
Drill drawing ACP-IS	S-4-010.994	1	2004.04.01	1
Approved parts list for ACP-IS	S-4-010.996	--	2004.05.25	3
Bill of materials ACP-IS	S-4-010.986	--	2004.05.25	2
Data sheet	60060-001010.04.3.S	R2	2004.05.12	1
Mounting instruction	60060-001010	R1	2004.03.29	1
Data sheet	60060-001010.04.4.E	R3	2004.06.08	1
Assembling instruction	60060-001010	R1	2004.03.29	1

[17] Special Conditions for Safe Use

The enclosure must only be cleaned with a damp cloth in order to avoid ignition hazard caused by static electricity.

[18] Essential Health and Safety Requirements

See item 9

This certificate may only be reproduced in its entirety and without any change, schedule included.

Postal address:
P.O.Box 73 Blindern
N-0314 OSLO, NORWAY

Office address:
Gaustadalléen 30
0373 OSLO

Telephone:
+47 22 96 03 30
Fax:
+47 22 96 05 50

Enterprise number:
NO 974404532

1 # EC-TYPE EXAMINATION CERTIFICATE

2 **Equipment or Protective System Intended for use in Potentially Explosive Atmospheres Directive 94/9/EC**

3 EC-Type Examination Certificate Number : **BAS00ATEX7087**

4 Equipment or Protective System: **DUAL CHANNEL SMART FIRE DETECTOR ISOLATOR TYPE K*D0-CS-Ex2.54**

5 Manufacturer: **PEPPERL + FUCHS GB LTD**

6 Address: **Oldham, Lancashire, OL1 4EL**

7 This equipment or protective system and any acceptable variation thereto is specified in the schedule to this certificate and the documents therein referred to.

8 The Electrical Equipment Certification Service, notified body number 600 in accordance with Article 9 of the Council Directive 94/9/EC of 23 March 1994, certifies that this equipment or protective system has been found to comply with the Essential Health and Safety Requirements relating to the design and construction of equipment and protective systems intended for use in potentially explosive atmospheres given in Annex II to the Directive.

The examination and test results are recorded in confidential Report N°

00(C)0160 dated 13 June 2000

9 Compliance with the Essential Health and Safety Requirements has been assured by compliance with:

EN 50014: 1997 + Amds 1 and 2 **EN 50020: 1994**

except in respect of those requirements listed at item 18 of the Schedule.

10 If the sign "X" is placed after the certificate number, it indicates that the equipment or protective system is subject to special conditions for safe use specified in the schedule to this certificate.

11 This EC-TYPE EXAMINATION CERTIFICATE relates only to the design and construction of the specified equipment or protective system. If applicable, further requirements of this Directive apply to the manufacture and supply of this equipment or protective system.

12 The marking of the equipment or protective system shall include the following:-

Ex II (1) GD [EEx ia] IIC (T_{amb} = -20°C to +60°C)

This certificate may only be reproduced in its entirety and without any change, schedule included.

File No: EECS 0807/02/182

This certificate is granted subject to the general conditions of the Electrical Equipment Certification Service. It does not necessarily indicate that the apparatus may be used in particular industries or circumstances.

HSE Health & Safety Executive

Electrical Equipment Certification Service
Health and Safety Executive
Harpur Hill, Buxton, Derbyshire, SK17 9JN, United Kingdom
Tel: +44(0)1298 28000 Fax: +44(0)1298 28244
internet: www.baseefa.com e-mail: baseefa.info.eecs@hsl.gov.uk

I M CLEARE
DIRECTOR
17 July 2000

Re-issued 7 February 2001 to delete the Special Condition for Safe Use

13 **Schedule**

14 **EC-TYPE EXAMINATION CERTIFICATE N° BAS00ATEX7087**

15 **Description of Equipment or Protective System**

The Dual Channel Smart Fire Detector Isolator Type K*D0-CS-Ex2.54 is designed to provide a galvanically isolated interface to enable the connection of apparatus located in a hazardous area with apparatus located in a non-hazardous area by providing galvanic isolation and limiting to intrinsically safe levels the voltage and current into the hazardous area.

The apparatus comprises a number of electrical components, including transformers, fuses, resistors and zener diodes, all mounted on a single printed circuit board (PCB) and housed within a plastic enclosure.

The use of '*' in the type designation K*D0-CS-Ex2.54 represents either H for screw terminal connections, or F to indicate the use of FIM type plug in connectors with an alternative enclosure to accommodate the plugs and sockets.

The apparatus is designed to operate from a d.c. supply of up to 40V on terminals 11 and 12 and on terminals 8, 9 and 10. The segregation of the hazardous area circuits meets the requirements for 250V.

Input/Output Parameters

$U_m = 250V$
(Terminals 11 and 12 and terminals 8,9, and 10)

$U_o = 28V$ $I_o = 93mA$ $P_o = 653mW$
(Terminals 1 and 2 and terminals 4 and 5)

The capacitance and either the inductance or the inductance to resistance ratio (L_O/R_O) of the load connected to the output terminals of each channel must not exceed the following values:

GROUP	CAPACITANCE in µF	INDUCTANCE in mH	OR L/R RATIO in µH/ohm
IIC	0.077	4.3	55
IIB	0.64	17	199
IIA	2.14	35	431

13 **Schedule**

14 **EC-TYPE EXAMINATION CERTIFICATE N° BAS00ATEX7087**

VARIATION ONE

To permit the deletion of channel two from the type K*D0-CS-Ex2.54 thus forming the Smart Fire Detector Isolator Type type K*D0-CS-Ex1.54.

Input/Output Parameters

U_m = 250V
(Terminals 11 and 12)

U_o = 28V I_o = 93mA P_o = 653mW
(Terminals 1 and 2)

The capacitance and either the inductance or the inductance to resistance ratio (L_O/R_O) of the load connected to the output terminals must not exceed the following values:

GROUP	CAPACITANCE in µF	INDUCTANCE in mH	OR	L/R RATIO in µH/ohm
IIC	0.077	4.3		55
IIB	0.64	17		199
IIA	2.14	35		431

VARIATION TWO

To permit an alternative circuit thus forming the The Dual Channel Smart Fire Detector Isolator Type KFD0-CS-Ex2.54-Y72222

Input/Output Parameters

U_m = 250V
(Terminals 11 and 12 and terminals 8,9, and 10)

U_o = 25.2V I_o = 43mA P_o = 271mW
(Terminals 1 and 2 and terminals 4 and 5)

The capacitance and either the inductance or the inductance to resistance ratio (L_O/R_O) of the load connected to the output terminals of each channel must not exceed the following values:

GROUP	CAPACITANCE in µF	INDUCTANCE in mH	OR	L/R RATIO in µH/ohm
IIC	0.101	19.6		138
IIB	0.81	72		508
IIA	2.89	153		964

13 **Schedule**

14 **EC-TYPE EXAMINATION CERTIFICATE N° BAS00ATEX7087**

VARIATION THREE

To permit the use of an alternative circuit and the deletion of channel two from the type KFD0-CS-Ex2.54 thus forming the Smart Fire Detector Isolator Type KFD0-CS-Ex1.54-Y72221.

Input/Output Parameters

$U_m = 250V$
(Terminals 11 and 12)

$U_o = 25.2V$ $I_o = 43mA$ $P_o = 271mW$
(Terminals 1 and 2)

The capacitance and either the inductance or the inductance to resistance ratio (L_O/R_O) of the load connected to the output terminals must not exceed the following values:

GROUP	CAPACITANCE in µF	INDUCTANCE in mH	OR	L/R RATIO in µH/ohm
IIC	0.101	19.6		138
IIB	0.81	72		508
IIA	2.89	153		964

16 **Report Nos.**

00(C)0160

17 **Special Conditions For Safe Use**

None.

18 **Essential Health and Safety Requirements**

ESSENTIAL HEALTH & SAFETY REQUIREMENTS not covered by Standards listed at (9)		
Clause	**Subject**	**Compliance**
1.1.3	Changes in characteristics of materials and combinations thereof	Report No 00(C)0160 Clause 5.1.1.3
1.2.2	Components for incorporation or replacement	Report No 00(C)0160 Clause 5.1.2.2
1.2.5	Additional means of protection	Report No 00(C)0160 Clause 5.1.1.5
1.2.7	Protection against other hazards	Report No 00(C)0160 Clause 5.1.2.7
1.4.2	Withstanding attack by aggressive substances	Report No 00(C)0160 Clause 5.1.4.2

13 **Schedule**

14 **EC-TYPE EXAMINATION CERTIFICATE N° BAS00ATEX7087**

19 **DRAWINGS**

Number	Issue	Date	Description
251-0412B	B	01.03.00	Circuit Diagram
252-1131F Sheets 1 to 5	F	13.03.00	Parts List, Single Channel
252-1070F Sheets 1 to 7	F	13.03.00	Parts List, Two Channel
255-1036F Sheets 1 to 3	F	31.01.00	PCB Master
257-0208A Sheets 1 & 2	A	03.02.00	PCB Lacquer details, Two Channel
257-0212A Sheets 1 & 2	A	08.05.00	PCB Lacquer details, Single Channel
253-0236A	A	31.01.00	Component Overlay
252-1130B	B	09.02.00	Parts list, Transformer
256-0120A	A	11.02.00	Winding Details
255-0751C Sheets 1 & 2	C	14.01.99	PCB Master, Transformer
254-0263A	A	16.06.98	Plastic Moulding details
255-0698B	B	11.06.99	Cutting/Drilling Details
256-0065C	C	11.02.00	Transformer Connection Details
254-0284B Sheets 1 & 2	B	15.02.00	GA , FIM Housing
254-0299A Sheets 1 & 2	A	15.02.00	GA, Transformer Isolated Barriers
260-1380B	B	2.1.01	Label, KHD0-CS-Ex1.54
260-1381B	B	3.1.01	Label, KFD0-CS-Ex1.54
260-1382B	B	3.1.01	Label, KHD0-CS-Ex2.54
260-1383B	B	3.1.01	Label, KFD0-CS-Ex2.54
260-1384B	B	3.1.01	Label, KFD0-CS-Ex1.54-Y72221
260-1385B	B	3.1.01	Label, KFD0-CS-Ex2.54-Y72222

This certificate may only be reproduced in its entirety and without any change, schedule included.

BASEEFA List Keywords
2ISOLBAR

1 # SUPPLEMENTARY EC-TYPE EXAMINATION CERTIFICATE

2 **Equipment or Protective System Intended for use in Potentially explosive atmospheres Directive 94/9/EC**

3 Supplementary EC-Type Examination Certificate Number: **BAS00ATEX7087/1**

4 Equipment or Protective System: **DUAL CHANNEL SMART FIRE DETECTOR ISOLATOR TYPE K*D0-CS-Ex2.54**

5 Manufacturer: **PEPPERL + FUCHS GB LTD**

6 Address: **Oldham, Lancashire, OL1 4EL**

7 This supplementary certificate extends EC-Type Examination Certificate No. BAS00ATEX7087 to apply to equipment or protective systems designed and constructed in accordance with the specification set out in the Schedule of the said Certificate but having any variations specified in the Schedule attached to this certificate and the documents therein referred to.

This Supplementary Certificate shall be held with the original Certificate.

This certificate may only be reproduced in its entirety and without any change, schedule included.

File No: EECS 0807/02/182

This certificate is granted subject to the general conditions of the Electrical Equipment Certification Service. It does not necessarily indicate that the apparatus may be used in particular industries or circumstances.

HSE Health & Safety Executive

Electrical Equipment Certification Service
Health and Safety Executive
Harpur Hill, Buxton, Derbyshire, SK17 9JN, United Kingdom
Tel: +44(0)1298 28000 Fax: +44(0)1298 28244
internet: www.baseefa.com e-mail: baseefa.info.eecs@hsl.gov.uk

I M CLEARE
DIRECTOR
22 March 2001

13 **Schedule**

14 **SUPPLEMENTARY EC-TYPE EXAMINATION CERTIFICATE N° BAS00ATEX7087/1**

Description of the Variation to the Equipment or Protective System

VARIATION 1.1

To permit an alternative printed circuit board coating pattern for the Types K*D0-CS-Ex1.54 and KFD0-CS-Ex1.54-Y72221.

Report No.

None

Special Conditions For Safe Use

None

Essential Health and Safety Requirements

See original certificate.

DRAWINGS

Number	Sheet	Issue	Date	Description
257-0212B	1 & 2	B	14.02.01	PCB Lacquer Details, Single Channel

This certificate may only be reproduced in its entirety and without any change, schedule included.

1 # SUPPLEMENTARY EC-TYPE EXAMINATION CERTIFICATE

2 **Equipment or Protective System Intended for use in Potentially explosive atmospheres Directive 94/9/EC**

3 Supplementary EC-Type Examination Certificate Number: **BAS00ATEX7087/2**

4 Equipment or Protective System: **DUAL CHANNEL SMART FIRE DETECTOR ISOLATOR TYPE K*D0-CS-Ex2.54**

5 Manufacturer: **PEPPERL + FUCHS GB LTD**

6 Address: **Oldham, Lancashire, OL1 4EL**

7 This supplementary certificate extends EC-Type Examination Certificate No. BAS00ATEX7087 to apply to equipment or protective systems designed and constructed in accordance with the specification set out in the Schedule of the said Certificate but having any variations specified in the Schedule attached to this certificate and the documents therein referred to.

This Supplementary Certificate shall be held with the original Certificate.

This certificate may only be reproduced in its entirety and without any change, schedule included.

File No: EECS 0807/02/182

This certificate is granted subject to the general conditions of the Electrical Equipment Certification Service. It does not necessarily indicate that the apparatus may be used in particular industries or circumstances.

HSE Health & Safety Executive

Electrical Equipment Certification Service
Health and Safety Executive
Harpur Hill, Buxton, Derbyshire, SK17 9JN, United Kingdom
Tel: +44(0)1298 28000 Fax: +44(0)1298 28244
internet: www.baseefa.com e-mail: baseefa.info.eecs@hsl.gov.uk

I M CLEARE
DIRECTOR
29 November 2001

13 Schedule

14 SUPPLEMENTARY EC-TYPE EXAMINATION CERTIFICATE N° BAS00ATEX7087/2

Description of the Variation to the Equipment or Protective System

VARIATION 2.1

To permit minor changes to component values in non-critical areas of the circuit. These changes do not affect compliance with the standards.

Report No.

None.

Special Conditions For Safe Use

None

Essential Health and Safety Requirements

See original certificate.

DRAWINGS

Number	Sheet	Issue	Date	Description
251-0412C		C	14.11.01	Circuit
252-1131G	1 to 5	G	14.11.01	Parts List, Single Channel
252-1070G	1 to 7	G	14.11.01	Parts List, Two Channel

This certificate may only be reproduced in its entirety and without any change, schedule included.

Manual

Consilium

Salwico Cargo Addressable

Fire Detection System

Installation Manual

Consilium Marine & Safety AB
Fire & Gas Marine Division
Phone: +46 31 710 77 00
Fax: +46 31 710 78 00
E-mail: Service: service@consilium.se
Spares: spares@consilium.se

Consilium Marine & Safety AB
Navigation Division
Phone: +46 8 563 05 100
Fax: +46 8 563 05 199
E-mail: Service, APT: service-navigation@consilium.se
Spares: spares-navigation@consilium.se

Consilium Marine & Safety AB
Transport Division
Phone: +46 31 710 77 00
Fax: +46 31 710 78 00
E-mail: Service: transport@consilium.se
Spares: transport@consilium.se

The contents of this document are subject to revision without notice due to continued progress in methodology, design and manufacturing. Consilium assumes no legal responsibility for any error or damage resulting from the usage of this document.

April 2013
Document no. 5100333-01_Salwico Cargo Addressable_Installation Manual_M_EN_2013_H
Part no. 5100333-01

© Copyright 2013, Consilium Marine & Safety AB

1 Introduction 1

1.1 About this Manual 1

1.2 Symbols used in the manual 2

1.3 Approvals 3

2 General Description 5

2.1 System Description 5

2.2 System Block Diagram 5

2.3 System Data 6

3 Installation 7

3.1 Prerequisites for Installation 7

3.2 Mechanical Installation 7

3.2.1 Installation Order 7
3.2.2 Control Panels 7
3.2.3 Loop Units 7
3.2.4 Mounting of Modules on a DIN rail 7

3.3 Electrical Installation 8

3.3.1 Cable Requirements 8
3.3.2 Loop Lengths 8
3.3.3 Detector Loops 10
3.3.4 Connection to Loop Module, type Loop M X 12
3.3.5 Connection to Zone Module, type I/O M 70 13
3.3.6 Test the Cable 13
3.3.7 Setting the Address on Loop Units 16
3.3.8 Instructions for Address Programming Tool 17
3.3.9 Setting the Address on Repeater M 4.3 18
3.3.10 Electrical Installation, Central Equipment 18

4 Verification 21

4.1 Prerequisites for Verification 21

4.2 Loops 21

4.2.1 Verification of Loops 21
4.2.2 Testing of System Parts .....

4.3 Trouble Shooting .....

4.3.1 Polarity Fault .....
4.3.2 Wrong Number of Loop Units (only for Addressable Loops on Loop M X) .....
4.3.3 Cable Break .....
4.3.4 Earth Fault .....
4.3.5 Short Circuit .....
4.3.6 Muting Faults .....
4.3.7 Reset Faults .....
4.3.8 Installation Mode .....
4.3.9 Upgrade Firmware .....

4.3.10 Upgrading Large Systems 32
4.3.11 Save the system log to a USB memory stick 34
4.3.12 How to report a fault 35

5 Commissioning Requirements 37

5.1 Prerequisite 37

5.2 Loop Requirements 37

5.3 Part A: Loop Configuration 37

5.4 Part B: Loop Status 37

5.5 Part C: Central Status 38

5.6 Summary 38

6 Fire Detection Installation Guidelines 39

6.1 Loop Units Installation Guidelines 39
6.1.1 General Comments when Installing Fire Detectors 39
6.1.2 Smoke Detectors 39
6.1.3 Heat Detectors 40
6.1.4 Flame Detectors 40
6.1.5 IS Smoke Detector for EX Areas 41
6.1.6 Conventional High Temperature Heat Detectors 41
6.1.7 Cold Room Heat Detectors 42
6.1.8 Address Units 42
6.1.9 Manual Call Points 42
6.1.10 Short Circuit Isolator 42
6.1.11 Timers 43
6.1.12 Bells 43
6.1.13 Electrical Siren 43
6.1.14 Door Holder Magnet 65kp (650N) 43
6.1.15 Door Holder Magnet 130kp (1300N) 43
6.1.16 Door Release Switch 43

6.2 Cabling and Electrical Installation 44
6.2.1 Cable Types 44
6.2.2 Cable Protective Tubes of Metal .....
6.2.3 Cable Protective Tubes of Plastic .....
6.2.4 Cabling .....
6.2.5 Cable Inlets to Equipment .....
6.2.6 Fixing of Cables .....
6.2.7 Markings .....
6.2.8 Cable Ends .....
6.2.9 Protective Earthings .....
6.2.10 Location of Electrical Equipment .....

7 Appendix .....

7.1 General alarm on the CCP panel .....

7.2 EN54 Functions .....

7.3 Address List and Test Report .....

7.4 ID List .....

7.4.1 Prerequisite 55
7.4.2 Setting the ID 55
7.4.3 ID for NS-AIN type Address Units 55
7.4.4 ID for AE type Address Units 56

7.5 Connections for Loop Units 56

7.6 Central Unit Terminal & Cabling Layout 59

7.7 RS485 Termination 61
7.7.1 General Recommendations for Installation of RS485 61
7.7.2 Application Examples for Installation of RS485 61

7.8 Fault Code List 64

7.9 Definitions of Terms 70

Index 74

1 Introduction

1.1 About this Manual

This manual is intended for personnel installing a fire detection system.

NOTE!
This user guide has been revised based on version 1.6.0 but is valid for Control panel software versions beginning with version 1.0.0.

Chapter General Description gives an overview of the system.

Chapter Installation describes the complete electrical installation process of the loop units. The installation engineer does not need to have any previous knowledge of this particular system to be able to perform an installation.

Chapter Verification describes how to test the installed system. After the installation is completed, the system is verified, which must be performed by a person with good knowledge of the various functions. This chapter also includes verification and troubleshooting.

Chapter Commissioning Requirements describes the steps to be taken by the installation organisation before a commissioning engineer can be sent from the commissioning organisation.

Chapter Fire Detection Installation Guidelines gives general recommendations for installing a fire detection system.

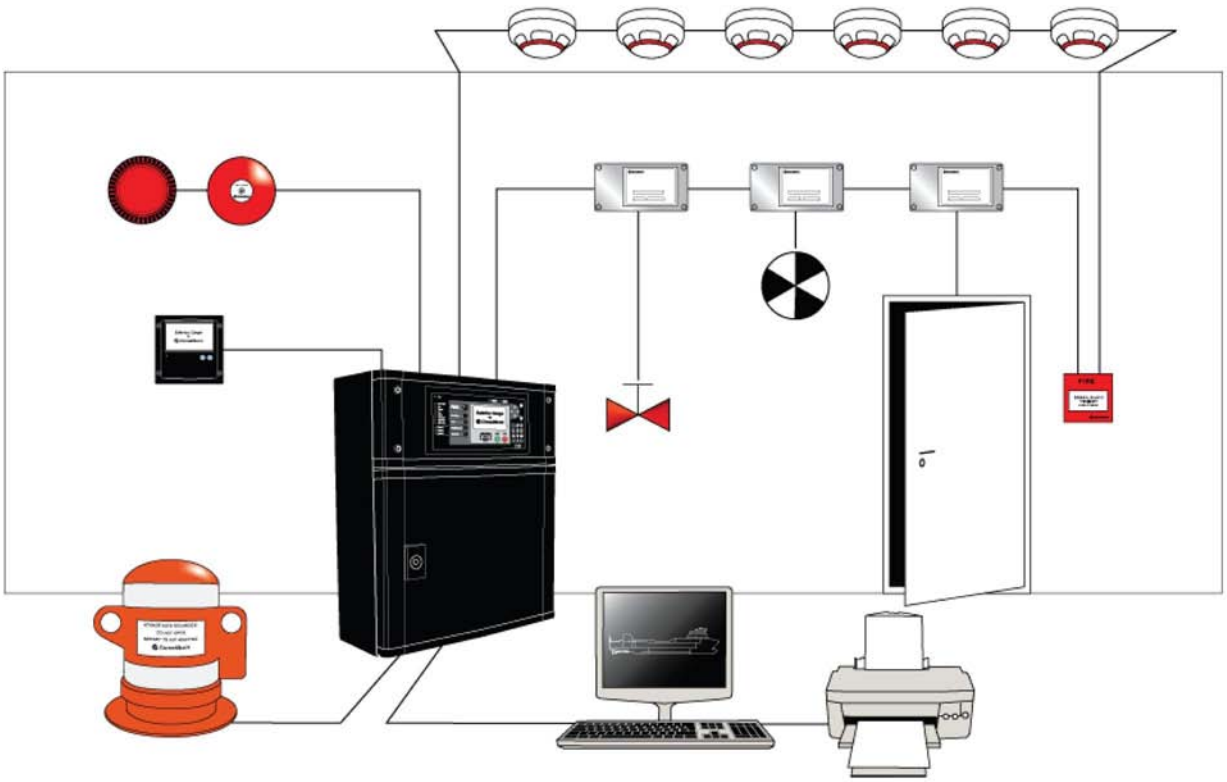

Figure 1. Salwico Cargo Fire Detection System, an example.

Risk of serious or fatal injury to the user, and/or severe damage to the product, if the instructions are not followed.

Risk of personal injury and/or damage to the product if the instructions are not followed.

! "
Risk of minor or moderate personal injury. Risk of equipment damage, loss of data, extra work, or unexpected results, if the instructions are not followed.

Note symbols alert you to important facts and conditions.

#
Tip symbols direct you to specific instructions, such as where to find additional information and tell you how to perform a certain operation in an easier way.

1.3 Approvals

0845

2 General Description

2.1 System Description

This Fire detection system is a state-of-the-art, analogue-addressable, fire-detection system designed to meet marine, industrial and transport requirements. Special care is given to ergonomics and user-friendliness with its logical and intuitive operator panel.

2.2 System Block Diagram

The following figure shows a typical system and its connected components, see Definitions of Terms, page 70 in the Appendix for explanation of terms and abbreviations.

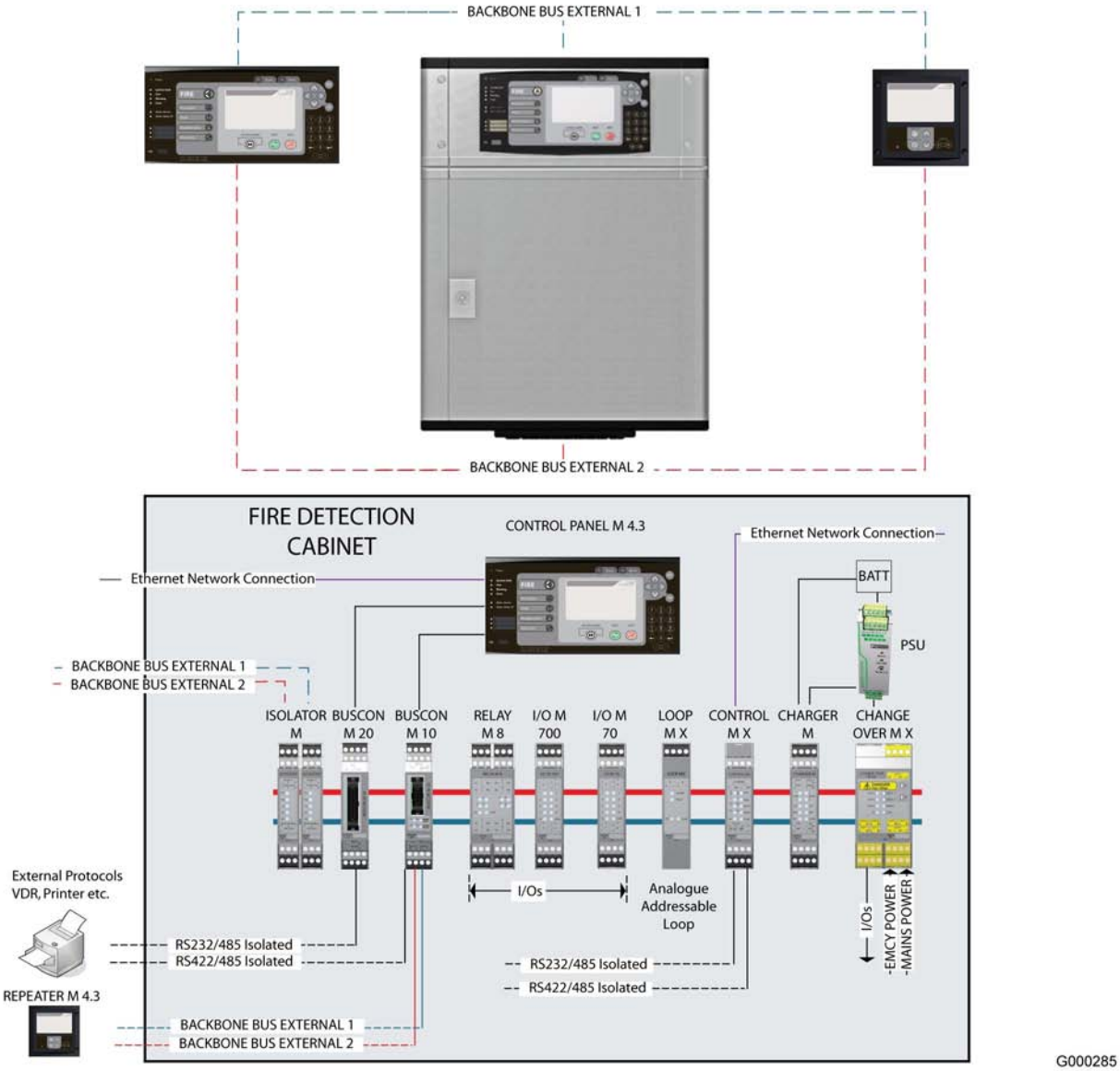

2.3 System Data

System Data	Specifications
Supply voltage	84–264 VAC / 90-350 VDC
Power consumption. Depending of system configuration.	
Internal system voltage	19–30 VDC
Central panel ingress protection	Depending on cabinet
Number of loop units in one central	16256
Number of loop units on one addressable detector loop	Max 254
Number of addressable detector loops on loop module, Loop M X	1
Number of conventional detector sections per module, I/O M 70	8
Number of inputs/outputs per module, I/O M 700	8
Number of modules in one central (max 64 Loop M X)	max 125
MCS Multi Central System	max 30 SCS
Number of control panels in one central	max 8
Number of repeaters on BackBoneBus (type Control M 4.3, Control/Repeater M 4.3, Control M 2.2, Control M X, Repeater M 4.3)	max 8
Number of repeaters on extension bus (type Repeater M 4.3)	max 14 / external bus
Number of zones in a system	1-9999
Communication parameters for the external system channel	RS485, 19200 Baud, Odd parity, 8 data bits

NOTE!
System boot-time is kept to a minimum during normal operation, but it can be extra-long after a new installation, commissioning or major maintenance work (depending on the configuration of the data definition file).

Hint!
For detailed requirements, refer to the data sheets.

3 Installation

3.1 Prerequisites for Installation

CAUTION!
The installation of the Fire detection system must be performed according to SOLAS and FSS requirements.

The different parts of the system, the control and system modules, should first be mechanically installed. The different loop units are thereafter electrically installed and set up according to the definition of the loops and drawings.

The cables must be tested separately before the loops are connected to the loop module. This eliminates any problem with the cable and electrical installation of the loop units.

The installation is completed with the electrical installation of the the control and system modules.

3.2 Mechanical Installation

3.2.1 Installation Order

Install the control panel and central cabinet according to their drawings. The Control Panel M 4.3 is delivered in one of two ways - installed in the Fire detection cabinet or as a separate unit. Separate drawings are delivered with the system.

3.2.2 Control Panels

The external control panels are delivered in cabinets (IP32) for wall or console mounting. Separate drawings are delivered with the system. Install the panels indoors in areas in 0–80% RH non-condensing conditions and within a temperature range of 0ºC to 50ºC.

3.2.3 Loop Units

A loop unit can be connected to a loop or to a conventional zone.

The mechanical installation of the different types of loop and zone units are described in their respective data sheets.

3.2.4 Mounting of Modules on a DIN rail

Mount the module horizontally on a 35 mm DIN rail.

- Mount one module support on each side.
- Squeeze the whole package together and tighten the screws on the supports.

3.3 Electrical Installation

3.3.1 Cable Requirements

Backbone Bus External (BBE)

See figure in section System Block Diagram, page 5.

The cables connecting from the backbone bus to the control panels or stretched central part must meet the following requirements:

Channel 1 & 2

- Min 2 x 2 x 0.3 mm^2, twisted pair shielded
  (RS485 + backup signal, one conductor)

  NOTE!
  The backup signal is only needed for one channel. (The back up signal is optional.)
- Max allowed cable length is 700 m
- Optional: Power supply (24 VDC) 1 x 2 x 0.75 mm^2
  Refer to the system connection drawing

NOTE!
Channel 1 and Channel 2 should be routed separately for improved safety if both channels are used.

Detector loops

Detector loop cables must meet the following minimum requirements. We refer to current regulations for the rest of the specification.

Min. 2 × 0.3 mm^2

Min. 2 × 0.3 mm^2

3.3.2 Loop Lengths

A loop or sub-loop's length depends on three parameters:

- cable type
- shielded or unshielded cable
- power consumption

A cable is considered shielded if the shielded part is more than 10% of the cable's total length.

CAUTION!
Never exceed the recommended cable lengths as listed in table Loop cable lengths.

Loop units are divided into three types. These types (1, 2 and 3) are based on the individual load on the loop.

Type 1A: Max capacity

- ACPWP-Exn
- AIN2
- AOHS-Exn
- EV-BI, EV-DP, EV-DPH, EV-H 54, EV-H 84, EV-P, EV-PH and EV-PS
- EV-MCP2
- NS-ACP, NS-ACPWP, NS-AH/A1S, NS-AH/CS, NS-AIHS, NS-AIS, NS-AOHS, NS-AOS and NS-TIMAC
- SPB-BI

Type 1B: Max capacity

- AC-IR-3Fq incl Addr Base
- ASP (The type class for the ASP unit will be the same as the included detector.)
- EV-PP (all variants)
- OA100-OA140
- IA100-IA140
- IA130 2T
- KS-2 and KS-2K
- LK-2 and LK-2K
- MCP-A
- NS-SCI
- RDJ-2
- RDO-2
- SCI-A
- SID-38
- UR-2K and UR-2K/N
- VE-2
- VL-2 and VL-2K

Type 2: Reduced capacity level 1

- AE-2 and AE-2K, configured as a sprinkler (ID 107, 120, 121, 125 and 126), heat detector (127), door indication (117), manual call point (116) and sub central (114)
- AE-2E with separate power supply
- AIN1/100 and NS-AIN1 ID3
- AIO21 and AIO21/DD
- CM 20-44
- CSS3300 rectifier

- NS-AOHS-IS, NS-AOS-IS, NS-AOS-IS-NA and NS-AUV
- RDJ-2T
- SID-38T
- TDT-2 and TDT-2K, rate-of-rise 57ºC and rate-of-rise 86ºC

Type 3: Reduced capacity level 2

- All address units with a constant voltage output on the sub-loop (except AE-2E with separate power supply)
- AE-2 and AE-2K, configured as smoke detector (ID 111 and 124), flame detector, IR, (ID 123) and heat detector with constant output on the sub-loop (ID 118)
- AE-2K/I, configured as flame detector, UV, (ID 119) and ISIF (ID 99)
- NS-AIN1 ID2

!

Load	Unshielded cable	Shielded cable
Only type 1A units on the loop	Max. number of units = 254 Max. cable length = 3000 m*	Max. number of units = 254 units Max. cable length = 2000 m
Loops with more than 50 pcs of type 1B	Max. number of units = 150 Max. cable length = 3000 m*	Max. number of units = 150 Max. cable length = 2000 m
Only type 1 and type 2 units on the loop	Max. number of units = 100 Max. cable length = 3000 m*	Max. number of units = 100 Max. cable length = 2000 m
Type 3 units on the loop	Max. type 3 units = 10 Max. total units (any type) = 100 Max. cable length = 2000 m**	Max. type 3 units = 3 Max. total units (any type) = 100 Max. cable length = 1000 m

* Using min. a 0.75 mm^2 cable, otherwise max. 2000 m.

** Using min. a 0.75 mm^2 cable, otherwise max. 1000 m.

NOTE!
When calculating the number of loop units, consider the future expansion of new loop units. Make sure there are at least 10% in spare addresses evenly distributed among the intervals between short circuit isolators.
For example, if using type 1A loop units:
254 addresses x 0.9 = Max. 228 loop units/loops.

CAUTION!

Under investigation, preliminary limitations: The maximum no. of above units to be mounted on any loop are 20 sounders and 35 devices of short circuit isolators (short circuit isolators or units with built-in short circuit isolator).

3.3.3 Detector Loops

A loop may contain different types and different numbers of loop units. The connection to the loop depends on the type of loop unit and the configuration of

your system. Some of the loop units are connected directly to the loop and some are connected through address units.

Figure 3. Example of a detector loop with addressable loop units. illustrates an addressable detector loop.

Figure 4. Example of a detector zone with conventional non-addressable loop units. illustrates a conventional detector zone.

For more details about their connection, see Connections for Loop Units, page 56.

The information about the electrical installation of each type of loop unit is provided in its respective data sheet.

NOTE!

- Set the address switch on each loop unit before connecting them to the loop. If an address unit is used, set its ID switch. See Setting the Address on Loop Units, page 16 later in this chapter and also Address List and Test Report, page 52 and ID List, page 55.
- Bypass all separate short circuit isolators (if there are any in the setup) before testing the loop. Join the cores leading to terminals 2 and 4 and the cores leading to terminals 1 and 3 using a temporary connector block inside the short circuit isolators.

CAUTION!

Do not remove dust protection covers from the smoke detectors until all polluting activities (such as construction work) are finished and the area has been cleaned.

3.3.4 Connection to Loop Module, type Loop M X

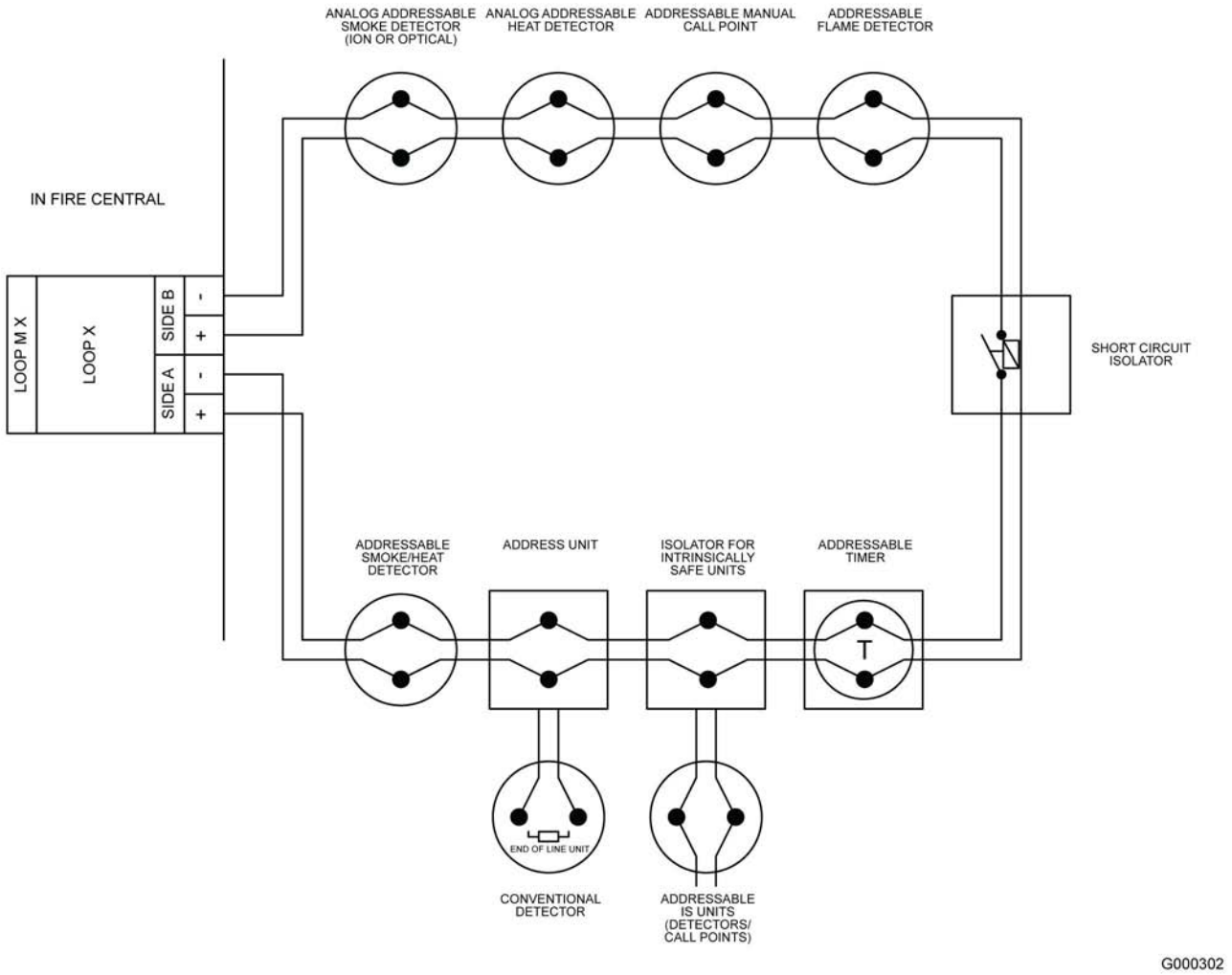

" #

3.3.5 Connection to Zone Module, type I/O M 70

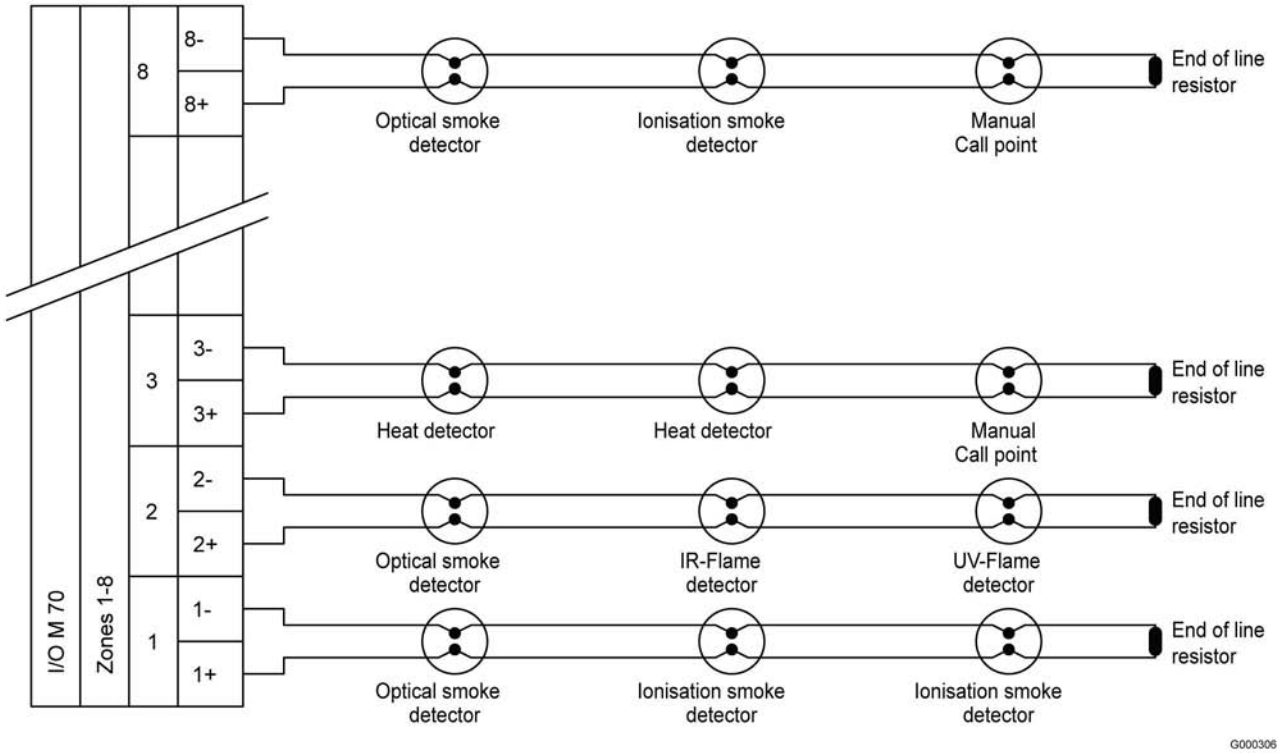

$ # % & '

A zone should in any case include no more than 50 enclosed spaces.

3.3.6 Test the Cable

3.3.6.1 Prerequisites for Testing the Cable

The cable should be tested for proper function after all the loop units are connected and before the cable is connected to the central unit.

The cable can only be tested if all short circuit isolators are bypassed.

3.3.6.2 Test 1: Test for Cable Break

CAUTION!
When loop units are connected, it is not allowed to use an insulation tester with a voltage exceeding 30 V.

Measure the resistance between the + and - poles. Connect an ohm-meter between the + poles as shown in the following figure. Measure and repeat the procedure for the - poles.

The measured value should be less then 185 Ohm for a cable with a maximum length of 3 km.

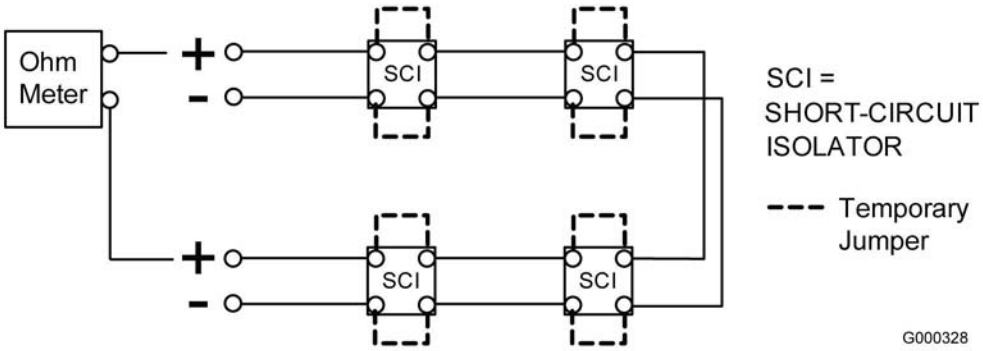

Figure 5. Test for cable break

Proceed as follows to locate the cable break on addressable loops:

1	List the loop units for the current loop under: *Menu » 6 Service Menu » 5 Loops*	
2	Press “ ” to list all loop units located on this loop. Each loop unit will report on which side A (primary) or B (secondary) it answers: OK (A/B) = Answer on both sides. OK (A/-) = Answer only on A side. OK (-/B) = Answer only on B side. OK (?/?) = The loop unit answers but the loop module doesn’t know on which side until an update is made. Press “1. Update list” to perform an update. No answer (-/-) = The loop unit does not answer on either side.	If the list reports (?/?) the answering side status will be updated if pressing “1. Update list”. The system will scan the loop to determine answering side. The loop is disabled during the scan and the procedure may take several minutes (access code 3 is required).

The cable break is located between the “last” unit on the A side and the “first” unit on the B side.

$ $; $ 3 * !

! "

When loop units are connected, it is not allowed to use an insulation tester with a voltage exceeding 30 V.

Measure the resistance between the + pole and the - pole. Connect an ohm-meter between the two poles, as shown in the following figure.

The measured value should be more than 100 kOhm for a cable with a maximum length of 3 km.

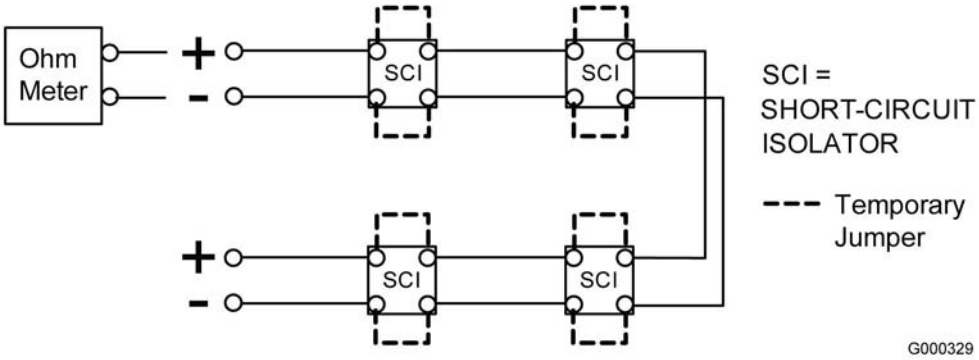

Figure 6. Test for short circuit

The control unit will report which short circuit isolators have been activated. The short circuit failure is located between the activated short circuit isolators.

$ $; . $ 3 * <

! "

When loop units are connected, it is not allowed to use an insulation tester with a voltage exceeding 30 V.

Measure between the + and - pole and earth to detect an earth fault. Connect the ohm meter between the + pole and earth as shown in the following figure. Measure and repeat the procedure for the - pole.

The measured value should be more than 50 kOhm for a cable with a maximum length of 3 km. Values below 8 kOhm (±2 kOhm) will be indicated as earth fault.

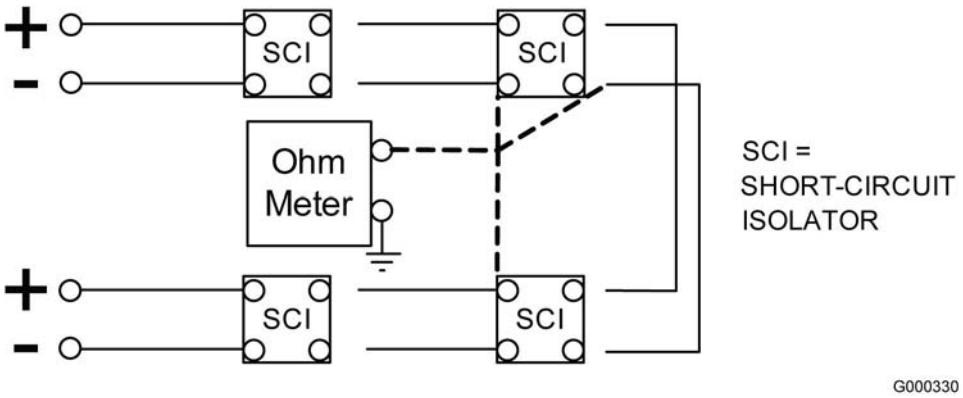

Figure 7. Test for earth failure

The control unit reports the detector loop or central where the earth failure occurs.

Proceed as follows when you want to locate an earth fault.

1	Divide the cable in two and locate the earth fault.
2	Divide each half in two and locate the earth fault.
3	Continue to divide the cable into halves until you have found the exact position of the earth fault.

3.3.7 Setting the Address on Loop Units

In order to become operational, all addressable loop units such as detectors, manual call points, etc. that are connected to the Loop M loop module must be given an address between 1-254. Loop units located on a single physical loop must be given unique addresses.

Loop units without address switches

For addressable units without a DIP switch, the address is set with a special address programming tool. For further instructions, see Instructions for Address Programming Tool, page 17.

Loop units with address switches

On units with a DIP switch, the address is set using the 8 pole DIP switch located on each addressable unit as shown in the following figure. The DIP switch values follow the binary system.

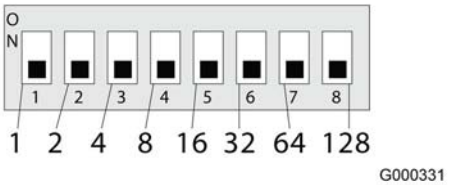

- . / -

Refer to the Installation Manual Appendix for an address list.

The value of the address is set according to the switches set to ON position as shown in the following figure:

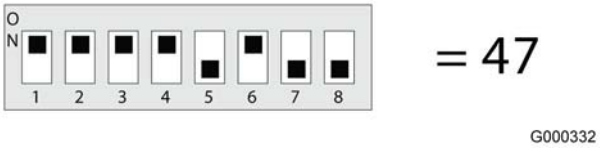

0 . /

By setting the switches numbered 1,2,3,4 and 6 to the ON position, the address is configured as 1+2+4+8+32 = 47.

NOTE!
After setting the address, remove the label attached to the detector and use it to seal the address switch.

Address units

In addition to the loop address, address units and I/O units are equipped with an ID DIP switch. This ID DIP switch determines the unit's functionality.

Refer to the Installation Manual Appendix for an ID list.

Addressable indication units

The address of addressable indication units is set identical to the loop address of the detector it shall indicate.

Addressable timers

The addressable timers are located on the detector loop in the same way as any loop unit.

For UR-2/UR-2K type timers, three DIP switches are set as follows:

- The loop address for the timer.
- Not used.
- Not used.

The disablement interval is defined in the Configuration program.

NOTE!
Timers do not affect the function of the manual call points or heat detectors.

Short circuit isolators

The separate short circuit isolators are given a unique loop address in the same way as the other loop units.

3.3.8 Instructions for Address Programming Tool

To set address on loop units without address switch, please use suitable address programming tool. One example is the Evolution Address Programmer (EV-AD2) Part no. 5200123.

G002910

1 # & / 2 # 3 ' 4

1	For detailed information, refer to the data sheet for corresponding unit.

3.3.9 Setting the Address on Repeater M 4.3

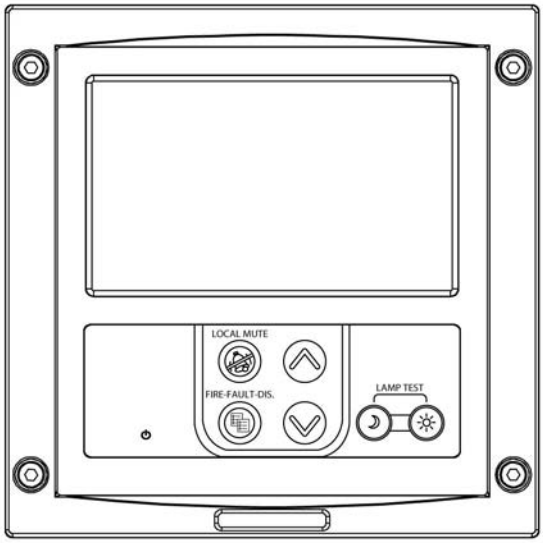

G002133

Follow this instruction to set address for the Repeater M 4.3 module in the system and set the panel functions.

1	Press both arrow keys + to open the Enter Access Code menu. Approximate 4-5 seconds.	Use the arrow keys to scroll and select the digits for the Access Code. Confirm with the Local Mute button (= Next digit or Enter). (= Previous.)
2	Proceed to choose address and layout for the Repeater module: • Enter Central Address • Enter Module Address • Enter Layout Reboot the Repeater module (it will take the module about 20 seconds to restart).	For all menu alternatives use the arrow keys to scroll and select. Confirm with the Local Mute button. Follow the instructions on the lower part of the screen.

3.3.10 Electrical Installation, Central Equipment

Terminal layout

Since most systems are designed specifically for each customer, no standard for connecting the different modules within the system exists.

Refer to Central Unit Terminal & Cabling Layout, page 59 for more information.

For other electrical installations, such as Printer and Basic Backup Signal (BBU), refer to the specific project drawings.

Control Panel

If the Control Panel is placed outside of the Fire detection cabinet, connection to the Central Unit is made via the external Backbone Bus channel (BBE), as shown in the System Block Diagram, page 5. Each cable should be routed seperately for maximum security.

4 Verification

4.1 Prerequisites for Verification

NOTE!
The configuration of the loops must be performed by a person with good knowledge of the system. This operator must have the authority to work in access level 4.

The system is delivered with a complete system configuration or a test configuration.

Hint!
To verify cable status and loop unit addresses, it is possible to confirm the addressable detector loops with a SE3000 test device before making connections to the central unit.

4.2 Loops

4.2.1 Verification of Loops

NOTE!
Once the loop cable has been tested and is free from faults, the next step is to connect it to the central.

The verification procedure is described below:

1	Make sure that the system is connected to an external power supply.	Refer to Installation, page 7 for information on the electrical connections.
2	Connect both the A- and B-side of one of the loops to the Loop M X loop module.	
3	Power up the system. The Power LED lights and a text appears on the display to show that the system is up and running. Wait for a few minutes to let the system perform all system checks. If the system detects a fault during the start-up, a fault code is displayed in the control panel.	For more information about the fault codes, see Fault Code List, page 64.
4	Measure the voltage on the A-side in the central unit. If all loop units are connected correctly (no polarity fault), the voltage range loop should be 30-37 VDC.	If this is not the case, refer to Polarity Fault, page 25.

5	Verify that the correct number and type of loop units are installed in the correct place. The system will provide you with the requested information if you use the *Menu » 6 Service Menu » 5 Loops*, choose the relevant loop, and then press “2=Loop Units”. Each loop unit will report on which side A (primary) or B (secondary) it answers: OK (A/B) = Answer on both sides. OK (A/-) = Answer only on A side. OK (-/B) = Answer only on B side. OK (?/?) = The loop unit answers but the loop module doesn’t know on which side until an update is made. Press “1. Update list” to perform an update. No answer (-/-) = The loop unit does not answer on either side.	If the list reports (?/?) the answering side status will be updated if pressing “1. Update list”. The system will scan the loop to determine answering side. The loop is disabled during the scan and the procedure may take several minutes (access code 3 is required). If a loop unit is missing, see Wrong Number of Loop Units (only for Addressable Loops on Loop M X), page 25.
6	One loop is now verified and tested. Continue with the next loop.	Repeat steps 3-5 for all other loops.
7	Make a fire detector test of the complete Fire detection system. Use appropriate test equipment (smoke detector test gas, heat detector tester) to test each detector and loop unit. See section Recommended Test Equipment, page 24. Print out the “Fire alarm history list” found under *Menu » 7 History » 1 Fire History List*. This list contains the 500 latest fire alarms, and is cleared each time the system is restarted.	See Testing of System Parts, page 22.
8	Use a top to bottom procedure if you have any problem with the verification of the loop function. Start by solving the problems that affect the whole loop and then continue with the problems with each address.	

.) * +

. + , *)

After installation of the Fire detection system, test the different parts of the system to assure that they function properly.

.)

For additional information about testing, please refer to the Service and Maintenance Manual.

4.2.2.3 Test Mode Overview

NOTE!
This section is only applicable for addressable units.

The system has a special test mode function which makes the testing easier.

When a zone is in test mode:

- External alarm devices and controls are by default not activated in case of a fire.
  Hint!
  This functionality can be turned off.
- The alarm level is lowered to give a quick response to detector test equipment.
- LED indicators on loop units begin to blink.
- Each tested loop unit will indicate activation by its LED indicator.
- If a printer is connected to the system, alarms will automatically be printed as a result of the tested units.
- The units in alarm are automatically reset if the heat or smoke concentration is under the alarm level, or if the manual call point is reset.

NOTE!
The system handles fire alarms from zones not in test mode in the usual way.
The tested zone will automatically return to normal operation after two hours.

4.2.2.4 Testing a Fire-detecting Zone

Consilium recommends that the fire detection system is tested at least once a year to assure correct function.

CAUTION!
During system start-up Loop modules performs a 15 minutes calibration period for pollution level of smoke. No tests should be done during this period.

1	Put the zone into test mode under:) * " * 6) .	* +
2	Select a zone and confirm by pressing the OK button.	The Disablements, Test, and Zone/Unit indicators light to confirm that they are in test mode.

It is now safe to test each detector and manual call point in this fire zone during the next two hours.

All alarms are listed under:) * , 5 * 5 . !

NOTE!
Use appropriate test equipment.
See section Recommended Test Equipment, page 24.

4.2.2.5 Simulate a fire alarm in the system

The “Set in fire” function can only be activated for addressable loop units.

1	Add a disablement for a selected detector in) * " * 6	
2	Choose the relevant loop in) * + &) * (! and find that particular detector.	
3	Press for details.	
4	Push to activate the “Set In Fire” function.	Despite the existing disablement the system will sound the alarm.

4.2.2.6 Recommended Test Equipment

" ! 7

Product	Description
Testifire	Multi-stimulus Detector Tester
Salwico Solo 330	Smoke Detector Tester
Salwico SOLO 461	Heat Detector Tester
Salwico VD T-1	Heat Detector tester
Salwico IR Test lamp	Flame Detector Tester
Salwico UV test lamp	UV Flame detector test lamp
W8066	UV test lamp

For detailed information, please refer to the data sheets for the products.

4.2.2.7 Reset Test Mode

NOTE!
After testing is completed, return the tested zone to its normal condition.
Before exiting test mode, make sure there are no detectors or manual call points in alarm condition.
The tested zone automatically returns to normal operation after two hours.

To reset test mode:

1	The zones in test mode are listed in the Disablement List, found under:) * " * ! .
2	Choose the zone in the disablement list and then press .

4.2.2.8 Test the Control Panel Display

With the function Test display it is possible to test:

- The display
- All indications on the control panel

1	To test the control panel display, use:) * (* $.

4.3 Trouble Shooting

4.3.1 Polarity Fault

One or more loop units are not correctly installed if the measured voltage is much less then 30 VDC. Proceed as follows to locate the loop units with polarity fault:

1	Divide the cable in two half lengths.	
2	Locate the polarity fault on one of the halves.	
3	Divide this half of the cable again into two halves. Continue to divide the cable into halves until you have found the polarity fault.	All the section units are correctly installed when the measured voltage is around 30 VDC.
4	Restart the loop.	
5	Continue with the verification.	

4.3.2 Wrong Number of Loop Units (only for Addressable Loops on Loop M X)

If a limited number of loop units do not answer, the problem may depend on one of the causes listed below.

$!

Cause	Remedy
Less loop units found than configured.	Install the missing loop units or change the configuration.*
More loop units found than configured.	Compare the found loop units with the configuration program.*
Wrong address for the loop unit.	Set the correct address.
Two or more loop units with the same address.	See the Address error paragraph below.
Loop unit is defect.	Replace the loop unit.

Hint!
* The system is equipped with a Hot Plug&Play function enabling the user to add or delete detectors during normal operation without needing to change the configuration file with a PC and restarting the system.

The configuration file may be updated during normal operation from Service Menu (*Menu » 6 Service Menu » 5 Loops*) or directly from the Fault List (*Menu » 1 Fault Alarms » 1 Fault List*). For additional information, please refer to the Service and Maintenance Manual.

Use *Menu » 6 Service Menu » 5 Loops*, choose the relevant loop, and then press “2=Loops Units” to list all found units on the loop. Compare the found loop units with the ones configured.

There is a possibility that two or more loop units with the same address will answer. Possible reports include “double address”, “no answer”, “bad communication” or “abnormal condition”.

. $ $! ' (

A cable break fault cannot be reset in case a fire alarm is present on the loop.

- - % "

Proceed as follows to locate the cable break on addressable loops:

1	List the loop units for the current loop under: *Menu » 6 Service Menu » 5 Loops*	
2	Press “ ” to list all loop units located on this loop. Each loop unit will report on which side A (primary) or B (secondary) it answers: OK (A/B) = Answer on both sides. OK (A/-) = Answer only on A side. OK (-/B) = Answer only on B side. OK (?/?) = The loop unit answers but the loop module doesn’t know on which side until an update is made. Press “1. Update list” to perform an update. No answer (-/-) = The loop unit does not answer on either side.	If the list reports (?/?) the answering side status will be updated if pressing “1. Update list”. The system will scan the loop to determine answering side. The loop is disabled during the scan and the procedure may take several minutes (access code 3 is required).

- % " =)

1	No answer is received on a single fed loop?	The cable is broken before the first loop unit.
2	The loop is a double fed loop?	The cable is broken before the first loop unit and after the last loop unit.

Refer to Test 1: Test for Cable Break, page 13, to measure the resistance with a ohm-meter.

Loop Units are Answering

1	The cable break is located between the “last” unit on the A side and the “first” unit on the B side.

Refer to Test 1: Test for Cable Break, page 13, to measure the resistance with a ohm-meter.

4.3.4 Earth Fault

The control panel displays which loop or central has the earth fault.

1	Examine the faulty loop to locate the earth fault.	Refer to Test 3: Test for Earth Failure, page 15 for more details.

If the earth fault still remains after this step, examine the cables to all other devices connected to the Fire detection system.

4.3.5 Short Circuit

No Loop Units Answer

1	Search for the short circuits between the central unit and the first short circuit isolator.	Refer to Test 2: Test for Short Circuits, page 14 for more details.

If only some Loop Units Answer

1	The control unit displays which short circuit isolators have been activated. Search for the short circuit between the fault reported short circuit isolators to find the exact location of the fault.	Refer to Test 2: Test for Short Circuits, page 14 for more details.

4.3.6 Muting Faults

1	Simultaneously mute all the faults by pressing the button.	
2	The fault indication light stops flashing and glows yellow.	The fault is put in a fault list under) * * !.

4.3.7 Reset Faults

NOTE!
The cause of the problem must disappear before a fault can be reset.

The faults are reset from the Fault list under) * * . !

The Fault is Reset

1	The fault is reset and it disappears from the fault list.

The Fault is not Reset

1	The fault is not reset and the reason for this is displayed.	
2	Check the problem and deal with it.	See Fault Code List, page 64 for more information.
3	Attempt to reset the fault.	

4.3.8 Installation Mode

Loop units affected by Installation Mode will stop reporting faults of type ‘present not configured’, ‘configured not present’ and ‘no answer’.

1	For zones use) * + &) " 8 . For loops use) * + &) * ! .	Installation Mode can be activated for loops and zones containing addressable loop units.
2	Press to activate the function Installation Mode.	

4.3.9 Upgrade Firmware

4.3.9.1 Upgrade Firmware in a Complete CCP System

This instruction describes how to upgrade firmware in a CCP System to Service Pack 1.3.0 and later.

Hint!
Recommendations for centrals containing many control modules/repeaters and/or distributed centrals can be found in section Upgrading Large Systems, page 32.

Follow all steps below:

A. Prepare the USB memory stick
B. Upgrade the firmware in a Control M 4.3, Repeater M 4.3 or Control M 2.2
C. Upgrade the firmware in the Control M X
D. Upgrade the firmware in the remaining CCP modules

Prerequisites

- USB memory stick
- CCP software release
- Laptop running Windows XP/2000/Vista/7 and an Ethernet Cable (necessary for Control M X)

A. Prepare the USB memory stick

1	Copy the file ! to the root catalogue of the USB memory stick.	

B. Upgrade the firmware in a Control M 4.3, Repeater M 4.3 or Control M 2.2

1	Insert the USB memory stick into the control module.	
2	Reboot the control module.	
3	The control module will now boot from the USB uImage and write a new Linux installation to the built-in FLASH Memory.	The text CCP is shown for a few minutes until the uImage has booted.
4	Firmware update of the application starts.	An animation of a rotating disc is shown during this phase that is finished when the word 'Success' is displayed.
5	Reboot the control module with the reset button or by removing power.	

C. Upgrade the firmware in the Control M X

1	Use the CCP Firmware Update Tool to update this module via the Ethernet connector.	See section Upgrade Firmware in a Control Module via Ethernet (Control M X), page 30 for details.

D. Upgrade the firmware in the remaining CCP modules

1	Select) * &) * in the Control M 4.3.	" *# $ % Access Level 4 is required to upgrade firmware in the system. You may be required to login with correct credentials during the firmware upgrade process.
2	Wait for the system to compare firmware versions in the Service Pack with the firmware versions in the Modules found by the system.	A list of centrals is displayed.
3	Select the central you want to upgrade with firmware and press to get a list of Modules found in that central.	
4	Select the module you want to upgrade and press &to start the upgrade.	
5	Wait until the firmware download counter has progressed to 100%.	

6	Repeat steps 4 and 5 for all the Modules you want to upgrade. It is recommended to upgrade Modules marked with ⊗ and ⚠.	**Explanation of icons:** • ⊗ = Invalid firmware • ⚠ = Upgrade available • ✓ = Firmware OK • ? = Service Pack or Module missing – firmware download not available

. $? " %) < = ! &
0 ! 5 1

This instruction describes how to upgrade the firmware in a CCP Control Module via Ethernet using the CCP Firmware Update Tool.

Primarily, use a USB memory stick to upgrade firmware in in a Control M 4.3, Repeater M 4.3 or Control M 2.2.
To Control M X you have to use the Ethernet connection.

Follow all steps below:

A. Prepare the physical connection
B. Start the Firmware updater tool
C. Select network adapter
D. Establish connection with target
E. Update the firmware

+ ,

- Laptop running Windows XP/2000/Vista/7 and an Ethernet Cable.
- CCP software release image file (i.e. uImage).
- The Control Module must have at least **Firmware 1.2.0** in order to support update via Ethernet.

+ % %

1	Connect the Ethernet cable between your computer and the module you wish to update.	! " You have to connect the cable point to point directly to the module. If you connect to a network, the tool may serve all the centrals and other clients with unexpected results.

B. Start the Firmware updater tool

1	Execute the firmware update tool “firmware_updater.exe” as administrator. • In Windows XP/2000. Shift+right click firmware_updater.exe. Then select) * and enter your admin login/password. • In Windows Vista. Start firmware_updater.exe and you will be prompted to login as administrator automatically.	**CAUTION!** You have to run the tool as administrator, else the tool won't be able to establish proper communication with the target.
2	When the file dialog opens, select the image you wish to download and select .	

C. Select network adapter

1	Go to * 9 .
2	Select manual configuration.
3	In the drop down list. Select the network adapter that you connect your cable to.
4	Select to confirm your selection.

D. Establish connection with target

1	The tool should now automatically attempt to establish connection with the target and print out detected Central and Card address together with current flashed firmware version.
2	The tool should now be ready to download new firmware.

E. Update the firmware

1	Press the + , ' ! button and wait.	This may take some time to complete.
2	Target will reboot.	If the target hardware has a version before 1.2.0 you may still be able to program it by manually rebooting the target when requested by the tool. (If the bootloader supports booting over Ethernet.)
3	Target will then re-establish connection with the tool and start downloading the new firmware.	
4	Target will be reflashed.	
5	Target will reboot and start the new firmware.	

4.3.9.3 Troubleshooting for Firmware Update Tool

If the tool stops while attempting to start servers

- Check that you are running the tool with administrator rights
- Check that you have selected the correct Ethernet interface in * 9
- Check so the target module is running (i.e. turned on)

If the tool stops while scanning for target hardware

- Check the physical cable connection
- Check so the target has U-boot 1.3.4 and firmware release at least 1.1.1
- Check so the target is running (i.e. turned on)

If the tool stops while establishing TFTP connection

- Try to re-run the program procedure from start, or
- Try to switch to another Ethernet adapter.

If the tool stops while requesting target reboot

- A target reboot may take some time, please be patient and wait awhile before proceeding.
  The tool should continue when a response is received from the target.
- The target hardware may be running a firmware before 1.1.1 and therefore can not respond.
  In this case you can try and reboot the target manually.

4.3.10 Upgrading Large Systems

4.3.10.1 Upgrade strategy

NOTE!
The following procedure is recommended for centrals containing many control modules/repeaters and/or distributed centrals.

Hint!
Before following the instructions below it might be a good idea to understand the basics of what the instructions are trying to achieve and that is to avoid excessive master/slave switches and to minimize the traffic that occurs when the system is trying to synchronize its state between all control modules.

To accomplish less traffic due to the configuration synchronization upgrade the firmware and configuration at the same time for each control module using the USB stick (repeaters must still be synchronized at the last step).

In order to reduce the number of master/slave switches the ordering of the upgrade is to start with the control modules on the primary system bus and then proceed with the control modules on the secondary system bus.

To further reduce traffic on extension buses. Upgrade and restart the control modules owning an extension bus before the repeaters on the extension bus.

Finally, for really large systems (more than 5000 detectors) it will further reduce the traffic to disconnect the system buses completely at 1.1 and 1.2 during the upgrade.

4.3.10.2 How to upgrade each control module

Preparation

Prepare a USB memory stick with the desired controlm_firmware file configuration file.

Upgrade for control panel modules (Control M4.3 and Control M2.2)

1	Insert the USB memory stick into the control module.	
2	Reboot the control module.	Update starts. Wait until the firmware update is finished.
3	Remove the USB memory stick.	
4	Restart the control module.	Wait until the control module has restarted.
5	Insert the USB memory stick.	
6	Copy the configuration file to the control module via the menu system.	Choose) * + & * + * ! : ;) .
7	Remove the USB memory stick.	
8	Restart the control module again.	

Upgrade for Control M X modules

1	Two alternatives for Control M X modules: • move the CPU module to a Control M4.3 or Control M2.2 and upgrade it as described above, or • connect a Ethernet cable to the Control M X and use the firmware_updater software (CCP Firmware Update Tool).	For instructions to use CCP Firmware Update Tool, please refer to Upgrade Firmware in a Control Module via Ethernet (Control M X), page 30
2	When the module is upgraded and restarted use WinSCP (or similar) to copy the configuration file to /app/rw.	
3	Restart the module again.	

4.3.10.3 Upgrade modules in the following order

NOTE!
Make sure to read How to upgrade each control module above before attempting to follow these instructions!

1	Disconnect power to all control modules/repeaters in the system. For really large systems (more than 5000 detectors) also disconnect the system buses at 1.1 and 1.2.	
2	Reconnect power and upgrade the modules connected to the primary system bus.	This means 1.1, 2.1, 3.1, ..., x.1. The ordering is not important.
3	Reconnect power and upgrade the modules connected to the secondary system bus.	This means 1.2, 2.2, 3.2, ..., x.2. The ordering is not important.
4	Now reconnect power and upgrade all other control modules/repeaters within each central. If a control module has an extension bus with repeaters on it then make sure that the control module itself is first upgraded before upgrading its extension bus modules.	Since it is not possible to copy the configuration file directly to repeater modules it will be synchronized later on.
5	All control modules/repeaters should now be upgraded.	If the system buses were disconnected at the first step then reconnect them - starting at the primary side - and wait a couple of minutes for the system to synchronize.
6	If repeater modules are present on backbone or extension bus then go to 1.1 and synchronize the configuration via the menu system, else the upgrade of repeater modules are complete.	
7	Upgrade all other system modules within each central.	For instructions, see section D. Upgrade the firmware in the remaining CCP modules, page 29.

4.3.11 Save the system log to a USB memory stick

If you want to control the information saved in the system log you can download it from the Fire detection system.

The system log file can be downloaded using an approved USB memory stick (available from an authorized dealer).

CAUTION!
Do not remove the USB memory stick until the download is finished.

1	Connect the USB memory stick to the USB port on the Control M 4.3 panel.
2	Choose) * + &) * - . !

3	Press **OK** to save the systems log to the USB memory stick.
4	The system will now download the system log file. Wait until this process is complete!
5	Disconnect the USB memory stick and copy the system log file to a PC. File name example: YYYY-MM-DD_xxxxxx_syslog.txt

. $ # = % *

In case it is not possible to troubleshoot and solve a specific problem, please follow these guidelines when contacting an authorized service office.

- Describe the fault symptom, be specific
- Describe how the fault situation can be generated
- Attach a system log file (instructions for download from the Fire detection system can be found in section Save the system log to a USB memory stick, page 34)
- Attach the configuration file (instructions for download from the Fire detection system can be found in the Service & Maintenance manual or in the Configuration manual)
- Attach the backbone log if applicable
- Add your contact information

5 Commissioning Requirements

5.1 Prerequisite

The procedure described below in Loop Requirements is to be followed by the installation team.

If nothing else is agreed, no commissioning engineer will be sent before the steps below are confirmed and the appropriate papers are signed and sent to your local Consilium office or authorized representative.

5.2 Loop Requirements

The following specification is a checklist of requirements for the system loops. The specification shall be used by the installation organisation of loop units and cabling. Start with Part A: Loop Configuration, continue with Part B: Loop Status and then Part C: Central Status. Part B: Loop Status must be used once for each loop.

The list in Part A: Loop Configuration includes all data you need when configuring the loops. Part B: Loop Status is more like a checklist - follow it point by point. When you have completed this part you should have filled in, signed and faxed the special document Address List and Test Report, page 52, one for each loop in the system. Part C: Central Status is also a checklist, but it deals with the status of the central unit.

5.3 Part A: Loop Configuration

Refer to Cable Requirements, page 8 and Loop Lengths, page 8 for cable requirements and loop limitations.

5.4 Part B: Loop Status

1	All units shall be located at the proper place according to the drawings.
2	Fit detector heads, manual call points, address units, and control modules into their bases.
3	Each loop unit shall be given a unique address. For analogue addressable units, refer to Address List and Test Report, page 52.
4	Connect cables to loop unit terminals according to the data sheet for that loop unit.
5	Remove all plastic covers, protective tape, or other devices preventing detectors/loop units from being functionally tested. **CAUTION!** Do not remove dust covers from smoke detectors until all polluting (e.g., dusty) construction work is finished and the area has been cleaned.

6	When testing loop units, follow the testing instructions provided with the testing device. **NOTE!** Use appropriate test equipment. See section Recommended Test Equipment, page 24.
7	Check the addresses of all loop units , according to Address List and Test Report.
8	A test report must be filled in for each loop as described in Address List and Test Report. - , and tick off on each checked address.
9	After each loop is completely tested, the person in charge of the loop installation , the test report as described in Address List and Test Report.
10	Send one copy of the signed test protocol to your local Consilium office or authorized representative.
11	When all loops are tested and protocols are signed, your local Consilium office or authorized representative may be requested to come and make the final control and adjustment of the system.

5.5 Part C: Central Status

CAUTION!
The presence of an authorised engineer is required before power is connected to the central unit to minimise the start-up costs for the yard and/or owner during commissioning.

- All control and indication functions must be connected to relay outputs. Connect all outputs and inputs according to the terminal drawings.
- Connect finalized loops to the central according to the terminal drawings.

NOTE!
Deviations from the above criteria may cause time delays. These time delays will be invoiced.

5.6 Summary

For each loop, a test report as described in Address List and Test Report, page 52 must be filled in and sent to your local Consilium office or authorized representative before commissioning of the system starts.

6 Fire Detection Installation Guidelines

CAUTION!
Always refer to and act according to current local rules and regulations.

6.1 Loop Units Installation Guidelines

6.1.1 General Comments when Installing Fire Detectors

This chapter provides important information for installing protective fire detection equipment.

- Prior to installation, program all addressable loop units with a loop address. Refer to the Address List, page 52.
- After the loop address is set, place the adhesive label over the address's DIP switch to seal it. (Only applicable for detectors equipped with DIP switch.)
- For conventional (non-addressable) detectors, an end of line resistor must be installed in the last detector/unit base of each section. The type of resistor depends mainly on how the fire detection system is configured.
- Make sure that smoke detectors maintain their protective dust covers until polluting activities such as construction have been completed and the area have been cleaned.
- Mark each loop unit with zone and address number. Suitable marking location for a detector is on its base. Special adhesive labels for marking are available from the authorized organization.
- Each unit requires an IP class suitable for its operational environment.
- To help maintain the correct IP class, plug any unused cable glands.
- Keep the detectors protection caps on as long as possible. The protection caps should be removed after commissioning is completed and the system is handed over.

NOTE!
For detailed connection and installation information, refer to the data sheet for each unit.

6.1.2 Smoke Detectors

- If possible, install smoke detectors in the center of a supervised area or where smoke most likely arises.
- A smoke detector covers a maximum area of 74 m^2.
- To avoid unnecessary alarms, keep smoke detectors away from showers, saunas, ovens, and toasters.
- Do not install a smoke detector behind an air duct or near ventilation inlets, which could delay smoke from reaching the detector. The minimum distance for placement of a smoke detector from a ventilation inlet is 0.5 m.

- Do not install a smoke detector in areas with temperature below 5°C or where condensation is likely.
- A smoke detector shall not be installed where it may be exposed to direct air flow > 20 m/s.
- A smoke detector's minimum distance from a wall or a bulkhead is 0.5 m.

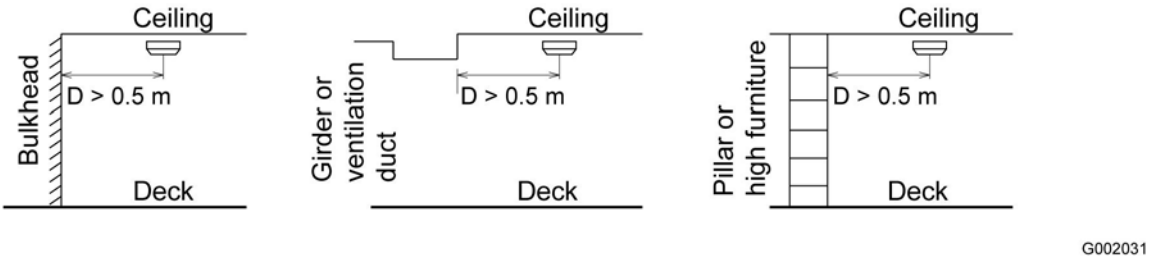

Figure 11. Smoke detector locations.

- The maximum distance for a smoke detector from a wall or a bulkhead is 5.5 m. The maximum distance between two detectors is 11 m.
- When placed in engine spaces, smoke detectors shall have 2 m extra cable slack to enable relocation within the space.
- In cabins and in lockers, mount the detector with its LEDs facing toward the door.

; $

- Install a heat detector in an area's center and where it can work reliably and provide the best protection.
- A heat detector covers a maximum area of 37 m^2.
- The alarm temperature of the detector shall be set least 30ºC above normal temperature.
- Avoid placing the detector near heat-generating devices, such as ovens or saunas, which could cause unwanted alarms.
- A heat detector's minimum distance from a bulkhead is 0.5 m.
- A heat detector is installed a maximum distance of 4.5 m from a wall or a bulkhead. The maximum distance between two heat detectors is 9 m.
- In cabins and in lockers, mount the detector with its LEDs facing toward the door.

; . <

- Install flame detectors where flames, in the initial stage of a fire, might arise.
- Mount the detector giving it wide access to the whole area where the flames are expected. When placing the detector, try to "see" the area as the detector might.
- Mount the detector in such a way that vibrations are avoided as much as possible.

- Avoid shadow areas from objects in the room, by placing a second detector facing the opposite side of the object, see Figure 12. Flame detector mounting.
- Mount the flame detector to give it clear access to the location of the anticipated fire. A detector has a typical cone of vision of 100° from the central axis, see data sheet of flame detector for more information. Place the detector beside, but not directly above, the protected object to prevent the risk that black smoke may block the flames. Place the detector at an angle of 45° downwards. This way the detector will project both downward and forward and catch the least amount of dirt. For more information about its angle of projection, refer to the flame detector's data sheet.

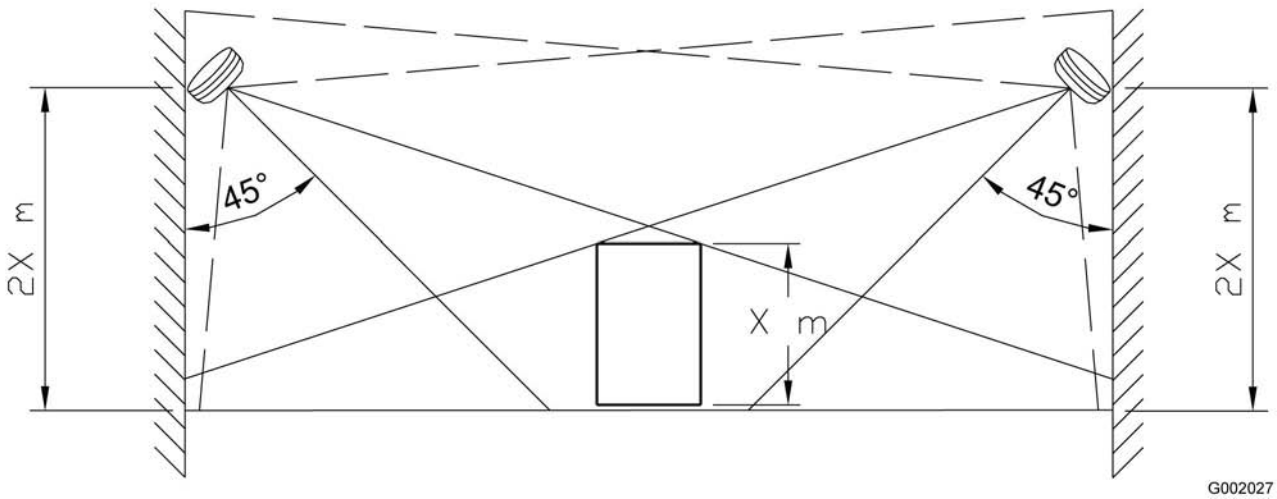

Figure 12. Flame detector mounting

- A general rule is to install the detector on a height that is twice the height of the highest object in the supervised area, if possible.
- Avoid sources for false alarm (e.g. flares) from entering the detector's cone of vision.

; 6 (* 5

- Select the detector's location as described under section Smoke Detectors, page 39.
- Detectors are connected to the fire detection loop through an isolator unit, which should be located in a safe area directly outside of the protected EX area. The smoke detector should be made easily accessible for service.

; ; ! & #) %

- Saunas generally have ceiling-installed detectors.
- Install a heat detector in an area's center and where it can work reliably and provide the best protection.
- A heat detector's minimum distance from a bulkhead is 0.5 m.
- The alarm temperature of the detector should be set at least 30ºC above normal attainable temperature.

- Connect the detector to an address unit located outside the hot area and in as good of environment as possible, and where it can easily be accessed for service. The maximum cable length between the detector and the address unit is 25 m.
- The address should be set on the address unit and the function ID switch (small DIP switch) should be set.
- An end-of-line resistor shall be fitted inside the detector base if the detector is the last unit on the line.

6.1.7 Cold Room Heat Detectors

- Install a heat detector in an area's center and where it can work reliably and provide the best protection.
- A heat detector's minimum distance from a bulkhead is 0.5 m.
- Connect the detector to an address unit located outside the cold area and in as good of environment as possible, and where it can easily be accessed for service. The maximum cable length between the detector and the address unit is 25 m.
- The address should be set on the address unit and the function ID switch (small DIP switch) should be set.
- An end-of-line resistor shall be fitted inside the detector base if the detector is the last unit on the line.

6.1.8 Address Units

- The address unit is used to interface conventional detectors (or any dry closing contact) to the addressable fire detection loop.
- In addition to the loop address, the address unit has one ID switch that has to be set. For more information, refer to ID List, page 55.

6.1.9 Manual Call Points

- A manual call point shall be installed at each exit at a height of 1600 mm from deck to the centre of the call point. No part of a corridor shall be more than 20 m away from a call point. Positions where risk for impact or physical damage is likely to occur shall be avoided.
- In special category spaces call points shall be spaced so that no part of the space is more than 20 m away from a call point, and one shall be placed close to each exit from such spaces.
- A test key is supplied with each call point. Save these keys for future tests.

6.1.10 Short Circuit Isolator

- Short circuit isolators (SCIs) can be installed between each fire detection zone, where the loop cable leaves or enters the zone. SCIs can also be installed between decks. The location principle is to separate each fire detection zone with an SCI. It is important to have the SCI close to where the cable changes to a new fire detection zone.

- Installation shall preferably be hidden from the public but easily accessible for service.
- The short circuit isolators must be connected with correct polarity.

6.1.11 Timers

- The timer unit is used for the temporary disablement of detectors in areas where smoke or heat can occur under normal circumstances.
- The timer should be mounted for easy access and operation and well marked with its function.
- For UR-2 type timers:
  In addition to the loop address, the address interval for the detectors to be disabled must be set on the timer's extra DIP switches.

6.1.12 Bells

- Installation height is normally 0.2 m from the ceiling and max 2.2 m from the floor.
- After installation, make sure that the gong is free from the cables, otherwise the sound output may be reduced.
- Should be mounted with cable entrance facing downwards.

6.1.13 Electrical Siren

- Make sure to programme the siren to the correct sound and intermittence using the DIP switch inside the siren. More information about how to set the DIP switch is found in the siren's data sheet.
- Turn the volume control to max.
- Clearly label the siren with the alarm's category (e.g., FIRE ALARM).

6.1.14 Door Holder Magnet 65kp (650N)

- Normally used for door leaves less than 1050 mm wide.

6.1.15 Door Holder Magnet 130kp (1300N)

- Normally used for door leaves more than 1050 mm wide.

6.1.16 Door Release Switch

- This switch is normally placed on both sides of each fire door. Make sure it is not hidden behind the door leaf when the door is in open position.
- Installation height is normally 1.8 m above deck or floor level.

6.2 Cabling and Electrical Installation

6.2.1 Cable Types

All cables must be approved for marine installations. Refer to section Cable Requirements, page 8.

6.2.2 Cable Protective Tubes of Metal

When installing cable protective tubes – take into account that the cable easily can be pulled through the tube and afterwards easily be changed or removed.

When installing metal cable tubes – following must be taken into account:

- If there is more than one cable in the same tube, the cross section (counted of mutual external diameters) may be max 40% of the inner cross section of the tube.
- If the tube is more than 10 m long, drafting holes has to be done.
- Tubes must be installed on support so that the background may be painted.
- Tube installation must be done by welding or by tube joints. Fastening distances are located 100 mm from the tube end and afterwards every 1.5 m.
- Bending radius must be at least 6 times the external diameter of the tube.
- The upper tube end in open decks must be sealed up, this to prevent water from coming in.

6.2.3 Cable Protective Tubes of Plastic

Plastic tubes will be used inside the wall linings and also in the ceiling, where attachment directly to the supporting construction is not possible.

When installing plastic cable tubes – following must be taken into account:

- Bending radius must be at least six times external diameter of the tube.
- Installation must be done onto the warm side of a thermal insulation and at least 100 mm from a hot surface, preferably below it. Piping is not allowed inside a thermal insulation.
- The tubes are tied with galvanized wire clips. The first clip is located approximately 100 mm from the tube end and afterwards every 1 m.

6.2.4 Cabling

When installing the cables – take into account the minimum internal bending radius, that has nominal value of six times the external diameter of the cable.

- If two separate routes for the cables are required – all supplies and involved control cables must be passed by separate routes according to the drawings and cable passing list.
- Do not bundle low voltage cables together with power cables, they have to be separated from each other.

- When cable bundles are mounted on trays this can be done as follows:
  - On the trays along the ship – the power cables on the left side (Port-side) and the low voltage cables on the right side (Starboard-side) of the tray.
  - On the trays across the ship – the power cables to the fore side and the low voltage cables in the stern side of the tray.
  - On the fore or stem bulkhead trays in vertical shaft – the power cables to the Port-side or the Starboard-side bulkhead trays, the power cables to the fore side and the low voltage cables to the stern side of the tray.
- In cable junctions and when exiting the cable trays bridges with fastening bolts have to be used – low voltage cables for alarm, communication, navigational and measuring equipment have to be installed in their own bundles.
- Each fire detector installed in engine room areas shall have two (2) meters extra cables, this to make it possible to relocate the detector position when performing “real” smoke tests with fans etc. running.

6.2.5 Cable Inlets to Equipment

When installing – the following must be taken into account.

- Wet spaces:
  - Cables are penetrated from the bellow or from the side with diaphragm seals.
  - Let the cables enter the sealing at a right angle (or as near a right angle as possible).
- Dry spaces:
  - Free entering

No cables are to be installed below 50 mm distance from bottom or fuel oil tank, except cables ending in these spaces.

6.2.6 Fixing of Cables

When fixing the cables – the following must be taken into account.

- When cable bundles are mounted on trays the fixing is as follow:
  - Cables above a tray:
    - a few small cables with a normal bundle tie
    - bigger bundles with wide bundle ties
  - Cables under a tray, vertical trays and tray installed in their angle side:
    - plastic bundle ties can be used, however every fourth tie shall be of metal
- Outdoor cables shall be mounted with stainless steel band or bundle-ties of steel.
- Cable fixing is to be done at every ladder rung, max 400 mm.
- Cable fixing in device penetrations/switchboards/desks etc. are to be fixed so that possible mechanical strain do not pass over to penetrations or connection points.

- When installing cables without plastic tube inside the lining, the cables are fastened to supporting construction of the ceiling with plastic bundle-ties.

6.2.7 Markings

- Cables entering terminal boxes and equals shall be marked with identification markings.
- The cable identification is to be done with a metal dymo-tape – on open decks the dymo-tape must be of stainless steel.
- Cable markings are the same as the identification marks in the drawings.

6.2.8 Cable Ends

When terminating the cables – the following must be taken into account:

- The cable is passed in switchboards, decks and terminals unpeeled as near the connection place as possible.
- Mark extra wires (not used) and do not cut them.
- Earthing wire is marked with yellow/green sleeve.
- Cable wire ends of 0.5–2.5 mm^2 shall be equipped with compression-type collar, if the contact screw presses direct wires.
- A cable eye shall be installed at the end of a conductor, connected by means of a screw or a bolt.
- No more than two conductors shall be connected onto one side of the same terminal.

6.2.9 Protective Earthings

- All metal casings of electrical equipment over 24 V are to be earthed to the ships hull. When the earthing is done with cable conductors – yellow/green conductors are to be used or last conductor wire of the cable covered along the whole length with yellow/green hose. Yellow/green is used only for earthings.
- A separate earthing conductor is connected to the earthing point on the external enclosure of the equipment and on the ships hull by means of a screw connection.
- Devices shall not be earthed by means of a separate earthing conductor through another installation (serial earthing).
- The door of a metal casing containing electrical equipment (voltage over 24 V) must be earthed to the casings body with one earthing conductor. The earthing fastening screw shall have a diameter of at least 6 mm with the exception of the screws mounted by the manufacturer. The earthing screw shall not be used for any other purpose than earthing.
- Electrical equipment is to be earthed by S-conductor (yellow/green) of supply cable with a cross section area of 1.5–16 mm^2.

Other equipment earthings - see table below.

Table 5. Protective earthings for other equipment.

Cross section of supply cable (mm^2)	1.5	2.5	4	6	10	16	25	35	50
S-conductur (mm^2) (yellow/green)	6	6	6	6	6	10	16	25	35

; : - * , %

The mounting heights are according to the table below, unless otherwise specified in the drawings.

Table 6. Mounting heights of electrical equipment.

	Centre (mm)	/		Down edge (mm)
		From the deck (mm)	From the ceiling (mm)	
Switches	1500	1100		
Fire door release buttons		1800		
Fire alarms bells		max 2200	200	2200
Fire alarm buttons	1600	1600		
Fire damper buttons	1500	2000		2200

7 Appendix

7.1 General alarm on the CCP panel

The Fire alarm panel type Salwico CCP Cargo will be used as the General alarm system. The general alarm functionality is type approved by Det Norske Veritas.

In addition to meeting the DNV requirements and regulation 6.4.2 of Chapter III in the SOLAS the general alarm functionality meets the requirements of paragraph 7.2.1 of the LSA Code and IMO Resolution A.830(19): Code on Alarms and Indicators, 1995. The CCP fire alarm system also conforms to the requirements in IEC-90945.

In general, the sound level during general alarm should be a least 10 dB(A) above the ambient noise level in all accommodation spaces, service spaces, control stations and engine room spaces. Inside the cabins, the sound level should be at least 75dB(A) at the sleeping position. In no case should alarm level in a space exceed 120dB(A).

To comply with the DNV requirements the alarm devices must either have one fused alarm circuit pr. deck or be connected to a ring loop as shown in Figure 13.

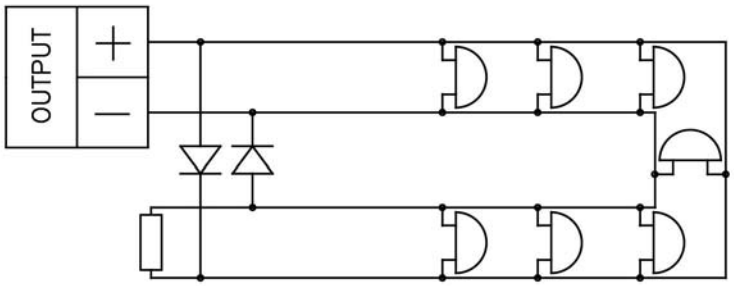

G005057

" <

Figure 14. shows the redundancy in power supply to all units in the system. The system is power supplied both from the main 230 V supply and the emergency 230 V supply. The backup batteries must be calculated to last for at least 30 minutes.

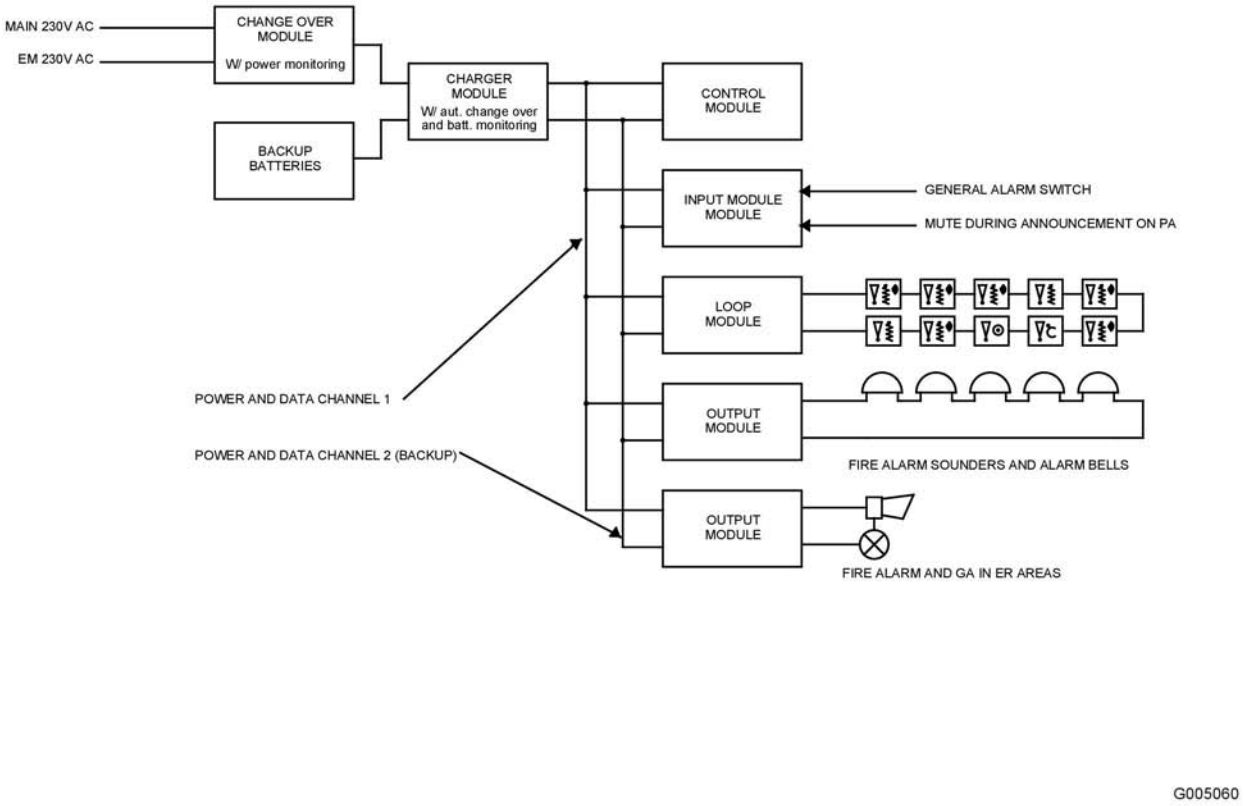

Figure 14. The redundancy in power supply.

Figure 15. shows the functionality of the general alarm system and the priority of alarms.

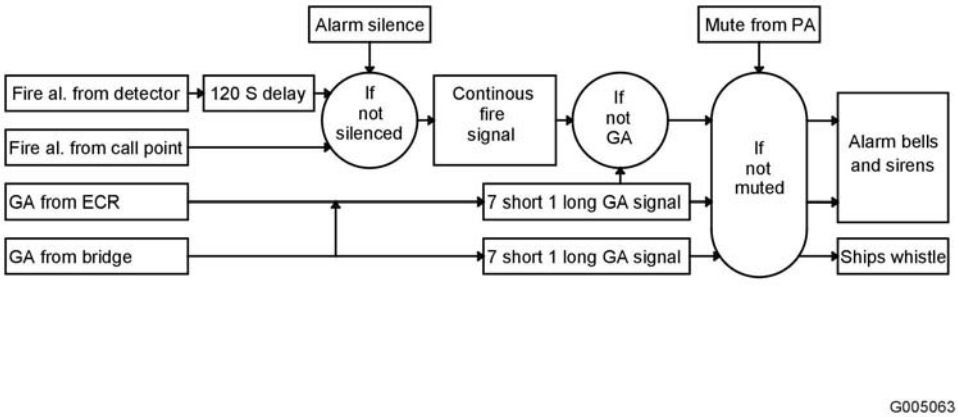

Figure 15. The general alarm system.

9 6 . <

% * = ,

The following optional functions with requirements are available in the Fire detection system:

The paragraphs in the tables below refer to EN54-2:1997/AC:1999, A1:2006.

Table 7. Optional functions.

+) %	< %
7.8	Output to fire alarm devices (Item C)
7.9.1	Output to fire alarm routing equipment (Item E)
7.11.1-2	Delays to outputs (Item C+E) " Max allowed alarm delay time is 10 minutes acc. to EN54-2.
7.12.3	Co-incidence detection (Item C)
8.3	Fault signals from points
8.9	Fault warning routing equipment (Item J)
9.5	Disablement of addressable points
10	Test condition

<) % * 6 .

The system includes an integrated power supply that meets all mandatory functions of EN54-4:1997/AC:1999 and A2:2006.

* , 6 .

- Earth failure
  The Fire detection system has the capability to indicate earth failure individually per fire detection loop and power supply.
- Control panel
  It is possible to mount the control panel separately from the central. See the block diagram in section System Block Diagram, page 5.

7.3 Address List and Test Report

Address List 1(2)

for Salwico Loop Units with 8-pole DIP switch

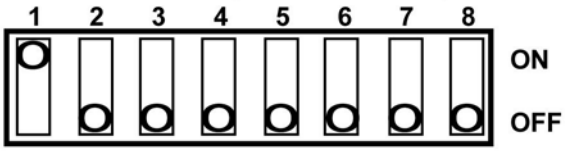

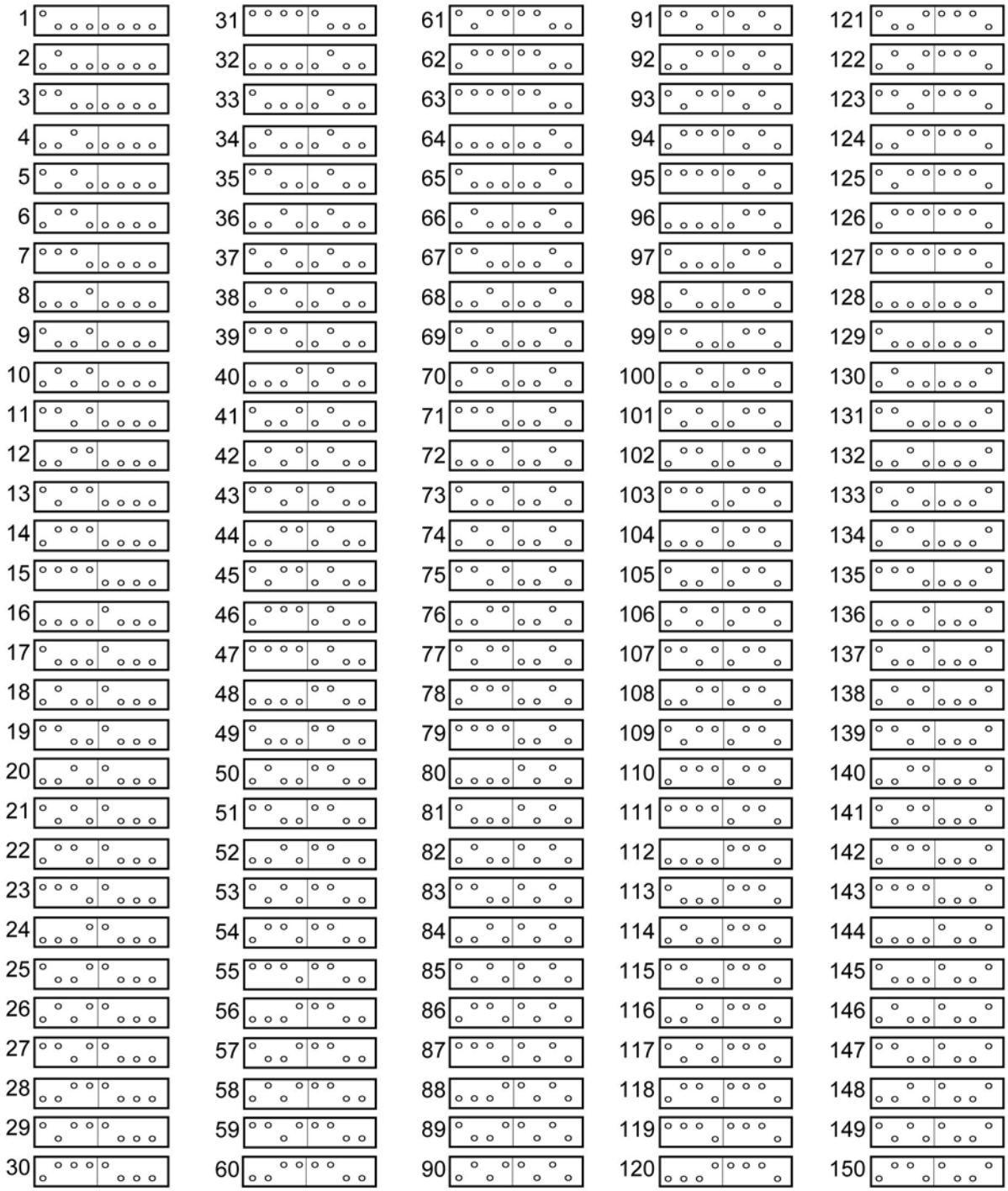

G002902

Address List 2(2)

for Salwico Loop Units with 8-pole DIP switch

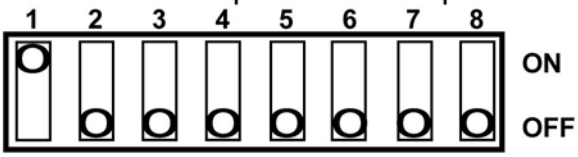

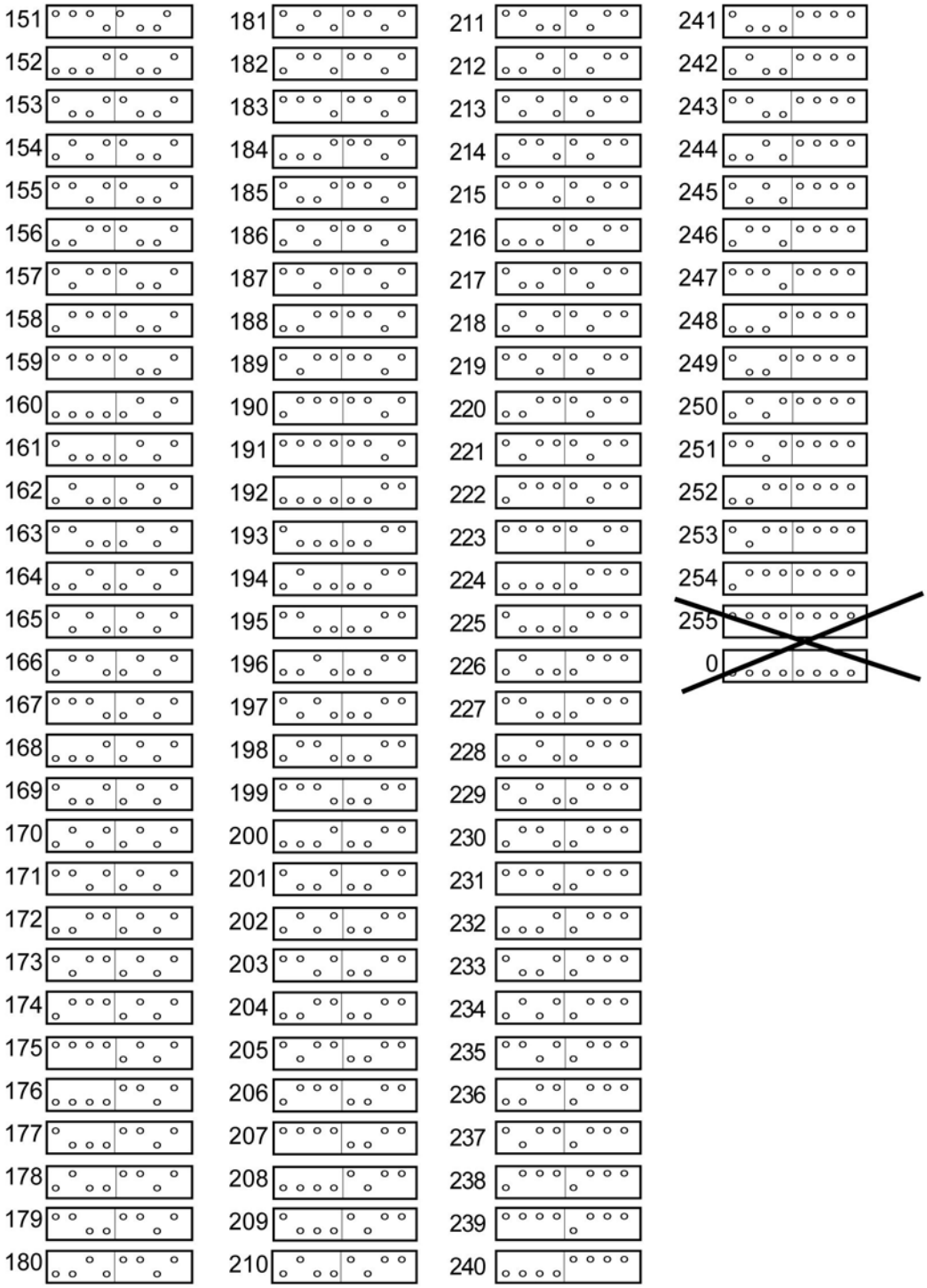

G002903

Test Report

for Salwico Detection System Loop Units

Loop no .....

Example 8 ☑ OK
9 ☐ Not OK

	OK		OK		OK		OK		OK		OK		OK		OK
1	☐	31	☐	61	☐	91	☐	121	☐	151	☐	181	☐	211	☐	241	☐
2	☐	32	☐	62	☐	92	☐	122	☐	152	☐	182	☐	212	☐	242	☐
3	☐	33	☐	63	☐	93	☐	123	☐	153	☐	183	☐	213	☐	243	☐
4	☐	34	☐	64	☐	94	☐	124	☐	154	☐	184	☐	214	☐	244	☐
5	☐	35	☐	65	☐	95	☐	125	☐	155	☐	185	☐	215	☐	245	☐
6	☐	36	☐	66	☐	96	☐	126	☐	156	☐	186	☐	216	☐	246	☐
7	☐	37	☐	67	☐	97	☐	127	☐	157	☐	187	☐	217	☐	247	☐
8	☐	38	☐	68	☐	98	☐	128	☐	158	☐	188	☐	218	☐	248	☐
9	☐	39	☐	69	☐	99	☐	129	☐	159	☐	189	☐	219	☐	249	☐
10	☐	40	☐	70	☐	100	☐	130	☐	160	☐	190	☐	220	☐	250	☐
11	☐	41	☐	71	☐	101	☐	131	☐	161	☐	191	☐	221	☐	251	☐
12	☐	42	☐	72	☐	102	☐	132	☐	162	☐	192	☐	222	☐	252	☐
13	☐	43	☐	73	☐	103	☐	133	☐	163	☐	193	☐	223	☐	253	☐
14	☐	44	☐	74	☐	104	☐	134	☐	164	☐	194	☐	224	☐	254	☐
15	☐	45	☐	75	☐	105	☐	135	☐	165	☐	195	☐	225	☐		
16	☐	46	☐	76	☐	106	☐	136	☐	166	☐	196	☐	226	☐		
17	☐	47	☐	77	☐	107	☐	137	☐	167	☐	197	☐	227	☐		
18	☐	48	☐	78	☐	108	☐	138	☐	168	☐	198	☐	228	☐		
19	☐	49	☐	79	☐	109	☐	139	☐	169	☐	199	☐	229	☐		
20	☐	50	☐	80	☐	110	☐	140	☐	170	☐	200	☐	230	☐		
21	☐	51	☐	81	☐	111	☐	141	☐	171	☐	201	☐	231	☐		
22	☐	52	☐	82	☐	112	☐	142	☐	172	☐	202	☐	232	☐		
23	☐	53	☐	83	☐	113	☐	143	☐	173	☐	203	☐	233	☐		
24	☐	54	☐	84	☐	114	☐	144	☐	174	☐	204	☐	234	☐		
25	☐	55	☐	85	☐	115	☐	145	☐	175	☐	205	☐	235	☐		
26	☐	56	☐	86	☐	116	☐	146	☐	176	☐	206	☐	236	☐		
27	☐	57	☐	87	☐	117	☐	147	☐	177	☐	207	☐	237	☐		
28	☐	58	☐	88	☐	118	☐	148	☐	178	☐	208	☐	238	☐		
29	☐	59	☐	89	☐	119	☐	149	☐	179	☐	209	☐	239	☐		
30	☐	60	☐	90	☐	120	☐	150	☐	180	☐	210	☐	240	☐		

Shipyard _____ NB no _____ SG no _____ _____ In charge of loop testing

G002904

7.4 ID List

7.4.1 Prerequisite

The ID switch must be set on the address unit type AE and NS-AIN. The ID defines the function and the type of the unit connected to the address unit.

7.4.2 Setting the ID

The ID is set by the 4-pole (NS-AIN type) or 5-pole (AE type) DIP switch located on the address units. The DIP switch value follows the binary system as shown in the following figure.

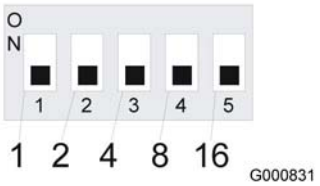

+ (' . /

The value of the ID is according to the switches set to the “ON” position as shown in the following figure:

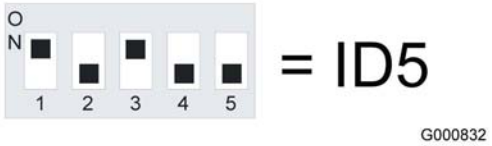

, (' . /

The switches numbered 1 and 3 are set to the ON position. The values for these switches are 1+4=5.

7.4.3 ID for NS-AIN type Address Units

The IDs for NS-AIN address units are listed in the table below:

- . 6 ' . 6

ID no.	Type of NS-AIN unit	Type of connected device	Switches set to “ON”
1	AIN2	Sprinkler	1
2	AIN1	Intrinsically safe unit	2
3	AIN1	Conventional detectors	1,2
4	AIN2	Conventional detectors	3
5	AIN1	Intrinsically safe unit (industry)	1,3
6	AIN1	Detector (industry)	2,3
7	AIN2	Sprinkler & valve	1,2,3
8	AIN2	Indication	4

(NS-AIN1 has constant sub-loop voltage, while NS-AIN2 has pulse voltage).

7.4.4 ID for AE type Address Units

The IDs for AE address units are listed in the table below:

0 . #

ID no.	Type of connected device	Switches set to "ON"
0	Heat detector	-
1	Sprinkler, water	1
2	Sprinkler, CO_2	2
3*	Smoke detector, ion	1,2
4*	Flame detector, IR	3
6	Sprinkler, foam	2,3
8*	Flame detector, UV	4
9*	Heat detector, constant sub-loop voltage	1,4
10	Door indication unit	2,4
11	Manual call point	1,2,4
13	Fire alarm from sub-central	1,3,4
16*	Smoke detector, optical	5
20	Sprinkler, halon	3,5
29	Intrinsically safe unit	1,3,4,5

* Constant sub-loop voltage

7.5 Connections for Loop Units

Connection of loop units 1/2

Detectors

NS-AOS
NS-AIS
NS-AH/AIS
NS-AOHS
NS-AH/CS
NS-AIHS
NS-AUV

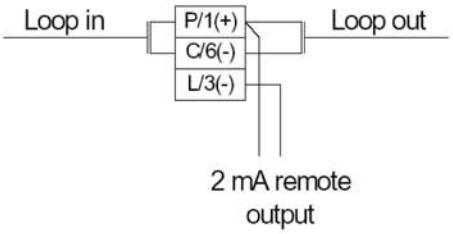

Manual call points

NS-ACP
NS-ACP IP55
NS-ACPWP

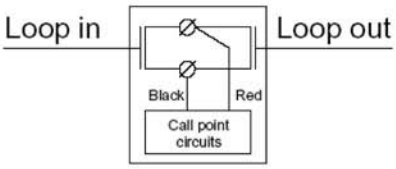

Short circuit isolator

NS-SCI

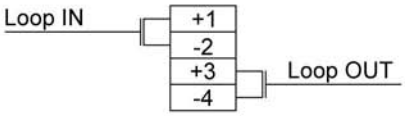

Timer

NS-TIMAC

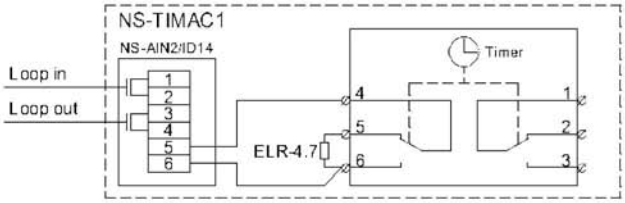

Address units

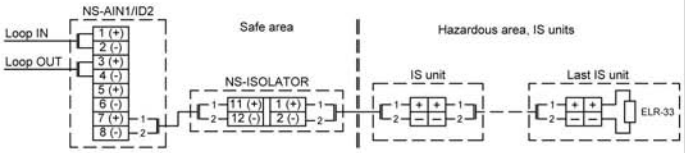

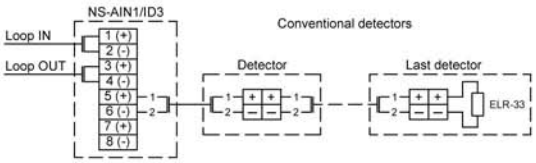

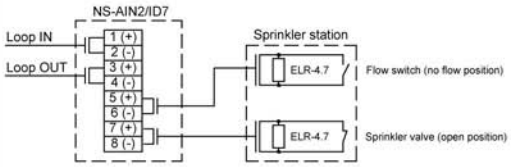

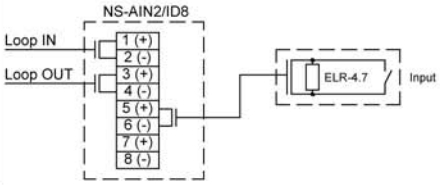

Addressable IS units

NS-AOS-IS
NS-AOHS-IS
ACP-IS

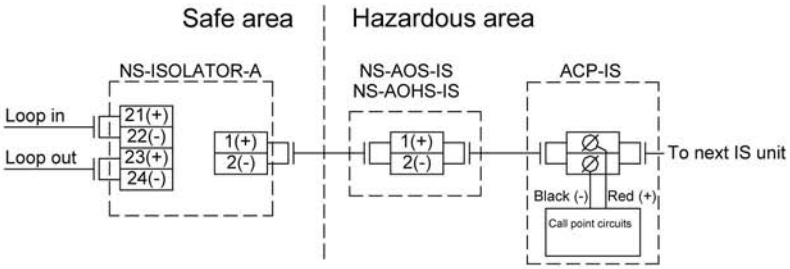

G000367

Connection of loop units 2/2

Address units

AE-2
AE-2K
AE-2K/I
AE-2E

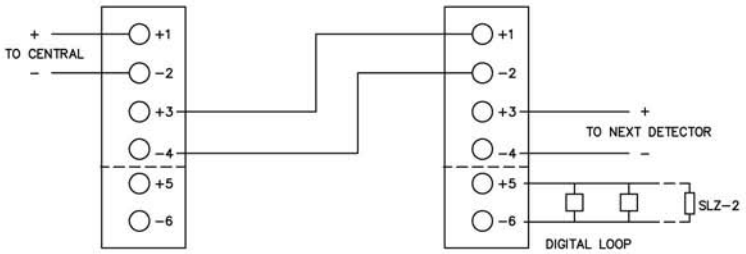

ID Switch

Heat detector	127	ON / OFF	Heat detector, constant subloop voltage	118	ON / OFF
Sprinkler, water	126		Door indication unit	117	
Sprinkler, CO2	125		Manual call point	116	
Ion smoke detector	124		Fire alarm from central	114	
IR flame detector	123		Optical smoke detector	111	
Sprinkler, foam	121		Sprinkler, halon	107	
UV flame detector	119		Instrinsically safe detector, ES–2K	99	

Detectors

RDJ-2
RDJ-2T
RDO-2
TDT-2
HA100-HA110
OA100-140
IA100-140

WITH BASES:
UB-1, UB-2
SPB-ADAPT

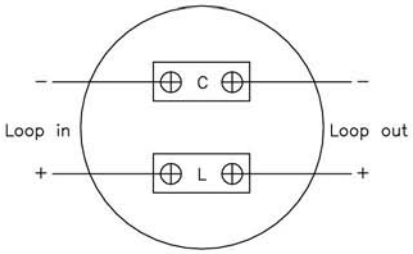

Evolution type detectors

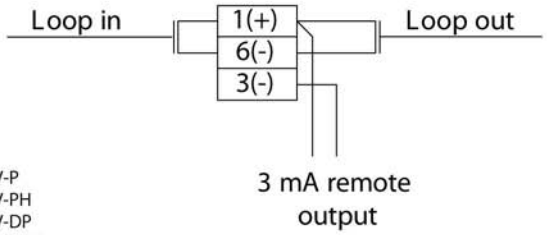

EV-P
EV-PH
EV-DP
EV-DPH
EV-H 54
EV-H 84
EV-H A1R

Loop units

KS-2, KS-2K
VE-1, VE-2
LK-2, LK-2K
SID-38
SID-38T
TDT-2K
UR-2K
UR-2KN
VL-2, VL-2K

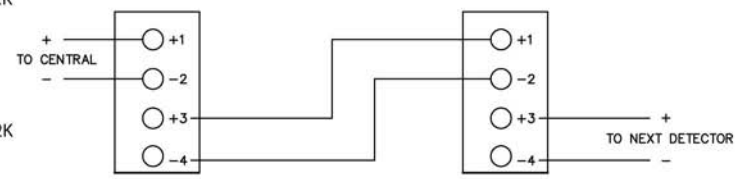

Manual call points

LKA01 ⊠ LKA05

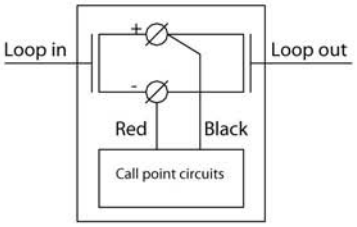

G000368

7.6 Central Unit Terminal & Cabling Layout

Description of System Modules

The Fire detection system is based on standard modules. Below is a list of some common modules:

+ 0 1
A Control Panel with a 4.3” display that manages and supervises a system and can act as bus master or slave.

) 0 1
A Repeater Panel with 4.3” display that can act as bus slave.

A Control Panel with a 2.2” display that manages and supervises a system and can act as bus master or slave.

2
A Control Module without display that can act as bus master or slave. It is used for providing additional communication channels in the system.

2
A module that supplies one Addressable Loop.

/ 3 &
A Module that provides 8 I/Os of type I/O 70. Each I/O can be programmed for use as: an input (max 70 mA), an output for buzzers, relays etc (max 70 mA) or a conventional detector zone.

/ 3 & &
A Module that provides 8 I/Os of type I/O 700. Each I/O can be programmed for use as: an input or an output for magnets, power supply etc (max 700 mA).

) . 4
A Module that provides 8 potential free contacts.

,
A Module that supervises and controls the power and battery functions.

, $
A change-over module that monitors mains and emergency power inputs.

5 /
Is used for dividing the system backbone bus into segments. Can provide power to Control Panel M 4.3 and Control M 2.2.

+ 6 * 7 *
A 5 ampere 115/230 VAC/VDC Power Supply.
PSU units can be used in pairs to supply 5+5 A.

For complete information, see the data sheet for each module.

An example of a central unit terminal layout with cabling

Since all Fire detection systems are tailored to each customer installation, no standard exists for how the different modules are to be connected in the system. However, in the figure below you will find an example with one module of each type showing the connection terminals.

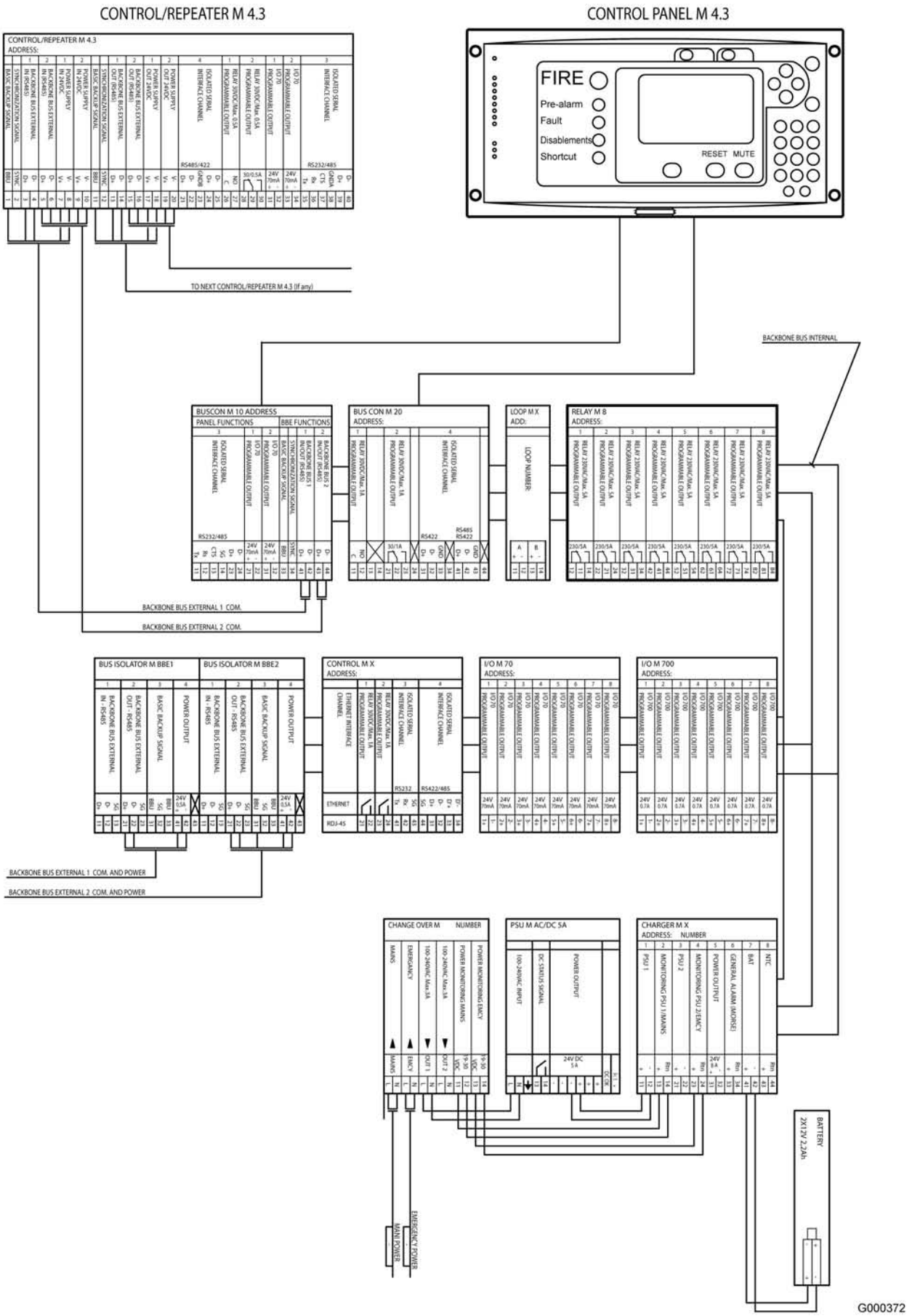

Figure 18. An example of a central unit terminal layout with cabling.

7.7 RS485 Termination

7.7.1 General Recommendations for Installation of RS485

General recommendations for RS485 installation:

- Twisted pair wire should be used
- Shielded cables
- Star networks are not permitted
- Termination shall be made at each end of the bus with a 120 ohm resistor
- Max 700 m cable in one communications segment
- Two-wire connection shall be used when nodes have a common ground (-)
- Three-wire connection shall be used when nodes have a different ground (-), for example between Isolator M.

7.7.2 Application Examples for Installation of RS485

▨	=	Activate the built-in terminator (120 ohm). See datasheet for location of the DIP switch.
■	=	Terminator 120 ohm

7.7.2.1 Terminating of BBE and Extensions bus

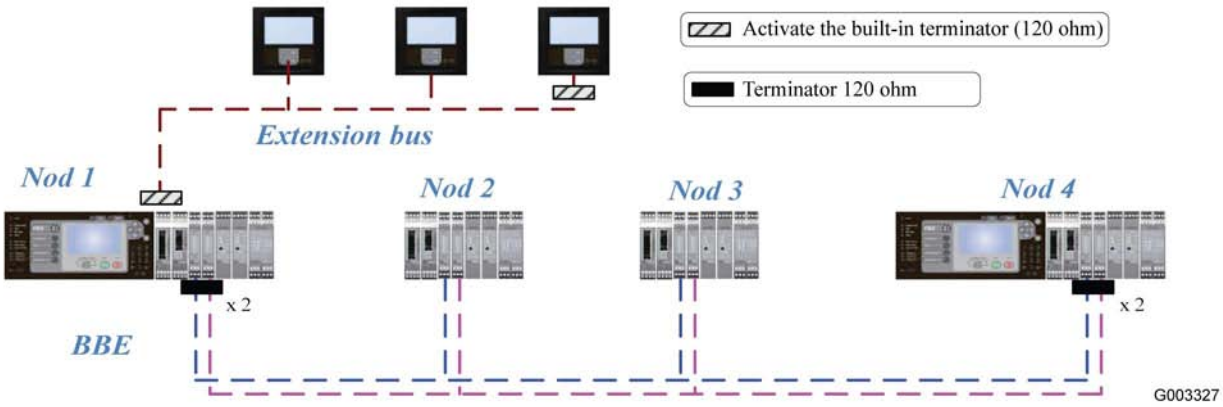

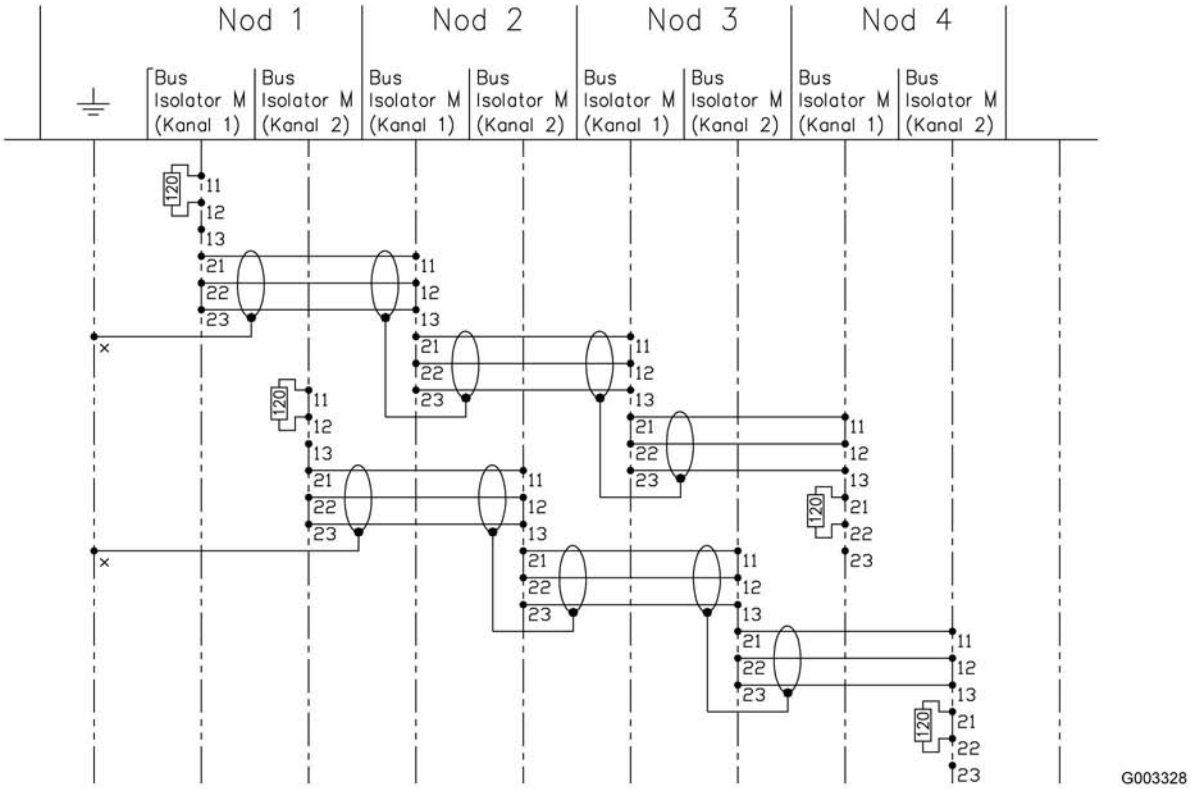

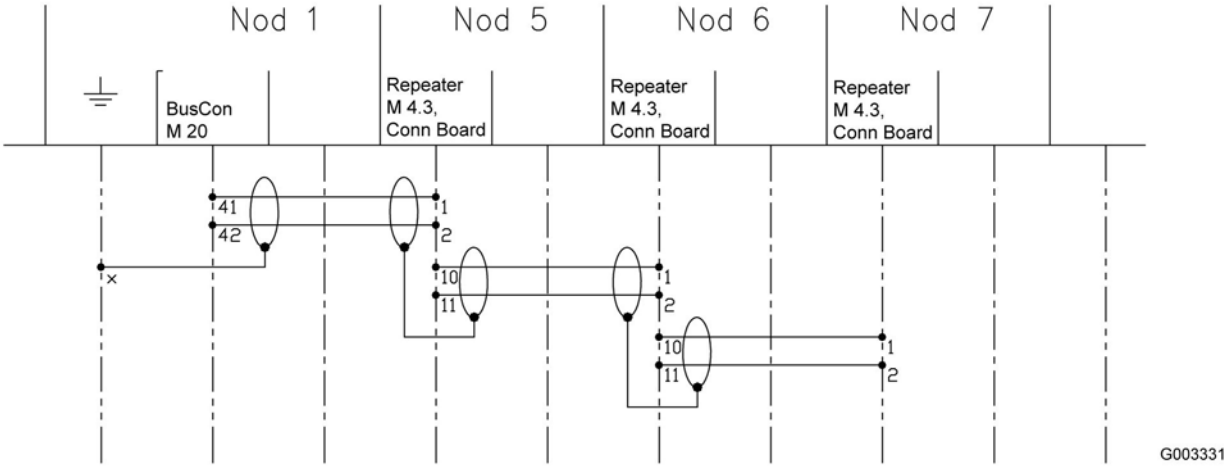

7.7.2.2 Terminating of BBE example 1

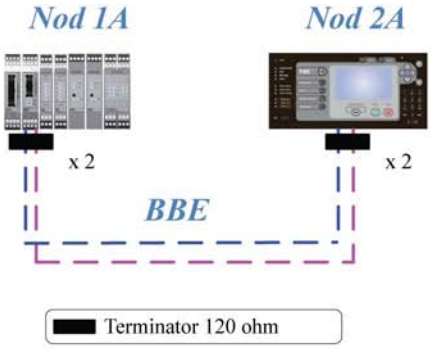

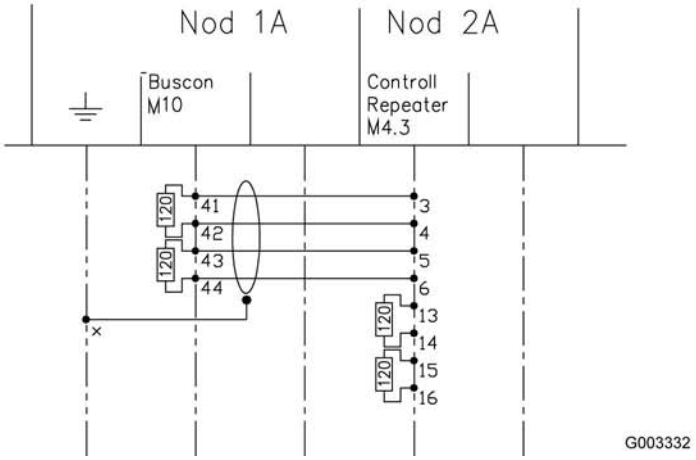

7.7.2.3 Terminating of BBE example 2

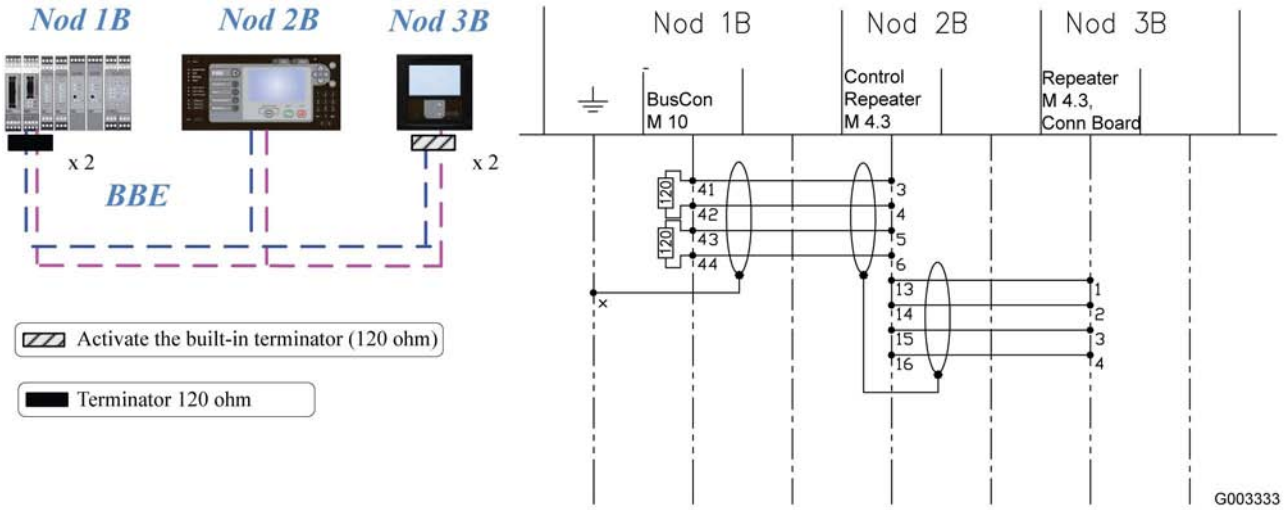

7.7.2.4 Terminating of modules (BBI) mounted on single DIN rail

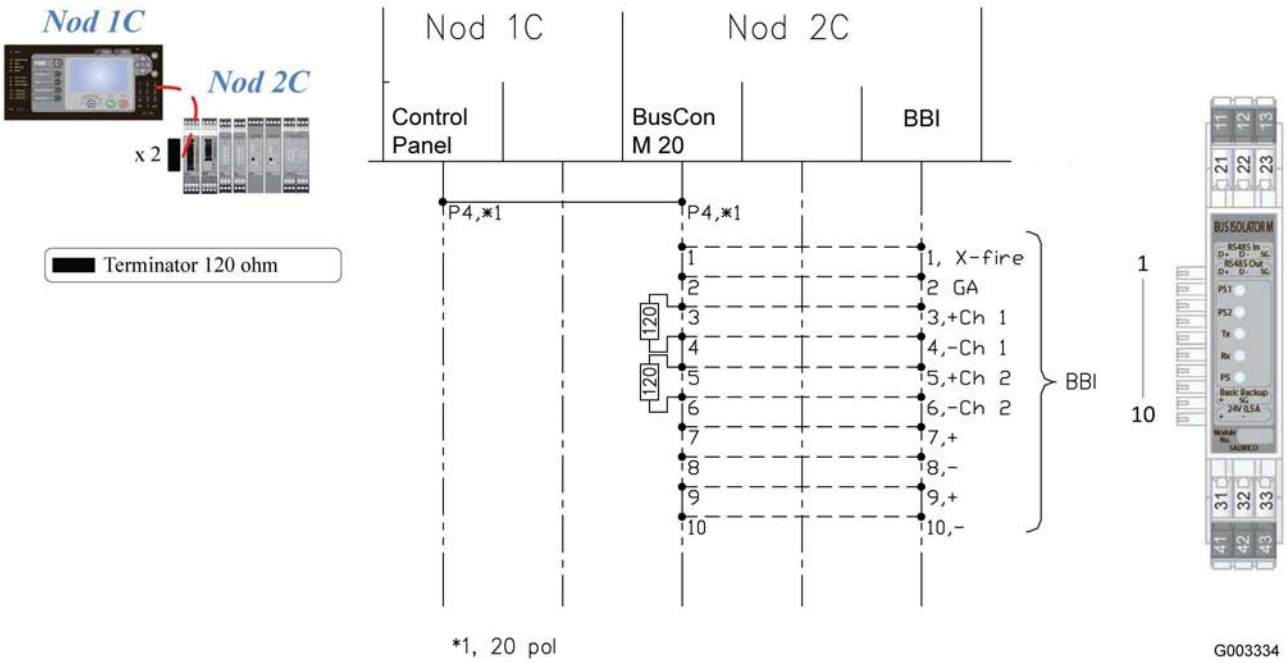

7.7.2.5 Terminating of modules (BBI) mounted on more then one DIN rail

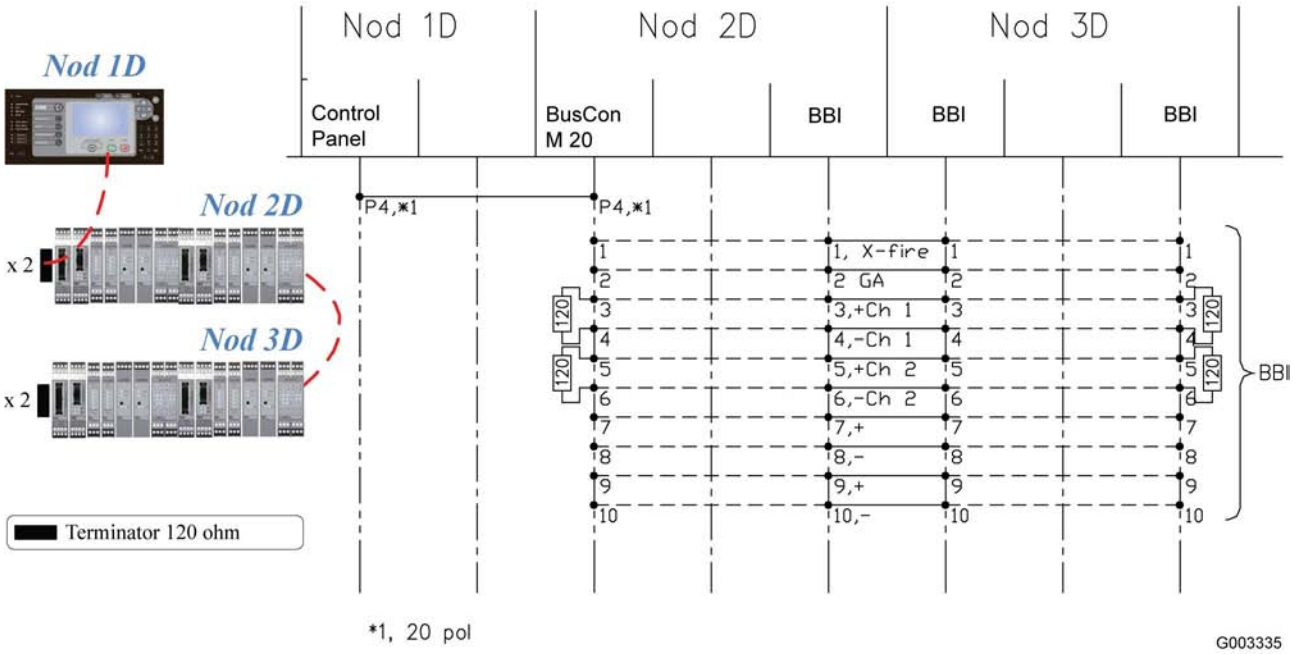

7.8 Fault Code List

Listed in the table below are all fault codes, their causes, and how an operator with knowledge of the system can solve the problem.

1

Fault Code		Cause	Remedy
128	" * " 8 $)	Explanation: Lost communication. The system has recognized a unit but lost contact.	
		Wrong type of loop unit	Switch to the correct loop unit
		Two loop units have the same address (a secondary fault appears)	Check address of the units. Rescan the loop.
		Defect unit	Replace the unit. Refer to the Installation manual or Service & Maintenance manual: Setting the Address on Loop Units Instructions for Address Programming Tool
		Cable break or short circuit in a loop (a secondary fault appears)	Locate the cable break or short circuit. Refer to the Installation manual or Service & Maintenance manual: Cable Break Short Circuit

Fault Code		Cause	Remedy
129	$ ") ' * 6 #	The detector has a faulty sensor element	Replace the unit. Refer to the Installation manual or Service & Maintenance manual: Setting the Address on Loop Units Instructions for Address Programming Tool
		The smoke detector is exposed to strong airflow	Protect the detector from the airflow or consider repositioning the detector.
130	7 /) # 9 $ ")	The detector has a dirty (polluted) sensor element	Replace the detector. Refer to the Installation manual or Service & Maintenance manual: Setting the Address on Loop Units Instructions for Address Programming Tool
131	# ' $ 8 + 6 " / # ' 6 " 7	Fewer loop units found than configured. Loop units not correctly installed or addressed.	Check the loop configuration or reconfigure the system
			Address the unit correctly. Refer to the Installation manual or Service & Maintenance manual: Wrong Number of Loop Units (only for Addressable Loops on Loop M X)
		Missing answer from a unit	Check address (possible double address). Otherwise replace the unit. Refer to the Installation manual or Service & Maintenance manual: Wrong Number of Loop Units (only for Addressable Loops on Loop M X)
132	# * " 9 + 6 " / # ' 6 " 7	More loop units found than configured	Check the specification or reconfigure the system. Refer to the Installation manual or Service & Maintenance manual: Wrong Number of Loop Units (only for Addressable Loops on Loop M X)
		Loop units not correctly installed	Address the unit correctly. Refer to the Installation manual or Service & Maintenance manual: Wrong Number of Loop Units (only for Addressable Loops on Loop M X)
133	/ " (* 5 $ 5) $ *	There is a cable break on input 1	Check that the cable between input and end of line resistor is complete
134	/ " * 5 $ 5) $ *	There is a cable break on input 2	Check that the cable between input and end of line resistor is complete
135	$ 2 # 0 : ' * /	External 24V power source missing or the local power supply unit is defective	Check the local power supply unit and consider replacing
136	' $ $ 7 5 * ' * 6 #	External load is missing	Check the cable and the external load
137	+ / # / " ' * 6 #	A supervised unit (for example, a door or damper) is in the wrong position	Check for obstructions
138	+ ;) # /) 6 / #	A short circuit in the detector loop cable	Locate the short circuit. Refer to the Installation manual or Service & Maintenance manual: Short Circuit

Fault Code		Cause	Remedy
139	+ * ;) # /) 6 / #	Short circuit on the A-side of a detector loop	Locate the short circuit. Refer to the Installation manual or Service & Maintenance manual: Short Circuit
140	+ 5 ;) # /) 6 / #	Short circuit on the B-side of a detector loop	Locate the short circuit. Refer to the Installation manual or Service & Maintenance manual: Short Circuit
141	* 5 $ 5) $ * + / # / : $	A cable break on the positive conductor has been detected	Locate the cable break. Refer to the Installation manual or Service & Maintenance manual: Cable Break
142	* 5 $ 5) $ * " $ < * # / : $	A cable break on the negative conductor has been detected	Locate the cable break. Refer to the Installation manual or Service & Maintenance manual: Cable Break
143	6 " / * # / " $)))	Explanation: The communication with a unit is deficient	
		Two units have the same address	Check the loop unit addresses. Refer to the Installation manual or Service & Maintenance manual: Setting the Address on Loop Units Instructions for Address Programming Tool
		Faulty loop unit	Replace the unit. Refer to the Installation manual or Service & Maintenance manual: Setting the Address on Loop Units Instructions for Address Programming Tool
		Interference from external source	Locate interference source. If not possible to solve the problem, contact an authorized service office
144	+ 6 " / # # 9 + $; * " < $ 7	The type of unit found in the loop is different from the original type configured	Accept the unit found or replace to original type
145	6 " " 8 " # 9 + $ ' + 6 " / # ' 6 " 7	Explanation: The type of unit found is not recognized by the system	
		Faulty unit	Replace the unit
		Wrong type of detector has been installed	Install the correct type and restart the loop
146	# / $) # 6	The timer has been activated for too long	Reset the timer to zero
148	7 6 5 $ * 7 7) $	Two units with the same address on a loop has been found	Change one of the addresses. Rescan or restart the loop. Refer to the Installation manual or Service & Maintenance manual: Wrong Number of Loop Units (only for Addressable Loops on Loop M X)
149	;) # /) 6 / #	Short circuit detected	Locate the short circuit and restore operation
150	: * : $ $ 7	The valve is closed	Open the valve

Fault Code		Cause	Remedy
151	"'/<6)$7" # +)$ $"#	Unit is configured but not found	Verify if unit address is correct. Verify there is power to the module. Contact an authorized service office.
152	+)$ $"#" # "'/<6)$7	Unit present but not configured	Verify if unit address is correct. Verify there is power to the module. Contact an authorized service office.
153	;/<; 6))$"# " +	The high current has exceeded acceptable levels	Check if there are too many units connected to the loop. Refer to the Installation manual or Service & Maintenance manual: Loop Lengths
155	$*)#;'*6 # + /#/:$	Earth fault on the positive conductor	Locate the earth fault. Refer to the Installation manual or Service & Maintenance manual: Earth Fault
156	$*)#;'*6 # "$<*#/:$	Earth fault on the negative conductor	Locate the earth fault. Refer to the Installation manual or Service & Maintenance manual: Earth Fault
157	'6 $'*6 #	A blown fuse	Replace the fuse
158	5*##$)9 *5 $'6 $ '*6 #	A battery fuse has blown or a cable to the battery is broken	Replace fuse or restore the cable
159	*5 $ 5)$*	A cable break has been detected	Restore the cable
160	*5 $:$) *7	Too high current on the output	Check external loads
162	$ $)<$" 9 + 8$) '*6 #	Emergency power is lost	Check the emergency power supply
163	5*##$)9 '*6 #	Low battery voltage detected	Charge the battery. If the fault remains, replace the battery. Refer to the Service & Maintenance manual:
164	5*##$)9 ;*)<$)	The battery charger is unable to charge the battery	Replace the battery charger
165	$2#$)"* '*6 #	External equipment is indicating a fault	Check the external equipment
166	$*)#;7$#$ #/ " '*6 #	The module is unable to detect earth fault	Contact an authorized service office
167	C;$ 6 $$+	Incorrect EPROM checksum	Contact an authorized service office
168	)$ #*)#$7	A module has restarted	If restarts happen repeatedly, contact an authorized service office
169	# "<5 # #/ $	A module has been in state validating or configuration for too long	Contact an authorized service office
170	$2#$)"* *7	There is too high external load on a conventional zone	Check the load and reduce if possible
171	$2#$)"* + 8$) 6) $	Unexpected voltage detected in a conventional zone	Locate and remove the source
172	8 + 8$) 6++ 9 + 6(	Low voltage on the primary 28VDC power supply to the internal system modules	Contact an authorized service office

Fault Code		Cause	Remedy
173	8 + 8 $) 6 + + 9 + 6	Low voltage on the secondary 28VDC power supply to the internal system modules	Contact an authorized service office
174	8 / " # $) " * + 8 $)	Too low voltage on the 3.3V/5V feeding to the internal circuit boards	Replace the module
175	8 + 8 $) 6 + + 9 + $) * # / " <	Too low incoming 24VDC supply to the internal circuit boards	Contact an authorized service office
176	9 # $ " ' / < 6) * # / " ' * 6 #	The configuration file is corrupt	Contact an authorized service office
		An error has occurred during downloading of the configuration file	
177	8 +) $ 6) $	External equipment indicates low pressure	Check the pressure on the supervised unit
178	* # 6 * #) (	Missing feedback from actuator 1	Check cables to actuator 1. If the cables are OK, change the actuator.
179	* # 6 * #)	Missing feedback from actuator 2	Check cables to actuator 2. If the cables are OK, change the actuator.
180	* / " + 8 $)	The main power supply is lost	Check the main power supply
181	/ " # $) " * ' * 6 #	Internal system fault	Contact an authorized service office
182	$ 2 # $) " * ' /) $		Contact an authorized service office
183	" * " 8 $) ; (5 * 5 " $	Fault code generated when a module stops answering on channel 1 on the Backbone Bus	Contact an authorized service office
184	" * " 8 $) ; 5 * 5 " $	Fault code generated when a module stops answering on channel 2 on the Backbone Bus	Contact an authorized service office
209	8) " < # 9 + $ ' + 6 " / # ' 6 " 7	The type of loop unit found is different from the type configured	Change the loop unit and re-scan the loop
210	* 6 $ $ ' ' $ # $)))	Fault detected in the configuration	Contact an authorized service office
212	9 " ;) " / * # / " / < " *	The synchronisation signal in the backbone is corrupt	Contact an authorized service office
213	" ' / < " # 9 " ;) " / = $ 7	The configuration file's in the system are not the same everywhere	Synchronise the configuration files between all panels
		Central X Module Y settings in configuration file compared to DIP-settings are not OK.	Check configuration and DIP-settings.
214	+ 8 $) 6 + + 9 / / # $ 2 $ $ 7 $ 7	The PSU charges with a current that exeeds the maximum allowed current for a charger module	Check the number of modules configured or check the external load
215	; *) < / " < 6)) $ " # $ 2 $ $ 7 $ 7	The battery is charged with more than the allowed charging current	Change the battery externally
216	/ " + * # / 5 $ ' /) 8 *) $	The firmware in a module does not comply with the modules hardware version. (Fault code generated by the faulty module.)	Contact an authorized service office
217	; / < ; : # * < $ + 6 (	The voltage from PSU 1 is too high. (Fault code generated by the Charger M modules.)	Adjust the voltage from the PSU 1

Fault Code		Cause	Remedy
218	; / < ; : #* < $ + 6	The voltage from PSU 2 is too high. (Fault code generated by the Charger M modules.)	Adjust the voltage from the PSU 2
219	' 6 $ ' * 6 # + 6 (	The fuse protecting the PSU 1 voltage input is broken. (Fault code generated by the Charger M modules.)	Contact an authorized service office
220	' 6 $ ' * 6 # + 6	The fuse protecting the PSU 2 voltage input is broken. (Fault code generated by the Charger M modules.)	Contact an authorized service office
221	+ 6 (+) $ $ " # " # " ' / < 6) $ 7	PSU 1 is found but not configured in the configuration file. (Fault code generated by the Charger M modules.)	Check the configuration file
222	+ 6 +) $ $ " # " # " ' / < 6) $ 7	PSU 2 is found but not configured in the configuration file. (Fault code generated by the Charger M modules.)	Check the configuration file
223	/ " # $) " * : #* < $ 8	The voltage level from the Charger M is too low. (Fault code generated by the Charger M modules.)	Contact an authorized service office
224	/ " # $) " * : #* < $; / < ;	The voltage level from the Charger M is too high. (Fault code generated by the Charger M modules.)	Contact an authorized service office
225	2 ' /) $ / < " *	The XFIRE signal in the backbone is corrupt	Contact an authorized service office
226	+) / *) 9 9 # $ 5 6	No traffic is detected on the Primary System Bus	Contact an authorized service office
227	$ " 7 *) 9 9 # $ 5 6	No traffic is detected on the Secondary System Bus	Contact an authorized service office
228	" * " 8 $) 9 # $ 5 6	The module has stopped answering on the system bus	Replace the module
229	: $) ; $ * # $ 7	The battery or Charger M is too hot. (Fault code generated by the Charger M module.)	Contact an authorized service office
230	8 : #* < $; * 5 * 5 " $	Too low voltage detected on the Backbone Bus Power Supply, channel A. (Fault code generated by the Charger M modules.)	Contact an authorized service office
231	8 : #* < $; 5 5 * 5 " $	Too low voltage detected on the Backbone Bus Power Supply, channel B. (Fault code generated by the Charger M modules.)	Contact an authorized service office
232	)) 6 + # ' /) 8 *) $		Contact an authorized service office
233	) $ * 9 6 # + 6 #	A relay is broken or in a state that damages the relay. (The voltage over the relay coil is too high.)	Replace the module
236	8) " < # 9 + $ ' 7 6 $ ' 6 " 7	The type of module found is different from the type configured	Change the module or the system configuration
237	; / #) 9	Generated by a Control module which detected that it has an SD memory card but fail to write history log to it.	First step: Replace the SD card. Contact an authorized service office.

Fault Code		Cause	Remedy
238	' 8 '*6 #	Generated by the Loop M X when the fan in an aspiration detector don't rotate. NOTE: Critical error, can cause the detector does not alarm.	First step: Check the power supply to the aspiration detector. Contact an authorized service office.
239	<* $)))	Generated by modules that have GA-defined function and the voltage on the bus for the GA (General Alarm) is too low (BBI). NOTE: Critical error, can cause the GA stops working.	First step: Check that Charger M puts out a monitoring voltage on the BBI. Contact an authorized service office.
255	/ $<*	Internal system error	Contact an authorized service office

7.9 Definitions of Terms

Alarm Condition	The state of the system when a fire or gas alarm is detected.
Alarm Delay	When activated the activation of Alarm Devices will be delayed for a preset time (normally 2 minutes).
Alarm Device	Device that is activated in case of fire, for example audible and optical alarms like bells, sirens and flashlights.
Alarm Transfer Output	A supervised output for signalling that a fire has occurred. The Alarm Transfer Output is usually used in onshore systems for alerting the Fire Brigade.
Backbone Bus External (BBE)	The main bus outside a Central cabinet used for communication between Modules and stretched central parts. It consists of two redundant RS485 channels, two 24 VDC power lines and the Basic Backup (BBU) signal and Synchronisation Signal (SYNC).
Backbone Bus Internal (BBI)	The main bus inside a Central Cabinet used for communication between Modules. It consists of two redundant RS-485 channels, two 24 VDC power lines and the Basic Backup (BBU) signal and Synchronisation Signal (SYNC).
Backbone Segment	A Backbone Bus may be split in several Segments. Power feeding can be separate for each segment by using one Charger M per segment. Communication can be isolated between segments by using Isolator Modules.
Basic Backup Signal (BBU)	A signal in the Backbone Bus that is used for transmitting the Central's alarm status. The signal is only used when a module in Managed mode loses communication with its Controller Module.
Cause/Effect	The Cause/Effect program defines how the inputs and outputs of the system should react.
CCP Platform	An umbrella name for all the Modules and Devices that can be connected together, e.g. "the Control M 4.3 Module is a member of the CCP Platform".
Central	A Central is a complete system that can operate autonomously; monitor its detectors and inputs, activate its outputs and display its faults and alarms. If connected to other centrals, it exchanges information with the other centrals via the System Bus, thus allowing all centrals to act as one System. Each central can only have one Backbone Bus.
Central Cabinet	Enclosure to contain a complete or part of a central.
Compact Central	Central Cabinet including basic functionality of Fire Detection System such as: Control Panel, Power supply, Battery backup, Basic I/Os and at least one analogue addressable loop. The Cabinet supplies limited expansion possibilities.
Control Module	The Control M 4.3, the Control M 2.2 and the Control M X can all act as Controller Modules, i.e. be in Controller Mode.

Control Panel	The Control M 4.3 and Control M 2.2 can act as a Control Panel, i.e. they have an HMI and the rights to manipulate and supervise the System.
Controller Mode	Control Modules can run in Controller Mode, i.e. being Master or Hot Standby Master within a central. Control Modules can also be in managed mode, that is being a module that is managed by the master. All other modules are always running in managed mode.
Controller Module	A Control Module that is in Controller Mode (master or hot standby) in a Central or System.
DCS	Distributed Central System (see also Stretched Central).
Detector	A device capable of detecting fire or gas alarms.
Disablement	Disablement of devices such as a Zones or Detectors. Alarms from disabled devices will be inhibited.
ESD System	Emergency Shut Down System, embedded system taking care of safety procedures in case of emergency, for example shut down of fire doors, ventilation etc.
Extension Bus	An additional (RS485) bus used inside a central for intra-central communication. The Extension Bus is typically used for connecting Repeater Modules (that does not require redundant communication and power) and should not be confused with the Backbone Bus.
External Communication	Communication to external entities is called external communication, using for example MODBUS, NMEA or TCMS protocols.
External Control	Outputs used to control external equipment, for example fire doors.
Fault Condition	The state of the system when a fault is detected.
GA-auto	Automatically generated signal according to a pre-defined pattern (e.g. 7 short 1 long signal) for alarm devices or the PA system.
GA-Morse	Signal pattern generated manually via the GA button.
GA	General alarm, common activation of alarm devices and activation of the PA system.
Hot Standby Mode	Controller Modules in Hot Standby Mode can take over the responsibilities of the Controller Module managing a Central.
I/O 70	An Input/Output type providing a different function depending on the configuration of the system. The programmable functions are: • General Input • Fault Input • Conventional Fire Alarm Zone • Output (24 VDC/70 mA)
I/O 700	An Input/Output type providing a different function depending on the configuration of the system. The programmable functions are: • General Input • Fault Input • Output (24 VDC/700 mA)
I/O Module	A module with inputs and/or outputs. I/O modules always run in Managed Mode, that is they must be managed by a Controller Module.
I/O Pin or I/O Signal	An I/O Pin or an I/O Signal is a logical signal, compare to terminal.
Inter-central Communication	Communication between centrals is called inter-central communication.
Interface Channel	A communication channel used to interface the systems with external devices. Interface channels can be configured to communicate on different protocols.

Intra-central Communication	Communication within a central is called intra-central communication. This communication is between modules.
Loop	A common name for the cable, loop devices and other equipment connected to a loop module.
Loop Device	Fire Detectors, Gas Detectors, Manual Call Points and other devices that can be connected to the Loop.
Loop Module	A Module supplying power and is in charge of communication to the loop devices.
Managed Mode	The opposite of Controller Mode. All modules that are managed by a Controller Module are in Managed Mode.
MCS	Multi Central System. A System consisting of more then one Central.
MFZ	Main Fire Zone.
Mode of operation	Modules in the System can take on different roles. Connected to the Backbone Bus they can be in: • Central Controller Mode (Master or Hot Standby) • Central Managed Mode Modules connected to the System Bus can be in: • System Controller Mode (Master or Hot Standby) • System Managed Mode
Module	A module that is a part of the Platform, that is can be used to build Centrals. Modules within the platform generally supply a Backbone Bus interface. Controller Modules also have a System Bus Interface.
Module Address	Module Addresses are set via DIP switches on the Modules.
Mute	Acknowledge and silence the local buzzer and in some cases the alarm devices.
PA	Public Addressing.
Power Output	Output providing power supply, normally used to power external devices.
Pre-Alarm Condition	A condition preceding the Alarm Condition to give early warning for potentially dangerous situations like a smouldering fire.
Programmable Output	Output which signal behaviour is configurable via the Configuration Program.
PSU	Power Supply Unit.
Rate of Rise	Rate of Rise functionality by using C/E commands for setting of a different alarm threshold and temperature rise threshold for heat detectors.
Redundancy	Refers to the quality or state of being redundant, that is exceeding what is necessary or normal. In the System the term is used to describe backup functionality like in Hot Standby Controller Modules.
Relay	Electrically operated switch output, normally providing C/NO/NC contacts for connection of signal receiver.
Repeater Panel	The main attribute for Repeater Panels is that they can show information but not affect the Central (or System) they belong to. The Repeater M 4.3 is a Repeater Panel.
Safe State	Modules enter 'safe state' when they detect system faults. Modules in Safe State put their I/O in a predefined state and stop all communication in order to avoid disturbing system integrity.
SCS	Single Central System.
SMig system	Salwico Safety Management interactive graphics, a PC-based software package providing graphical presentation and control of the System.

Stretched central (DCS)	A central that is physically distributed to two or more physical locations. One location may or may not supply power to another location (segmented) and two locations may or may not have isolated communication lines.
Synchronization Signal	A signal in the Backbone Bus that is used for transmitting synchronization signal used by system Modules to synchronize there behaviour.
System	A System consists of one or more Centrals.
System Bus	The communication bus used for connecting multi-central systems. The System Bus is used for inter-central communication but can also be used for external communication. If inter-central communication redundancy is required, the system bus will consist of a primary and a secondary System Bus.
Terminal	A Terminal is a physical point of connection, compare I/O pin.
Test Condition	Detectors put in the Test Condition (or Test Mode) are inhibited from generating the Alarm Condition but the alarms are displayed on the Control Panels to prove that the tested Detectors are operational.
USB	Universal Serial Bus, a communications bus that may be used to connect flash memories, keyboards, mice or other devices.
Warning Condition	The state of the system when a warning is detected. Warnings are not as serious as faults and only of informative nature, for example that a Gas Detector is in need of calibration.
Zone	A group of detectors located in a geographical area.

Index

A

About testing 22
Address programming tool, Instructions for 17
Address units, Setting the address 16
Address units, ID for AE type 56
Address units, ID for NS-AIN type 55
Address units, Installation guidelines 42
Addressable indication units, Setting the address .. 16
Addressable timers, Setting the address 17

B

Backbone Bus External (BBE), Electrical installation 8
Bells, Installation guidelines 43
Bus Isolator M 59

C

Cable break, Trouble shooting 26
Cable requirements, Electrical installation 8
Cabling, Installation guidelines 44
Central status 38
Central unit terminal layout with cabling 59
Change Over M Ext 59
Charger M 59
Cold room Heat detectors, Installation guidelines . 42
Commissioning requirements 37
Control M 2.2 59
Control M X 59
Control Panel M 4.3 59
Control Panel M 4.3, Installation order 7
Control panel display, Testing 25
Control panels, Mechanical installation 7
Control panels, Electrical installation 19
Conventional high temperature Heat detectors, Installation guidelines 41

D

Detector loops, Cable requirements 8
Detector loops, Electrical installation 10
DIP switch, Setting the ID .....
Disablement list .....
Door holder magnet 130kp, Installation guidelines .....
Door holder magnet 65kp, Installation guidelines .
Door release switch, Installation guidelines .....
Download system log file .....

E

Earth fault, Trouble shooting .....
Electrical siren, Installation guidelines .....
Electrical equipment, Location of .....

F

Fault list .....
Fault list .....
Fault report .....
Fault list .....
Fire detection system, System description .....
Fire detection system, System data .....
Fire history list .....
Fire history list .....
Firmware Update Tool, Troubleshooting .....
Firmware, Upgrade in a complete CCP system .....
Firmware, Upgrade in a control module via Ethernet .....
Flame detectors, Installation guidelines .....

G

Guidelines, Loop units installation .....

H

Heat detector, Installation guidelines .....

I

I/O M 70 .....
I/O M 70, Connection to .....
I/O M 700 .....
Installation guidelines, Cabling and electrical installation .....
Installation order, Mechanical installation .....
IS Smoke detector for EX areas, Installation guidelines .....

L

Loop lengths, Electrical installation .....
Loop M X .....
Loop M X, Connection to .....
Loop units without address switches, Setting the address .....
Loop units, Setting the address .....
Loop configuration .....
Loop status .....
Loop units with address switches, Setting the address .....
Loop units, Connections for .....
Loop units, Mechanical installation .....
Loops, Verification of .....

M

Manual call points, Installation guidelines .....
Muting faults, Trouble shooting .....

P

Polarity fault .....
PSU M AC/DC 5A .....

R

Relay M 8 59
Repeater M 4.3 59
Report a fault 35
Reset faults, Trouble shooting 27
Reset test mode 24
RS485 Termination 61
RS485, Application examples for installation 61

S

Short circuit isolators, Setting the address 17
Short circuit, Trouble shooting 27
Short circuit isolator, Installation guidelines 42
Smoke detector, Installation guidelines 39
Start the Firmware updater tool 30
System log file 34
System modules, Description 59

T

Terminal layout, Electrical installation 18
Test Equipment 24
Test for earth failure 15
Test for short circuits 14
Test mode overview 23
Test for cable break 13
Test the control panel display 25
Testing a fire-detecting zone 23
Timers, Installation guidelines 43

U

Upgrade firmware in Control M 4.3, Repeater M 4.3, Control M 2.2 28
Upgrade firmware in Control M X 28
Upgrade firmware in remaining CCP modules 28
Upgrade for control modules i large systems 33
Upgrade modules in the following order in large systems 33
Upgrade strategy large systems 32

W

Wrong number of loop units, Trouble shooting 25

Z

Zone, Test mode .....

Global Service and Support

Own companies

Sales- and service representatives

Consilium is constantly increasing and improving its global sales and service organisation in order to provide our customers with the most competent service and support. Today Consilium has established own companies in 16 countries plus sales and service representatives in more than 50 countries. You will find updated contact information on our web-site www.consilium.se.

Consilium

www.consilium.se

Manual

Consilium

Salwico Cargo Addressable

Fire Detection System

User Guide

Consilium Marine & Safety AB
Fire & Gas Marine Division
Phone: +46 31 710 77 00
Fax: +46 31 710 78 00
E-mail: Service: service@consilium.se
Spares: spares@consilium.se

Consilium Marine & Safety AB
Navigation Division
Phone: +46 8 563 05 100
Fax: +46 8 563 05 199
E-mail: Service, APT: service-navigation@consilium.se
Spares: spares-navigation@consilium.se

Consilium Marine & Safety AB
Transport Division
Phone: +46 31 710 77 00
Fax: +46 31 710 78 00
E-mail: Service: transport@consilium.se
Spares: transport@consilium.se

The contents of this document are subject to revision without notice due to continued progress in methodology, design and manufacturing. Consilium assumes no legal responsibility for any error or damage resulting from the usage of this document.

December 2012
Document no. 5100332-01_Salwico Cargo Addressable_User Guide_M_EN_2012_N
Part no. 5100332-01

© Copyright 2012, Consilium Marine & Safety AB

1 Introduction ***1***

1.1 About This Manual ***1***

1.2 Approvals ***2***

1.3 Symbols used in the manual ***2***

2 Fire Detection System ***3***

2.1 System Description ***3***

2.2 System Block Diagram ***3***

3 Control Panels ***5***

3.1 Control Panel M 4.3 ..... ***5***

3.1.1 General 5
3.1.2 Description of Keys and Indicators 5
3.1.3 Menu System 9

3.2 Repeater M 4.3 ..... ***18***

3.2.1 General 18
3.2.2 Description of Keys and Indicators 18

4 Operations ***21***

4.1 Access Levels ***21***

4.2 Login ***22***

4.3 Pre-Alarm ***22***

4.4 Fire Alarm ***22***

4.4.1 Information Displayed when “Fire” is Flashing 22
4.4.2 Mute a Fire Alarm 23
4.4.3 Reset a Fire Alarm 24
4.4.4 Several Alarms 24
4.4.5 Type of Fire Alarms from Conventional Zones 24

4.5 Fault Alarm ***24***

4.5.1 Information Displayed when “Fault” is Flashing 24
4.5.2 Mute a Fault 25
4.5.3 Reset a Fault 25
4.5.4 Reset a Fault from the Fault List 25
4.5.5 Reset All Faults .....
4.5.6 Fault Messages .....

4.6 Disablements .....

4.6.1 About Disablements .....
4.6.2 Available Types of Disablements .....
4.6.3 Acknowledgement of a New Disablement .....
4.6.4 Disabling Zones .....
4.6.5 Disabling Addressable Detectors & Manual Call Points .....
4.6.6 Disabling Alarm Devices .....
4.6.7 Old Disablements .....
4.6.8 Disabling Alarm Delay .....

4.6.9 Disabling External Control Groups 29
4.6.10 Disabling an Alarm Transfer Output 30

4.7 Reconnecting 30
4.7.1 Reconnecting Disabled Items 30
4.7.2 Reconnecting Periodic Disablements 30
4.7.3 Remove All Disablements 30

4.8 Service Menu 31
4.8.1 About the Service Menu 31
4.8.2 Copy the System Log to a USB Memory Stick 31

5 Testing 33

5.1 About Testing 33

5.2 Test Mode Overview 33

5.3 Testing a Fire-detecting Zone 33

5.4 Recommended Test Equipment 34

5.5 Reset Test Mode 34

5.6 Test the Control Panel Display 35

6 Appendix 37

6.1 Fault Code List 37

6.2 Definitions of Terms 42

7 Quick Guide for Control Panel M 4.3 47

Index 48

1 Introduction

1.1 About This Manual

This User Guide is intended for personnel using the Fire detection system and provides basic understanding how to operate the system.

NOTE!
This user guide has been revised based on version 1.6.0 but is valid for Control panel software versions beginning with version 1.0.0.

The chapter Fire Detection System gives general information about the system.

The chapter Control Panels describes the function of the Control panel and the Repeater in the Fire detection system.

The chapter Operations describes how to operate the Fire detection system.

The chapter Testing provides brief instructions on how to connect and test the system (detailed information is found in the Service & Maintenance manual).

The Fault Code List in the Appendix lists the different fault codes.

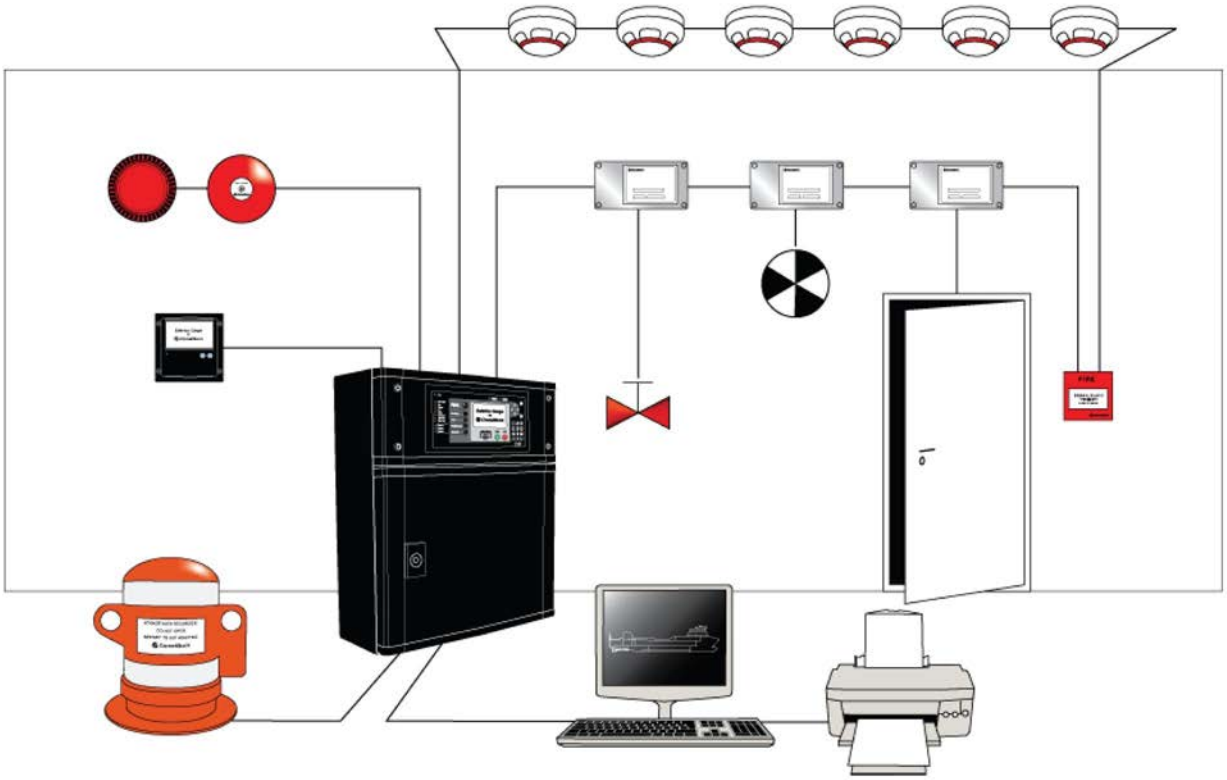

G002909

1.2 Approvals

0845

1.3 Symbols used in the manual

DANGER!
Risk of serious or fatal injury to the user, and/or severe damage to the product, if the instructions are not followed.

WARNING!
Risk of personal injury and/or damage to the product if the instructions are not followed.

CAUTION!
Risk of minor or moderate personal injury. Risk of equipment damage, loss of data, extra work, or unexpected results, if the instructions are not followed.

NOTE!
Note symbols alert you to important facts and conditions.

Hint!
Tip symbols direct you to specific instructions, such as where to find additional information and tell you how to perform a certain operation in an easier way.

2 Fire Detection System

2.1 System Description

This Fire detection system is a state-of-the-art, analogue-addressable, fire-detection system designed to meet marine, industrial and transport requirements. Special care is given to ergonomics and user-friendliness with its logical and intuitive operator panel.

2.2 System Block Diagram

The following figure shows a typical system and its connected components, see Definitions of Terms, page 42 in the Appendix for explanation of terms and abbreviations.

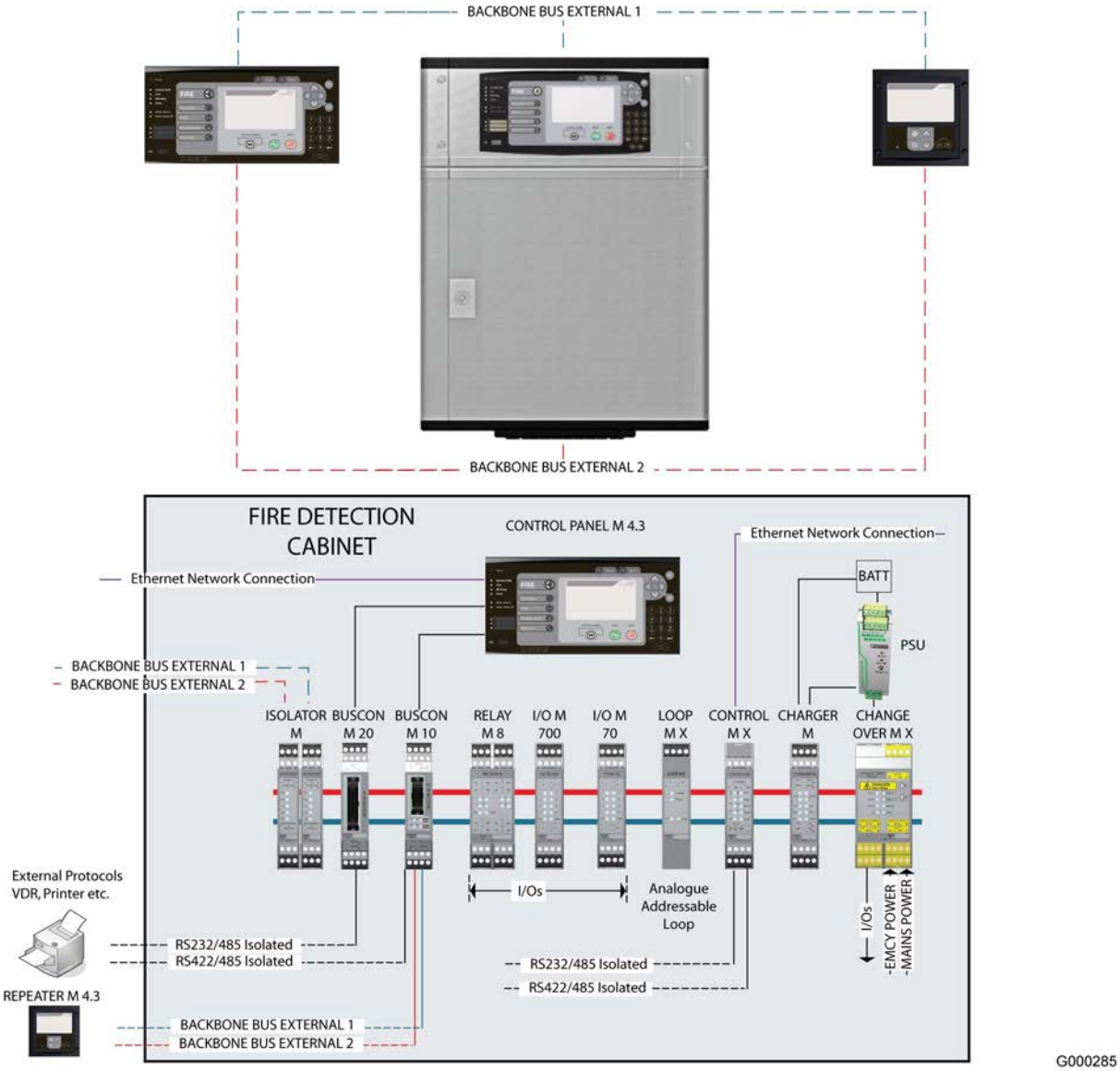

3 Control Panels

3.1 Control Panel M 4.3

3.1.1 General

This menu-operated system monitors and controls all system functionality. The control panel's clear graphical display makes it easy to use.

3.1.2 Description of Keys and Indicators

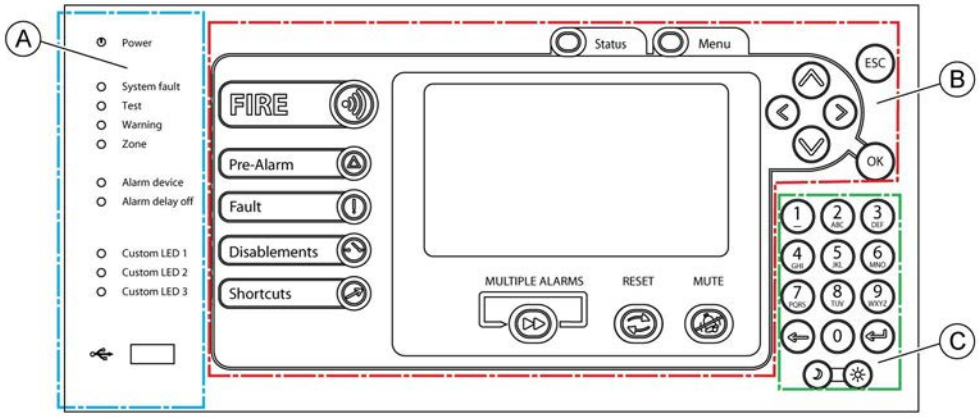

!

As shown in the figure above, the control panel is divided into three sections:

A = System Indicators
B = Operational Controls
C = Numerical Keypad

Part A: System Indicators

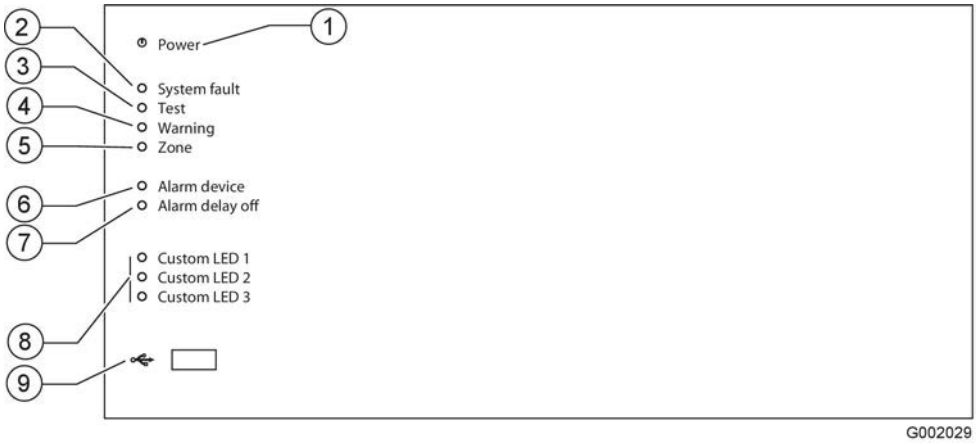

" # ! !

The System Indicators section is comprised of the following indicators:

1.

Steady green light	Power supply to the control panel is OK.

2.

Flashing yellow light	Main process fault. A serious system fault in the system.

3.

Steady yellow light	At least one zone is manually set in test mode.

4.

Steady yellow light	At least one warning indication exists.

5.

Steady yellow light	At least one zone or a fire detector is disabled.
Flashing yellow light	At least one zone or a fire detector is in fault condition. (Priority over disablement indication.)

6.

Steady yellow light	At least one alarm device output (e.g. a bell) is disabled.
Flashing yellow light	At least one alarm device output is in fault condition.

7.

Steady yellow light	The alarm delay function is disabled.

8.

Colour and pattern of Custom LED indication is depending on system configuration.

9.

USB connection for flash memories to load or save a configuration file.

Part B: Operational Controls

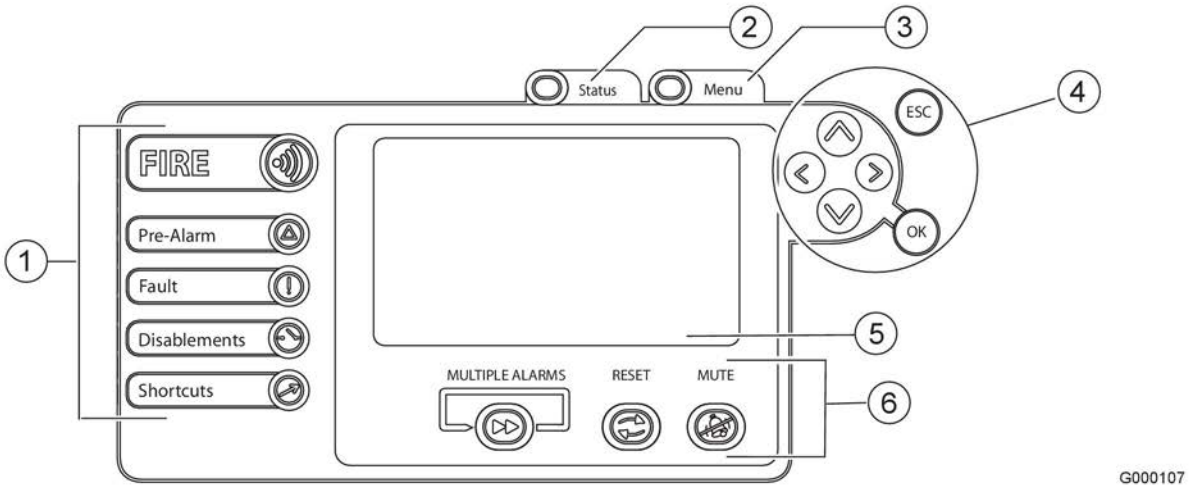

$ # ! !

1.

The Fire alarm button indicates existance of a fire alarm and gives direct access to the Fire alarm list. Indications:

Flashing red light	An un-muted fire alarm in the system.
Steady red light	All fire alarms are muted.

The Pre-Alarm button indicates existance of a pre-alarm and gives direct access to the Pre-Alarm list. Indications:

Flashing orange light	An un-muted pre-alarm in the system.
Steady orange light	All pre-alarms are muted.

The Fault button indicates existance of a fault and gives direct access to the Fault alarm list. Indications:

Flashing yellow light	An un-muted fault in the system.
Steady yellow light	All faults are muted.

! "

The Disablements button indicates existance of a disablement and activates the Disablements menu. Indications:

Steady yellow light	At least one disabled function in the system.

#

The Shortcut button activates the customer specific shortcut list. Indications:

Steady orange light	The alternatives in the shortcut list and the corresponding indicators (Shortcut 1, Shortcut 2 and Shortcut 3) are programmed via the definition program.

2. **Status**
   This button gives direct access to the System status summary list with Alarms (Fire and Pre-Alarms), Maintenance (Faults and Warnings) and Disablements (Active and Periodic).
   Shortcuts are:
   1. Upload the system log to USB Memory stick.
   2. Go to the maintenance menu.

3. **Menu**
   This button gives direct access to the main menu and all system functions.

4. **Navigation and Command Keys**
   The arrow keys are used to navigate menus, select different menu alternatives, and show details for list items.

Go to the previous item in the list or menu.

Go to previous menu.

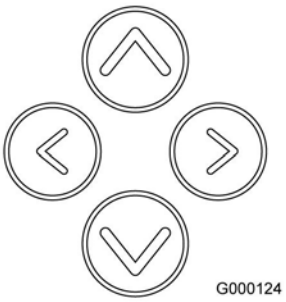

Selects the chosen menu alternative.

Go to the next item in the list or menu.

ESC
The Escape button is used to go to the top menu screen.

OK
This button is used to select a menu alternative or to accept a function. The OK button is also in some cases used to show details for a selected list entry.

5. **Display**
   The display has a backlited 4.3" graphical screen, 480×272, 16-bit colour screen.

6. **Alarm buttons**

Multiple alarms
Press this button to scroll through the different alarms. The list always returns to the first fire alarm after 30 seconds of inactivity.

Reset
This green button is used to reset a selected alarm, fault or disablement.

Mute
This red button is used to mute (acknowledge) and silence alarms.

Part C: Numerical Keypad

% # ! !

1. $ * (
   % + ,
   The numerical keypad is used to enter numerical values. Keys 1–9 are also used as shortcuts when navigating in the menus.

   &
   This button is used to erase characters from the text display.

   &
   This button is used to select a menu alternative or to accept a function. The Enter button is also used to show details for a selected list entry.

   !
   Increase the brightness/contrast level for the indicators and display on the panel.

   $ #
   Decrease the brightness/contrast level for the indicators and display on the panel.

3.1.3 Menu System

The Fire detection system is menu-operated. All system functions are available from the different menus. The fire alarm system is normally displaying a greeting screen. From the greeting screen press to enter the menu system.

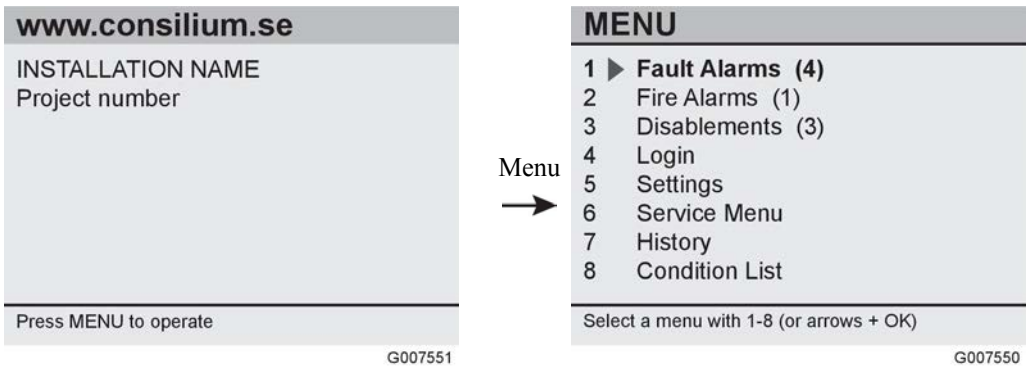

How to navigate the menu system

- Navigate in the menu alternatives with the ⌃ and ⌄ arrow keys. It is also possible to choose a menu alternative by entering the menu number.
- Select a menu alternative with the > arrow key or the OK key.
- Use the < arrow key to go back to the previous menu.

In the lower part of the display the different options available for each individual menu are shown.

The numerical keypad is used to enter information, e.g., zone and detector number.

The ⇦ button erases the last character.

Table 1. Top menu alternatives

1 Fault alarms	The menu from which fault- and warning messages are listed and handled.
2 Fire alarms	Fire alarms and pre-alarms are displayed and managed from this menu. Muted alarm devices may be reactivated here.
3 Disablements	Disablemented parts of the Fire detection system are added, removed, or listed from this menu. (For instructions, see Disablements, page 26.)
4 Login	Log in from this menu by entering a personal access code. For further details see section Login, page 22.
5 Settings	Use this menu to adjust system parameters, such as the dimmer level, date, time and alarm delay time. It is also possible to make a lamp test for the control panel under “Test display”.
6 Service menu	Use this menu to list and view information about the system and its components. It is also possible to make disablements of the listed units. The Service menu is described in more detail in the separate Service and Maintenance manual. Access level 2 for basic functions, but access level 4 is needed to perform advanced service options.
7 History	Use this menu to view previous events in the Fire detection system.
8 Condition list	Use this menu to create lists with contaminated detectors in satisfactory or poor condition.

1 Fault Alarms Menu

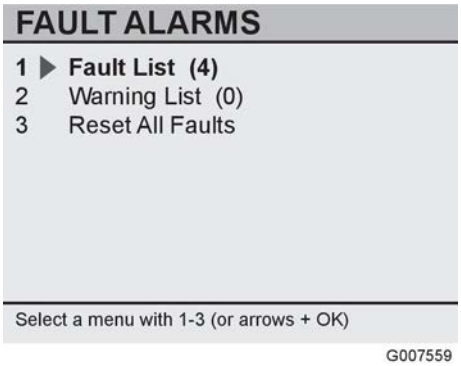

#

&

Alternatives	Description
1 Fault List	Shows all present fault indications.
2 Warning List	Shows all present warning messages.
3 Reset All Faults	The system will attempt to reset all present fault alarms in the Fault List (1.1).

2 Fire Alarms Menu

#

&

Alternatives	Description
1 Fire List	Shows all present Fire Alarms.
2 Pre-Alarm List	Shows all present Pre-Alarms.
3 Resound (restart bells)	If the alarm devices have been silenced by pressing Mute button , this function will restart them (if the fire alarm has not been reset).
4 Reset All Fire Alarms	The system will attempt to reset all Fire Alarms in the Fire List.

3 Disablements menu

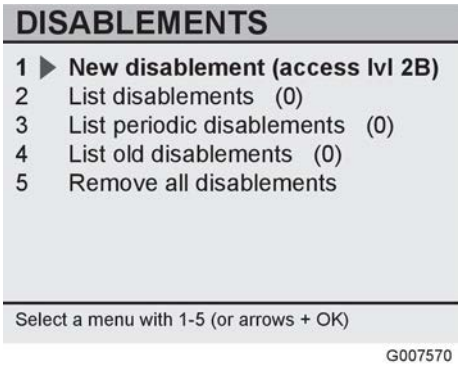

" &

Alternatives	Description
1 New disablements	Adds new disablements. New Disablements (access level 2B)
2 List disablements	Shows all active disablements in the system. A periodic disablement that is not active will not be shown in this list, but in the list periodic disablements (mentioned below). The reconnection of a disabled unit is made from this list. See section Reconnecting Disabled Items, page 30 for more details.
3 List periodic disablements	Shows all periodic disablements in the system. The removal of periodic disablements is made from this list.
4 List old disablements	This list displays the 150 previously removed disablements and allows these older disablements to be reactivated. **Hint!** This function is very useful if the same disablement is frequently needed during irregular time periods. Just mark the appropriate old disablement in the list and press 0 to reactivate it.
5 Remove all disablements	Removes all active disablements shown in the Disablement list. **DANGER!** Periodic disablements are not permanently removed. Only the periodic disablement's active period is removed.

New disablement sub-menu

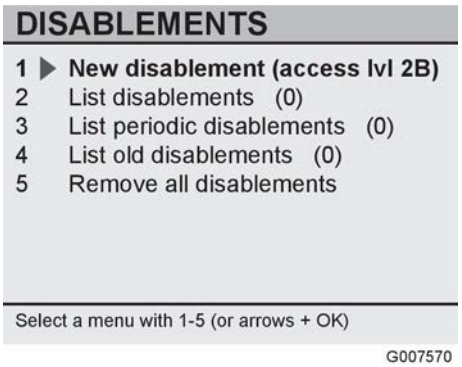

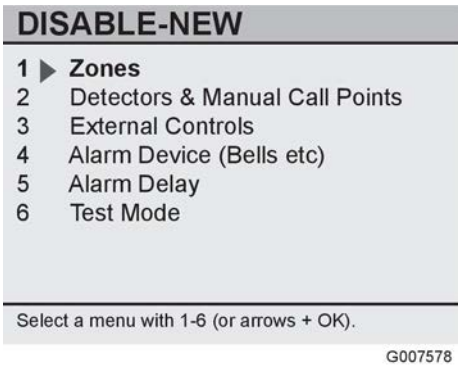

Table 5. New disablement menu alternatives

1 Zones	Disable entire zones for a specified time period or permanent.
2 Detectors & Manual Call Points	Disable individual detectors or manual call points for a specified time period or permanent. Note! Only for analogue addressable systems.
3 External Control	Deactivate & - or . . See list External Control Disablements, page 13 for more information.
4 Alarm Device (Bells etc.)	Disables the outputs for alarm devices, such as audible (e.g., bells) and optical alarm devices.
5 Alarm Delay	Disables the alarm delay function. Alarm delay is a programmable time delay between when a fire is detected and until the alarm device outputs are activated. The alarm delay function is normally enabled. See Disabling Alarm Delay, page 29 for more information.
6 Test Mode	Set a zone into test mode. See section Test Mode Overview, page 33 for more details.

2 $

- 1 External Controls
  Disables outputs (all or individual categories) to external controls. This means that an alarm condition will not cause activation of the selected category.
  - All groups (Doors, Fire, etc.)
    Category including all external controls (doors, fire, fault, ventilation and indication).
  - Doors
    Disable external door controls in the system.
  - Fire
    Disable external fire controls in the system.
  - Fault
    Disable external fault controls in the system.
  - Ventilation
    Disable external ventilation controls in the system.
  - Indication
    Disable external indication controls in the system.
- 2 Alarm Transfer
  Disables the supervised alarm transfer output, which is normally used in on-shore installations to alert the fire brigade in case of a fire alarm. Select System or Central to disable.

See also section Disablements, page 26 for more information about the Disablements.

4 Login Menu

See Login, page 22 for more information about the Login menu alternatives.

5 Settings Menu

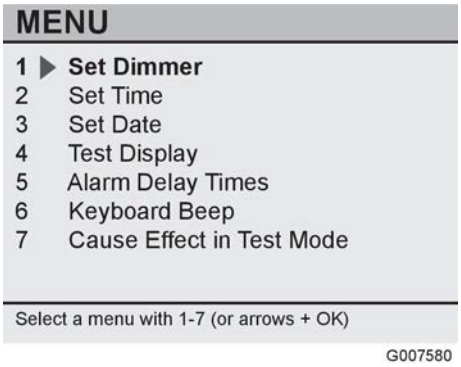

% &

Alternatives	Description
1 Set Dimmer	Use this menu to adjust the contrast level (1–9) for the display and indications on the control panel.
2 Set Time	Use this menu to set the system time. It is possible to synchronize the system clock with the ship's central time.
3 Set Date	Use this menu to set the system date. **NOTE!** Dates before year 2000 are not accepted by the Fire detection system.
4 Test Display	Use this menu to activate a lamp test that verifies correct function of the display and all indications on the control panel.
5 Alarm Delay Times (access level 3)	Use this menu to adjust the programmable alarm delay times if no time is set in the configuration program. Time 1 is adjustable between 1 or 2 minutes. Time 2 (reset) is only used for on-shore installations. See section Disabling Alarm Delay, page 29 for more information.
6 Keyboard Beep	Use this menu to turn the keyboard beep ON or OFF.
7 Cause Effect in Test Mode	Use this menu to turn the Cause Effect programming ON or OFF during test mode. If set to ON, the outputs are activated as normal during test mode.

6 Service Menu

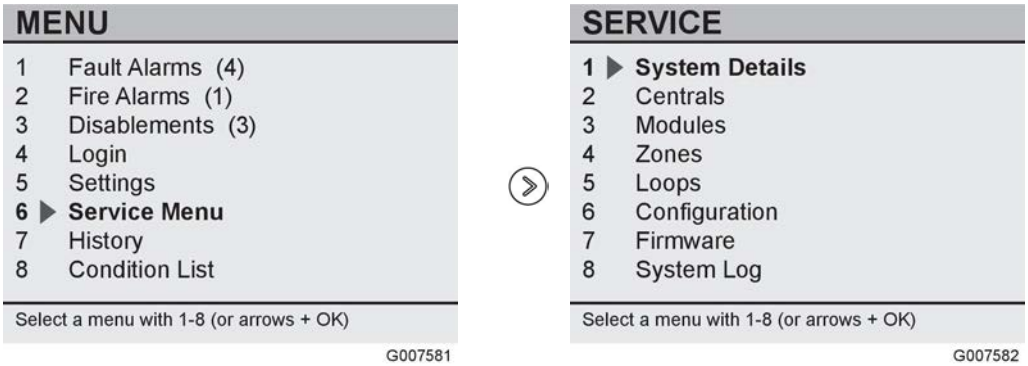

Hint!
The Service menu is described in more detail in the separate Service and Maintenance manual.

(& &

Alternatives	Description
1 System Details	This menu lists the installed system's information, such as name and reference number (if defined). It also lists when the system was last configured and by which program.
2 Centrals	Use this menu to list information about the installed centrals and the modules in each central.
3 Modules	Use this menu to list information about the installed system modules. It is possible to display all details about the modules, such as installed detector loops, installed program versions, input/output status. It is also possible to print information.
4 Zones	This menu shows a list of all zones configured in the system. It is possible to list all loop units in a zone if the zone consists of addressable loop units, disable zones or loop units, and set a single fire detector in alarm condition. Installation Mode can be activated for loops and zones containing addressable loop units. Loop units affected by Installation Mode will stop reporting faults of type ‘present not configured’, ‘configured not present’ and ‘no answer’.
5 Loops	This menu shows a list of all physical loops installed in an analogue addressable system. A loop can consist of conventional or addressable fire alarm detectors and other loop units. It is possible to add and to disable entire loops. Use Scan Loop to scan the loop for new loop units. Installation Mode can be activated. Loop units affected by Installation Mode will stop reporting faults of type ‘present not configured’, ‘configured not present’ and ‘no answer’.
6 Configuration	This menu is used to configure the system as further explained in Configuration sub-menu, page 16.
7 Firmware	Use this menu to download firmware to modules, load or backup service pack, and to start or stop an automatic update.

Alternatives	Description
8 System log	Once the System Log is copied to the USB Memory, it can be sent to an authorized service organization for further technical assistance. See section Service Menu, page 31 for further information and instructions.

Configuration sub-menu

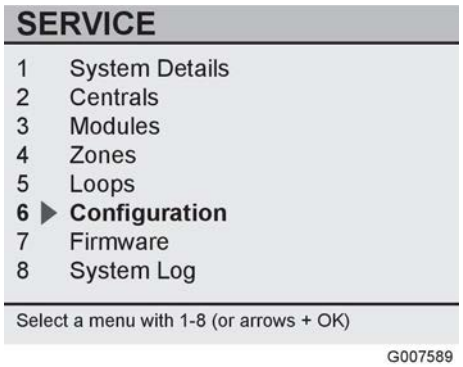

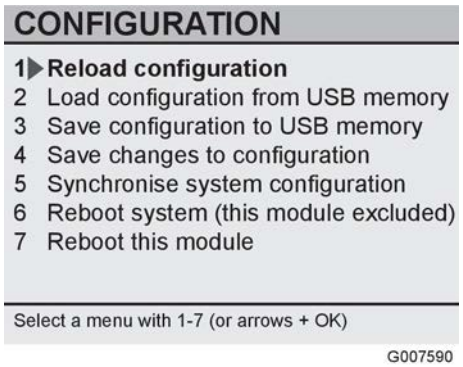

Hint!
The Configuration menu is described in more detail in the separate Service and Maintenance manual.

Alternatives	Description
1 Reload configuration	Reload the configuration when a new updated configuration file has been downloaded to the system.
2 Load configuration from USB Memory	Download a new configuration file from a suitable USB Memory stick.
3 Save configuration to USB Memory	Copy the existing configuration file to a suitable USB Memory stick.
4 Save changes to configuration	**CAUTION!** It is highly recommended to backup the Configuration File before continuing. Use this command to save all changes made from the control panel to the system configuration. **NOTE!** The changes are not permanently saved in the configuration file until this command is performed.
5 Synchronize system configuration	**CAUTION!** It is highly recommended to backup the Configuration File before continuing. Use this command to synchronise the Configuration Files in the system.
6 Reboot system (this module excluded)	The operation will reboot the system with this Control Module excluded.
7 Reboot this module	The operation will reboot this Control Module only.

7 History Menu

) * &

Alternatives	Description
1 Fire History List	Shows a chronological list of the last 200 fire alarms.
2 Fault History List	Shows a chronological list of the last 200 fault alarms.
3 Disable History List	Shows a chronological list of the last 200 disablements.
4 Common History List	Shows a common chronological list of the last 1000 pre-alarms, fire alarms, fault alarms, disablements, warnings, and I/Os.

8 Condition List Menu

NOTE!
Only for analogue addressable systems.

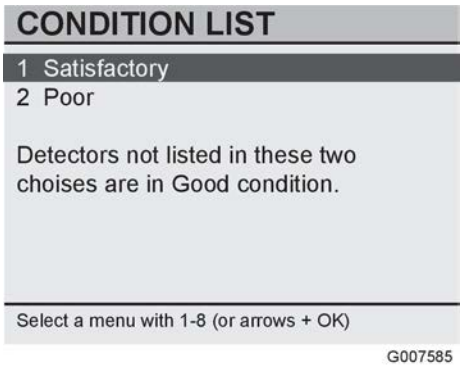

+ &

Alternatives	Description
1 Satisfactory	This list shows detectors that still are in satisfactory condition and fully functional. However, the environment has started to degenerate the detectors and they are no longer in good condition.
2 Poor	This list shows detectors that have gone beyond satisfactory condition and entered poor condition, but are still fully functional. When it is time to replace a detector the fault "130 dirty sensor" and the detector address will appear in the fault list.

3.2 Repeater M 4.3

3.2.1 General

The repeater panel is used to monitor functions in the Fire detection system. It is possible to view and list:

- Fire alarms
- Faults
- Disablements

3.2.2 Description of Keys and Indicators

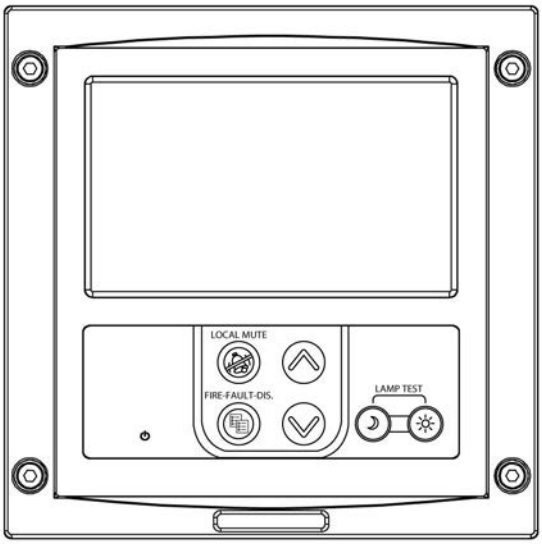

G002133

(!

Repeater panel

- ⏻

  Green steady light indicates that the power supply to the repeater panel is OK.

- /

  Silence the local buzzer alarm.

- ! 0

  Press the button to select the lists: Fire Alarm, Fault Alarm and Disablements.

- $ * 1 (

  Scroll to previous item in the selected list.

- $ * 1 -

  Scroll to next item in the selected list.

- **Night mode**

  Decrease the brightness/contrast level for the indicators and display on the panel.

- **Day mode**

  Increase the brightness/contrast level for the indicators and display on the panel.

- **Lamp test**

  When you press the buttons for Day and Night mode at the same time, all the repeater panel indicators and the display are lit – if not, they are not working correctly.

4 Operations

4.1 Access Levels

To prevent un-authorized operation of the system access levels protect the different functions of the Fire detection system.

The user has to log in to the system before any vital operations can be performed. Without access to an authorization code the user can only view fire and fault alarms and mute the local buzzer.

Access level 2 is the default level. The system automatically returns to access level 2 after 30 minutes of inactivity.

Description of Access levels

There are different access levels as shown in the following table:

, &

Access level	Procedure to enter level	User	Permissions
2	' (None	Personnel trained and authorized to operate the system in case of fire or maintenance.	For viewing of fire or fault alarms: • Fire alarms have priority over fault alarms. • Possibility to mute local buzzer. • Access to the menu system • List status • Reset and muting of alarms
2B	' (Enter access code for level 2B via menu/login.	Personnel trained and authorized to operate the system in case of fire or maintenance.	Same permissions as level 2B, plus this additional permission: • Make disablements
3	Enter access code for level 3 via menu/login.	Personnel trained and authorized to make changes to the configured system.	Same permissions as level 2B, plus these additional permissions: • Possibility to make changes to the configured system
4	Enter access code for level 4 via menu/login.	Only authorized service personnel trained by an authorized service organization.	All functions available, including advanced service options.

Custom Specific Restrictions

NOTE!
Permissions on the different access levels can in some cases vary depending on programmed custom specific restrictions.

A Control Panel M 4.3 could be programmed to view events in the system with restricted rights to operate functions. For example a fire alarm is shown, but mute and reset are not allowed.

4.2 Login

Each user is assigned to a specific access level.

The predefined users are assigned the following default access codes:

Level 2B	2222
Level 3	3333

To log in to the system:

1	Go to - . " / and select user.	
2	Enter the four-digit access code for the user.	The system will acknowledge if the correct code is entered.

4.3 Pre-Alarm

The pre-alarm function gives an early alarm to fire conditions (e.g., a smouldering fire). The indication “Pre-Alarm” is lit on the control panel.

The pre-alarms priority level is lower than the ordinary fire alarm level.

NOTE!
Fire alarms take precedence over pre-alarms.

The pre-alarm is also added to the Pre-Alarm List found under: - .
. 0 1 . /

It is only possible to mute a pre-alarm, not reset. A pre-alarm will remain in the Pre-Alarm List until the fire condition is under or over (fire alarm) the level for pre-alarm.

The pre-alarm usually does not activate any alarm devices or external outputs.

4.4 Fire Alarm

4.4.1 Information Displayed when “Fire” is Flashing

The following sections describes the information displayed during a fire alarm, how to mute and reset an alarm, and the different types of alarms.

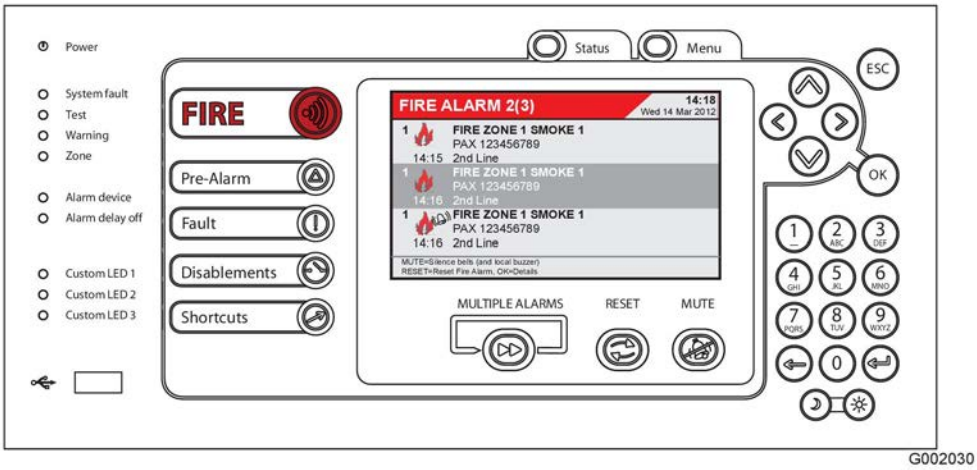

Figure 8. A fire alarm is detected in the system.

The following information is displayed in the Control Panel:

- Number of alarm(s)
- First, last and current list entry
- Zone in alarm
- Type of unit in alarm
- Address number of unit in alarm (only for addressable loop)
- Supplementary text (if defined in system configuration)

Press OK for more details:

- Time of alarm
- Date of alarm
- Supplementary text about location of the detector (if defined in system configuration)

, , '

The Mute button has different functions depending on the current access level.

1	Press	Silences the internal buzzer and all external alarm devices*, and mutes the fire alarm indication. The fire indicator stops flashing, but remains lit until the Fire Alarm is reset.
2	Press OK for more details.	

* Programmable function of external devices, programmed by system Cause/Effect.

4.4.3 Reset a Fire Alarm

1	Press to reset the current Fire Alarm.	**NOTE!** Alarms cannot be reset as long as the device remains in alarm condition. In some cases when reset is not possible a dialog box appears to explain why.

4.4.4 Several Alarms

If there is more than one fire alarm in the system, the indication is activated. The first and last fire alarms are always displayed in the control panel.

1	Scroll through the different fire alarms with the button or the / arrow keys.	
2	Mute and reset as above.	For detailed instructions, see Mute a Fire Alarm, page 23 and Reset a Fire Alarm, page 24.

4.4.5 Type of Fire Alarms from Conventional Zones

The Fire detection system will display whether is was a single detector or a manual call point/multiple detectors that generated the fire alarm. If two or more detectors are activated in the same zone, the fire alarm will be presented as a manual call point/multiple detectors.

4.5 Fault Alarm

4.5.1 Information Displayed when “Fault” is Flashing

The following sections describe the information that is displayed when a fault occurs, and how to mute and reset a fault.

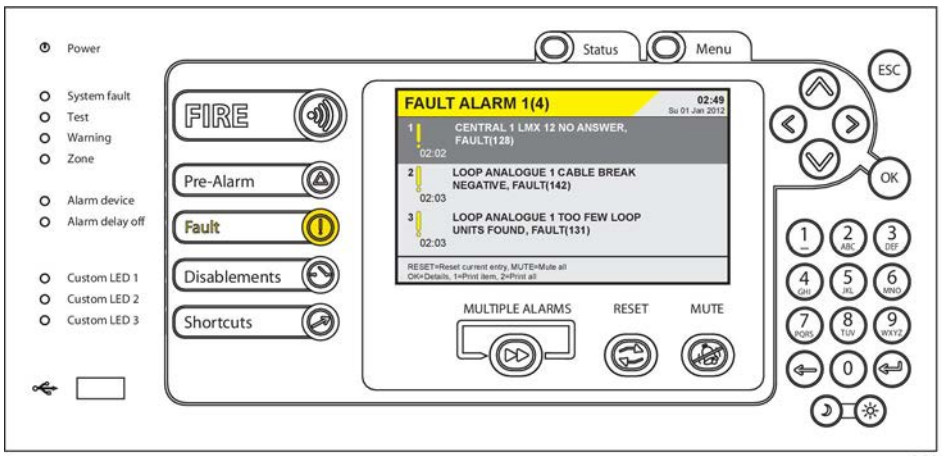

+ !

The following information is displayed in the Control Panel:

- Number of detected fault(s)
- Type of fault
- Identification of the faulty unit
- Supplementary text for the faulty unit (if defined in system configuration)

Press OK for more details:

- Time when fault occurred
- Date when fault occurred
- Supplementary text about location of fault (if defined in system configuration)

4.5.2 Mute a Fault

1	Press to silence internal buzzer and mute all faults in the list.
2	Press OK for more details.

4.5.3 Reset a Fault

1	Press to reset the current fault alarm.	**NOTE!** If the cause of the fault alarm remains, the alarm cannot be reset. Check the fault code in the Fault Code List, page 37 to solve the problem.

4.5.4 Reset a Fault from the Fault List

All faults in the system are shown in the fault list.

1	Go to the fault list under: - . . /	
2	Choose the fault in the fault list and then press to reset the fault alarm.	**NOTE!** If the cause of the fault alarm remains, the alarm cannot be reset. Check the problem, solve it, and reset the fault.

4.5.5 Reset All Faults

1	Go to: - . . 2	
2	Press OK	The system will make an attempt to reset all faults.

4.5.6 Fault Messages

The control panel displays a fault with information about where in the system the fault occurred and a short description of that fault.

See Fault Code List, page 37 for a list of all fault messages.

4.6 Disablements

4.6.1 About Disablements

It is possible to disable different devices attached to the system, such as zones, detectors, manual call points, alarm devices, external control devices, and loops.

The available disablements (permanent, timer, clock and periodic) are described in the next chapter.

All disablements are presented in a disablement list. The yellow Disablements indicator is lit on the control panel when at least one disablement is activated in the system and remains lit until all disablements are reconnected.

To perform a disablement you must enter access level 2B or higher.

DANGER!
When a fire detector or zone is disabled, the Fire detection system will not be able to detect any occurring fire in that area. It is therefore important that disablements are minimized in terms of quantity of disabled units and duration of time.

Hint!
If the dual detectors heat/smoke are installed, it is possible to disable only the smoke detection part of the detector and keep the heat detecting part active or vice versa.

4.6.2 Available Types of Disablements

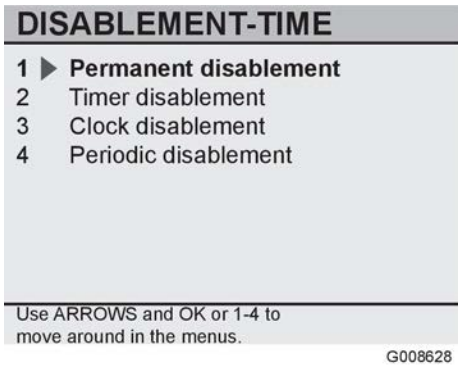

, # !

There are four different types of disablements available.

Permanent disablement

The device is permanently disabled until it is manually enabled.

NOTE!
It is possible to limit the disablement time by defining a maximum disablement time in the configuration program.

Timer disablement

Disablement is instantaneous and lasts for the time period entered (hh:mm). Maximum disablement time is 23 hours 59 minutes. Maximum disablement time can be limited depending on rules and regulations.

Clock disablement

Enter a reconnection time. Disablement is instantaneous and the reconnection will take place next time the entered time occurs. The maximum disablement time is 23 hours 59 minutes.

Take the time entered under consideration on ships going through different time zones (if the system time is not synchronized with the ship's central time).

Periodic disablement

A disablement for a certain time period during certain days of the week. Example: Disable zone 1 each Tuesday and Friday between 7.00 - 17.00.

Take the time entered under consideration if the system is travelling through different time zones (if the system time is not synchronized with a central time).

4.6.3 Acknowledgement of a New Disablement

Once a new disablement is correctly entered, an acknowledgement is presented on the control panel. The Disablements button indicates with steady yellow light, use it to activate the Disablements list.

The new disablement is also added in the disablements list under: - .
.

4.6.4 Disabling Zones

(Access level 2B or higher)

Disabling a Conventional Zone

1	Select - . . ' . 3
2	Choose Zone (Zone number)
3	Choose disablement type (Permanent, Timer, Clock or Periodic)
4	Enter time (if Timer, Clock or Periodic was chosen in the previous step)

Disabling an Addressable Zone

1	Select - . . ' . 3
2	Choose Zone (Zone number)
3	Choose detector type (Smoke detectors, All detectors, Heat detectors, Flame detectors, or Manual Call Points)
4	Choose disablement type (Permanent, Timer, Clock or Periodic)
5	Enter time (if Timer, Clock or Periodic was chosen in the previous step)

4.6.5 Disabling Addressable Detectors & Manual Call Points

(Access level 2B or higher)

NOTE!
Disabling of individual detectors is only possible on addressable loops.

1	Select - . . ' . 4 - 0
2	Choose zone (Zone number)
3	Choose detector type (Smoke detectors, All detectors, Heat detectors, Flame detectors, or Manual Call Points)
4	Choose detector address or interval (Address number(s))
5	Choose disablement type (Permanent, Timer, Clock, or Periodic)
6	Enter time (if Timer, Clock, or Periodic was chosen in the previous step)

Hint!
It is also possible to disable detectors from the Fire List.

4.6.6 Disabling Alarm Devices

(Access level 2B or higher)

Examples of alarm devices are bells, buzzers and flash lights.

Disablements of alarm devices:

1	Select - . . ' . " & 5 6 7

4.6.7 Old Disablements

Use this menu to reactivate previously performed disablements.

NOTE!
Only permanent disablements can be reactivated.

1	Select - . . " 8

2	Mark the appropriate old disablement in the list and and press “0” to reactivate the disablement (again).

4.6.8 Disabling Alarm Delay

An alarm delay function will delay the activation of alarm devices in case of a fire alarm. The delay time is programmable and as default normally set to two minutes.

The alarm delay may be disabled which means that there will be no delay between the fire alarm and the activation of the alarm device outputs.

Hint!
When disabled the alarm devices will be activated immediately in case of a fire alarm.

1	Select - . . ' . $	
2	Select central.	
3	Select type of delay (Permanent, Timer, Clock or Periodic)	See Available Types of Disablements , page 26 for explanation.

Set delay time (Access level 3 or higher):

NOTE!
Delay time is only possible to set if no time is set in the configuration program..

Alarm Delay Time 2 (reset) is only used for on-shore installations.

1	Select - . $. $ # . # . 5	**NOTE!** Max allowed alarm delay time is 2 minutes acc. to SOLAS.

4.6.9 Disabling External Control Groups

(Access level 2B or higher)

Examples of external control groups are fans or outputs controlling fire doors.

1	Select - . . ' . 9 9	.
2	Select an output category to be disabled.	All groups = all categories of doors, ventilation, etc.

3	Select System or Central. Press OK.	**NOTE!** It is possible to disable all the external controls in the entire system or in individual centrals.
4	Press OK	

4.6.10 Disabling an Alarm Transfer Output

(Access level 2B or higher)

Disablements of the alarm transfer (fire brigade) output, used in industrial installations to alert the fire brigade in case of a fire alarm:

1	Select - . . ' . 9 . #

4.7 Reconnecting

4.7.1 Reconnecting Disabled Items

All disablements in the system are presented in the disablement list. Any enablement is made from this list.

1	Select - . .
2	Choose the disablement you want to cancel.
3	Press

4.7.2 Reconnecting Periodic Disablements

Periodic disablements in the system are presented in the periodic disablement list.

Reconnecting is made from this list:

1	Select - . . 0
2	Choose the periodic disblement you want to cancel.
3	Press

4.7.3 Remove All Disablements

This menu removes active disablements presented in the Disablement list.

1	Select - . . $ 2	&

2	Confirm with OK to remove (reset) all active disablements in the system.	**NOTE!** Periodic disablements are not permanently removed. Only the periodic disablement's active period is removed.

4.8 Service Menu

4.8.1 About the Service Menu

(Access level 2 for basic functions, but access level 4 is needed to perform advanced service options.)

The Service menu is used for configuring the system in the commissioning phase, as well as for troubleshooting and making small updates when the system is in operation. The menu has functions for loading and saving information from/to a suitable USB Memory.

The Service menu screen displays a list of the 8 service menu alternatives, as shown in the figure below.

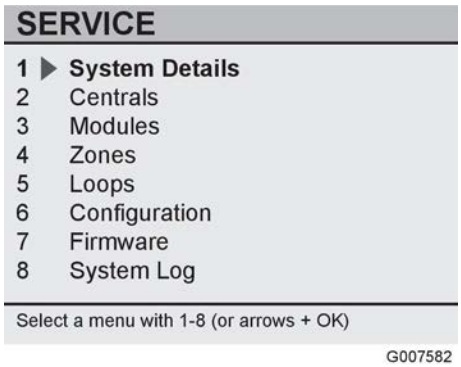

&

Please refer to the Service and Maintenance manual for detailed information about the Service menu.

4.8.2 Copy the System Log to a USB Memory Stick

To control the information saved in the system log download it from the fire alarm central and read the file in a text editor on a PC.

Hint!
When requesting assistance on technical issues please send the system log file to your local retailer.

The system log file can be downloaded by following the instructions below and using an approved USB memory stick (available from an authorized dealer).

1	Connect the USB memory stick to the USB port on the rear of the control panel.	

2	Choose *Menu » 6 Service Menu » 8 System Log » Save the syslog File to USB Memory?*.	
3	Press ' % to copy the system log to the USB memory stick.	Authorization code level 3 is needed to be able to perform the download.
4	The system will now save the system log file on the USB memory stick. Press & (when the download is completed.	$ % Do not remove the USB memory stick until the download is finished.
5	Disconnect the USB memory stick and copy the system log file to a PC.	File name example: YYYY-MM-DD_xxxxxx_syslog.txt

5 Testing

5.1 About Testing

For additional information about testing, please refer to the Service and Maintenance Manual.

5.2 Test Mode Overview

NOTE!
This section is only applicable for addressable units.

The system has a special test mode function which makes the testing easier.

When a zone is in test mode:

- External alarm devices and controls are by default not activated in case of a fire.
  Hint!
  This functionality can be turned off.
- The alarm level is lowered to give a quick response to detector test equipment.
- LED indicators on loop units begin to blink.
- Each tested loop unit will indicate activation by its LED indicator.
- If a printer is connected to the system, alarms will automatically be printed as a result of the tested units.
- The units in alarm are automatically reset if the heat or smoke concentration is under the alarm level, or if the manual call point is reset.

NOTE!
The system handles fire alarms from zones not in test mode in the usual way.
The tested zone will automatically return to normal operation after two hours.

5.3 Testing a Fire-detecting Zone

Consilium recommends that the fire detection system is tested at least once a year to assure correct function.

CAUTION!
During system start-up Loop modules performs a 15 minutes calibration period for pollution level of smoke. No tests should be done during this period.

1	Put the zone into test mode under: - . . ' # - .	. %

2	Select a zone and confirm by pressing the OK button.	The Disablements, Test, and Zone/Unit indicators light to confirm that they are in test mode.

It is now safe to test each detector and manual call point in this fire zone during the next two hours.

All alarms are listed under: *Menu » 7 History » 1 Fire History List*.

Use appropriate test equipment.
See section Recommended Test Equipment, page 34.

4 , " >

Table 11. List of recommended test equipment for Fire detecting systems

+	
Testifire	Multi-stimulus Detector Tester
Salwico Solo 330	Smoke Detector Tester
Salwico SOLO 461	Heat Detector Tester
Salwico VD T-1	Heat Detector tester
Salwico IR Test lamp	Flame Detector Tester
Salwico UV test lamp	UV Flame detector test lamp
W8066	UV test lamp

For detailed information, please refer to the data sheets for the products.

4 4 "

After testing is completed, return the tested zone to its normal condition.
Before exiting test mode, make sure there are no detectors or manual call points in alarm condition.
The tested zone automatically returns to normal operation after two hours.

To reset test mode:

1	The zones in test mode are listed in the Disablement List, found under: *Menu » 3 Disablements » 2 List disablements*.
2	Choose the zone in the disablement list and then press .

5.6 Test the Control Panel Display

With the function Test display it is possible to test:

- The display
- All indications on the control panel

1	To test the control panel display, use: - . $. " # .

6 Appendix

6.1 Fault Code List

Listed in the table below are all fault codes, their causes, and how an operator with knowledge of the system can solve the problem.

!

Fault Code		Cause	Remedy
128	$' $ &)	Explanation: Lost communication. The system has recognized a unit but lost contact.	
		Wrong type of loop unit	Switch to the correct loop unit
		Two loop units have the same address (a secondary fault appears)	Check address of the units. Rescan the loop.
		Defect unit	Replace the unit. Refer to the Installation manual or Service & Maintenance manual:
		Cable break or short circuit in a loop (a secondary fault appears)	Locate the cable break or short circuit. Refer to the Installation manual or Service & Maintenance manual:
129	&$ ') /	The detector has a faulty sensor element	Replace the unit. Refer to the Installation manual or Service & Maintenance manual:
		The smoke detector is exposed to strong airflow	Protect the detector from the airflow or consider repositioning the detector.
130	!2) 3 &$ ')	The detector has a dirty (polluted) sensor element	Replace the detector. Refer to the Installation manual or Service & Maintenance manual:
131	'' & /'' $2 ' $!	Fewer loop units found than configured. Loop units not correctly installed or addressed.	Check the loop configuration or reconfigure the system
			Address the unit correctly. Refer to the Installation manual or Service & Maintenance manual:
		Missing answer from a unit	Check address (possible double address). Otherwise replace the unit. Refer to the Installation manual or Service & Maintenance manual:
132	'' $3 /'' $2 ' $!	More loop units found than configured	Check the specification or reconfigure the system. Refer to the Installation manual or Service & Maintenance manual:
		Loop units not correctly installed	Address the unit correctly. Refer to the Installation manual or Service & Maintenance manual:
133	2$ /&)& %	There is a cable break on input 1	Check that the cable between input and end of line resistor is complete
134	2$. /&)& %	There is a cable break on input 2	Check that the cable between input and end of line resistor is complete

Fault Code		Cause	Remedy
135	& 4 . 5 6 2 /	External 24V power source missing or the local power supply unit is defective	Check the local power supply unit and consider replacing
136	& & ! % /	External load is missing	Check the cable and the external load
137	' 2 2 ' $ /	A supervised unit (for example, a door or damper) is in the wrong position	Check for obstructions
138	/ ' ' 7 ') 2) 2	A short circuit in the detector loop cable	Locate the short circuit. Refer to the Installation manual or Service & Maintenance manual:
139	/ ' ' 7 ') 2) 2	Short circuit on the A-side of a detector loop	Locate the short circuit. Refer to the Installation manual or Service & Maintenance manual:
140	/ ' ' 7 ') 2) 2	Short circuit on the B-side of a detector loop	Locate the short circuit. Refer to the Installation manual or Service & Maintenance manual:
141	/ &) & % ' 2 2 6 &	A cable break on the positive conductor has been detected	Locate the cable break. Refer to the Installation manual or Service & Maintenance manual:
142	/ &) & % $ & 8 2 6 &	A cable break on the negative conductor has been detected	Locate the cable break. Refer to the Installation manual or Service & Maintenance manual:
143	' $ 2 2 ' $ &)) ')	Explanation: The communication with a unit is deficient	
		Two units have the same address	Check the loop unit addresses. Refer to the Installation manual or Service & Maintenance manual:
		Faulty loop unit	Replace the unit. Refer to the Installation manual or Service & Maintenance manual:
		Interference from external source	Locate interference source. If not possible to solve the problem, contact an authorized service office
144	/ ' ' $ 2 3 & 7 $ 8 & !	The type of unit found in the loop is different from the original type configured	Accept the unit found or replace to original type
145	$ % $ ' $ 3 & ' / ' ' $ 2 ' $!	Explanation: The type of unit found is not recognized by the system	
		Faulty unit	Replace the unit
		Wrong type of detector has been installed	Install the correct type and restart the loop
146	2 &) %	The timer has been activated for too long	Reset the timer to zero
148	! ' / & ! !) &	Two units with the same address on a loop has been found	Change one of the addresses. Rescan or restart the loop. Refer to the Installation manual or Service & Maintenance manual:
149	7 ') 2) 2	Short circuit detected	Locate the short circuit and restore operation
150	6 / 6 & / ' & !	The valve is closed	Open the valve
151	' $ 2 8) & ! $ ') & & $	Unit is configured but not found	Verify if unit address is correct. Verify there is power to the module. Contact an authorized service office.

Fault Code		Cause	Remedy
152	) & & $ $ ' ' $ 2 8) & !	Unit present but not configured	Verify if unit address is correct. Verify there is power to the module. Contact an authorized service office.
153	7 2 8 7)) & $ ' $ / ' '	The high current has exceeded acceptable levels	Check if there are too many units connected to the loop. Refer to the Installation manual or Service & Maintenance manual:
155	&) 7 / ' 2 2 6 &	Earth fault on the positive conductor	Locate the earth fault. Refer to the Installation manual or Service & Maintenance manual:
156	&) 7 / $ & 8 2 6 &	Earth fault on the negative conductor	Locate the earth fault. Refer to the Installation manual or Service & Maintenance manual:
157	& /	A blown fuse	Replace the fuse
158	&) 3 / & & /	A battery fuse has blown or a cable to the battery is broken	Replace fuse or restore the cable
159	/ &) & %	A cable break has been detected	Restore the cable
160	/ & ' 6 &) / ' !	Too high current on the output	Check external loads
162	& &) 8 & $ 3 ' &) /	Emergency power is lost	Check the emergency power supply
163	&) 3 /	Low battery voltage detected	Charge the battery. If the fault remains, replace the battery. Refer to the Service & Maintenance manual:
164	&) 3 7) 8 &)	The battery charger is unable to charge the battery	Replace the battery charger
165	& 4 &) $ / /	External equipment is indicating a fault	Check the external equipment
166	&) 7 ! & & 2 ' $ /	The module is unable to detect earth fault	Contact an authorized service office
167	C 7 & % & &	Incorrect EPROM checksum	Contact an authorized service office
168	) &) & !	A module has restarted	If restarts happen repeatedly, contact an authorized service office
169	' ' / ' $ 8 ' ' 2 &	A module has been in state validating or configuration for too long	Contact an authorized service office
170	& 4 &) $ / / ' !	There is too high external load on a conventional zone	Check the load and reduce if possible
171	& 4 &) $ / ' &) ') &	Unexpected voltage detected in a conventional zone	Locate and remove the source
172	/ ' ' &) / 3	Low voltage on the primary 28VDC power supply to the internal system modules	Contact an authorized service office
173	/ ' ' &) / 3 .	Low voltage on the secondary 28VDC power supply to the internal system modules	Contact an authorized service office
174	/ ' 2 $ &) $ / ' &)	Too low voltage on the 3.3V/5V feeding to the internal circuit boards	Replace the module
175	/ ' ' &) / 3 ' &) 2 $ 8	Too low incoming 24VDC supply to the internal circuit boards	Contact an authorized service office

Fault Code		Cause	Remedy
176	3 & '$ 28) 2'$ /	The configuration file is corrupt	Contact an authorized service office
		An error has occurred during downloading of the configuration file	
177	/') &) &	External equipment indicates low pressure	Check the pressure on the supervised unit
178	')	Missing feedback from actuator 1	Check cables to actuator 1. If the cables are OK, change the actuator.
179	') .	Missing feedback from actuator 2	Check cables to actuator 2. If the cables are OK, change the actuator.
180	2$ ' &)	The main power supply is lost	Check the main power supply
181	2$ &)$ / /	Internal system fault	Contact an authorized service office
182	&4 &)$ / 2)&		Contact an authorized service office
183	$' $ &) 7 % '$&	Fault code generated when a module stops answering on channel 1 on the Backbone Bus	Contact an authorized service office
184	$' $ &) 7 . % '$&	Fault code generated when a module stops answering on channel 2 on the Backbone Bus	Contact an authorized service office
209	)'$8 3 &' /'' $2 ' $!	The type of loop unit found is different from the type configured	Change the loop unit and re-scan the loop
210	&9& & &))')	Fault detected in the configuration	Contact an authorized service office
212	3$ 7)'$2 2'$ 28$ /	The synchronisation signal in the backbone is corrupt	Contact an authorized service office
213	'$ 28 $' 3$ 7)'$2 &!	The configuration file's in the system are not the same everywhere	Synchronise the configuration files between all panels
		Central X Module Y settings in configuration file compared to DIP-settings are not OK.	Check configuration and DIP-settings.
214	' &) /3 /2 2 &4 &&!&!	The PSU charges with a current that exeeds the maximum allowed current for a charger module	Check the number of modules configured or check the external load
215	7)82$8))&$ &4 &&!&!	The battery is charged with more than the allowed charging current	Change the battery externally
216	2$ ' 2 /& 2))&	The firmware in a module does not comply with the modules hardware version. (Fault code generated by the faulty module.)	Contact an authorized service office
217	7287 6'/ 8&	The voltage from PSU 1 is too high. (Fault code generated by the Charger M modules.)	Adjust the voltage from the PSU 1
218	7287 6'/ 8& .	The voltage from PSU 2 is too high. (Fault code generated by the Charger M modules.)	Adjust the voltage from the PSU 2
219	& /	The fuse protecting the PSU 1 voltage input is broken. (Fault code generated by the Charger M modules.)	Contact an authorized service office

Fault Code		Cause	Remedy
220	& / .	The fuse protecting the PSU 2 voltage input is broken. (Fault code generated by the Charger M modules.)	Contact an authorized service office
221	)& &$ $' '$ 28)&!	PSU 1 is found but not configured in the configuration file. (Fault code generated by the Charger M modules.)	Check the configuration file
222	.)& &$ $' '$ 28)&!	PSU 2 is found but not configured in the configuration file. (Fault code generated by the Charger M modules.)	Check the configuration file
223	2$ &)$ /6'/ 8& /'	The voltage level from the Charger M is too low. (Fault code generated by the Charger M modules.)	Contact an authorized service office
224	2$ &)$ /6'/ 8& 7287	The voltage level from the Charger M is too high. (Fault code generated by the Charger M modules.)	Contact an authorized service office
225	4 2)& 28$ /	The XFIRE signal in the backbone is corrupt	Contact an authorized service office
226	)2)3 3 &	No traffic is detected on the Primary System Bus	Contact an authorized service office
227	& '$!)3 3 &	No traffic is detected on the Secondary System Bus	Contact an authorized service office
228	$' $ &) 3 &	The module has stopped answering on the system bus	Replace the module
229	'6&)7& &!	The battery or Charger M is too hot. (Fault code generated by the Charger M module.)	Contact an authorized service office
230	/' 6'/ 8& 7 % '$&	Too low voltage detected on the Backbone Bus Power Supply, channel A. (Fault code generated by the Charger M modules.)	Contact an authorized service office
231	/' 6'/ 8& 7 % '$&	Too low voltage detected on the Backbone Bus Power Supply, channel B. (Fault code generated by the Charger M modules.)	Contact an authorized service office
232	')) 2))&		Contact an authorized service office
233	)&/ 3'	A relay is broken or in a state that damages the relay. (The voltage over the relay coil is too high.)	Replace the module
236	)'$8 3 &' '! /& ' $!	The type of module found is different from the type configured	Change the module or the system configuration
237	72 ')3	Generated by a Control module which detected that it has an SD memory card but fail to write history log to it.	First step: Replace the SD card. Contact an authorized service office.
238	/' /	Generated by the Loop M X when the fan in an aspiration detector don’t rotate. NOTE: Critical error, can cause the detector does not alarm.	First step: Check the power supply to the aspiration detector. Contact an authorized service office.

Fault Code		Cause	Remedy
239	8 &)) ')	Generated by modules that have GA-defined function and the voltage on the bus for the GA (General Alarm) is too low (BBI). NOTE: Critical error, can cause the GA stops working.	First step: Check that Charger M puts out a monitoring voltage on the BBI. Contact an authorized service office.
255	2 / / & 8 /	Internal system error	Contact an authorized service office

6.2 Definitions of Terms

Alarm Condition	The state of the system when a fire or gas alarm is detected.
Alarm Delay	When activated the activation of Alarm Devices will be delayed for a preset time (normally 2 minutes).
Alarm Device	Device that is activated in case of fire, for example audible and optical alarms like bells, sirens and flashlights.
Alarm Transfer Output	A supervised output for signalling that a fire has occurred. The Alarm Transfer Output is usually used in onshore systems for alerting the Fire Brigade.
Backbone Bus External (BBE)	The main bus outside a Central cabinet used for communication between Modules and stretched central parts. It consists of two redundant RS485 channels, two 24 VDC power lines and the Basic Backup (BBU) signal and Synchronisation Signal (SYNC).
Backbone Bus Internal (BBI)	The main bus inside a Central Cabinet used for communication between Modules. It consists of two redundant RS-485 channels, two 24 VDC power lines and the Basic Backup (BBU) signal and Synchronisation Signal (SYNC).
Backbone Segment	A Backbone Bus may be split in several Segments. Power feeding can be separate for each segment by using one Charger M per segment. Communication can be isolated between segments by using Isolator Modules.
Basic Backup Signal (BBU)	A signal in the Backbone Bus that is used for transmitting the Central's alarm status. The signal is only used when a module in Managed mode loses communication with its Controller Module.
Cause/Effect	The Cause/Effect program defines how the inputs and outputs of the system should react.
CCP Platform	An umbrella name for all the Modules and Devices that can be connected together, e.g. “the Control M 4.3 Module is a member of the CCP Platform”.
Central	A Central is a complete system that can operate autonomously; monitor its detectors and inputs, activate its outputs and display its faults and alarms. If connected to other centrals, it exchanges information with the other centrals via the System Bus, thus allowing all centrals to act as one System. Each central can only have one Backbone Bus.
Central Cabinet	Enclosure to contain a complete or part of a central.
Compact Central	Central Cabinet including basic functionality of Fire Detection System such as: Control Panel, Power supply, Battery backup, Basic I/Os and at least one analogue addressable loop. The Cabinet supplies limited expansion possibilities.
Control Module	The Control M 4.3, the Control M 2.2 and the Control M X can all act as Controller Modules, i.e. be in Controller Mode.
Control Panel	The Control M 4.3 and Control M 2.2 can act as a Control Panel, i.e. they have an HMI and the rights to manipulate and supervise the System.

Controller Mode	Control Modules can run in Controller Mode, i.e. being Master or Hot Standby Master within a central. Control Modules can also be in managed mode, that is being a module that is managed by the master. All other modules are always running in managed mode.
Controller Module	A Control Module that is in Controller Mode (master or hot standby) in a Central or System.
DCS	Distributed Central System (see also Stretched Central).
Detector	A device capable of detecting fire or gas alarms.
Disablement	Disablement of devices such as a Zones or Detectors. Alarms from disabled devices will be inhibited.
ESD System	Emergency Shut Down System, embedded system taking care of safety procedures in case of emergency, for example shut down of fire doors, ventilation etc.
Extension Bus	An additional (RS485) bus used inside a central for intra-central communication. The Extension Bus is typically used for connecting Repeater Modules (that does not require redundant communication and power) and should not be confused with the Backbone Bus.
External Communication	Communication to external entities is called external communication, using for example MODBUS, NMEA or TCMS protocols.
External Control	Outputs used to control external equipment, for example fire doors.
Fault Condition	The state of the system when a fault is detected.
GA-auto	Automatically generated signal according to a pre-defined pattern (e.g. 7 short 1 long signal) for alarm devices or the PA system.
GA-Morse	Signal pattern generated manually via the GA button.
GA	General alarm, common activation of alarm devices and activation of the PA system.
Hot Standby Mode	Controller Modules in Hot Standby Mode can take over the responsibilities of the Controller Module managing a Central.
I/O 70	An Input/Output type providing a different function depending on the configuration of the system. The programmable functions are: • General Input • Fault Input • Conventional Fire Alarm Zone • Output (24 VDC/70 mA)
I/O 700	An Input/Output type providing a different function depending on the configuration of the system. The programmable functions are: • General Input • Fault Input • Output (24 VDC/700 mA)
I/O Module	A module with inputs and/or outputs. I/O modules always run in Managed Mode, that is they must be managed by a Controller Module.
I/O Pin or I/O Signal	An I/O Pin or an I/O Signal is a logical signal, compare to terminal.
Inter-central Communication	Communication between centrals is called inter-central communication.
Interface Channel	A communication channel used to interface the systems with external devices. Interface channels can be configured to communicate on different protocols.
Intra-central Communication	Communication within a central is called intra-central communication. This communication is between modules.

Loop	A common name for the cable, loop devices and other equipment connected to a loop module.
Loop Device	Fire Detectors, Gas Detectors, Manual Call Points and other devices that can be connected to the Loop.
Loop Module	A Module supplying power and is in charge of communication to the loop devices.
Managed Mode	The opposite of Controller Mode. All modules that are managed by a Controller Module are in Managed Mode.
MCS	Multi Central System. A System consisting of more then one Central.
MFZ	Main Fire Zone.
Mode of operation	Modules in the System can take on different roles. Connected to the Backbone Bus they can be in: • Central Controller Mode (Master or Hot Standby) • Central Managed Mode Modules connected to the System Bus can be in: • System Controller Mode (Master or Hot Standby) • System Managed Mode
Module	A module that is a part of the Platform, that is can be used to build Centrals. Modules within the platform generally supply a Backbone Bus interface. Controller Modules also have a System Bus Interface.
Module Address	Module Addresses are set via DIP switches on the Modules.
Mute	Acknowledge and silence the local buzzer and in some cases the alarm devices.
PA	Public Addressing.
Power Output	Output providing power supply, normally used to power external devices.
Pre-Alarm Condition	A condition preceding the Alarm Condition to give early warning for potentially dangerous situations like a smouldering fire.
Programmable Output	Output which signal behaviour is configurable via the Configuration Program.
PSU	Power Supply Unit.
Rate of Rise	Rate of Rise functionality by using C/E commands for setting of a different alarm threshold and temperature rise threshold for heat detectors.
Redundancy	Refers to the quality or state of being redundant, that is exceeding what is necessary or normal. In the System the term is used to describe backup functionality like in Hot Standby Controller Modules.
Relay	Electrically operated switch output, normally providing C/NO/NC contacts for connection of signal receiver.
Repeater Panel	The main attribute for Repeater Panels is that they can show information but not affect the Central (or System) they belong to. The Repeater M 4.3 is a Repeater Panel.
Safe State	Modules enter 'safe state' when they detect system faults. Modules in Safe State put their I/O in a predefined state and stop all communication in order to avoid disturbing system integrity.
SCS	Single Central System.
SMig system	Salwico Safety Management interactive graphics, a PC-based software package providing graphical presentation and control of the System.
Stretched central (DCS)	A central that is physically distributed to two or more physical locations. One location may or may not supply power to another location (segmented) and two locations may or may not have isolated communication lines.

Synchronization Signal	A signal in the Backbone Bus that is used for transmitting synchronization signal used by system Modules to synchronize there behaviour.
System	A System consists of one or more Centrals.
System Bus	The communication bus used for connecting multi-central systems. The System Bus is used for inter-central communication but can also be used for external communication. If inter-central communication redundancy is required, the system bus will consist of a primary and a secondary System Bus.
Terminal	A Terminal is a physical point of connection, compare I/O pin.
Test Condition	Detectors put in the Test Condition (or Test Mode) are inhibited from generating the Alarm Condition but the alarms are displayed on the Control Panels to prove that the tested Detectors are operational.
USB	Universal Serial Bus, a communications bus that may be used to connect flash memories, keyboards, mice or other devices.
Warning Condition	The state of the system when a warning is detected. Warnings are not as serious as faults and only of informative nature, for example that a Gas Detector is in need of calibration.
Zone	A group of detectors located in a geographical area.

7 Quick Guide for Control Panel M 4.3

If Fire or Fault is Flashing

Follow the instructions displayed on the screen and take the appropriate actions.

Note! Only the main actions are described below. Further instructions for the control panel can be found in the Operations chapter in the User Guide.

Mute

1 Press to silence the internal buzzer and mute the alarm indication.

Note! Pressing the MUTE button may inhibit outgoing alarm functions and silence bells and PA system. Ensure proper actions are taken to verify the cause of alarm.

2 Press OK for more details on the screen.

Reset

1 Press to reset the current alarm.

Note! Alarms cannot be reset if the alarm condition remains.

Examples of Disablement

Disabling Addressable Detectors & Manual Call Points

Note! Disabling of individual detectors is only possible on addressable loops.

1 Select *Menu > 3 Disablements > 1 New Disablement > 2 Detectors & Manual Call Points*.

2 Choose zone (Zone number).

3 Choose detector type (Smoke detectors, All detectors, Heat detectors, Flame detectors, or Manual Call Points).

4 Choose detector address or interval (Address number(s)).

5 Choose disablement type (Permanent, Timer, Clock, or Periodic).

6 Enter time (if Timer, Clock, or Periodic was chosen in the previous step).

Reconnecting Disabled Items

All disablements in the system are presented in the disablement list. Any enablement is made from this list.

1 Select *Menu > 3 Disablements > 2 Disablement list*.

2 Choose the disablement you want to cancel.

3 Press .

Consilium

G002859

Index

A

About testing 33
Access level 21
Alarm delay 29
Alarm delay off indicator, Control Panel M 4.3 6
Alarm device indicator, Control Panel M 4.3 6
Arrow keys, Control Panel M 4.3 8
Arrow keys, Repeater M 4.3 18

C

Clock disablement 26
Condition List menu 9
Control Panel M 4.3, Description of numerical keypad 9
Control panel display, Testing 35
Control Panel M 4.3, Description of operational controls 7
Control Panel M 4.3, Description of system indicators 6
Custom indicators, Control Panel M 4.3 6
Custom specific restrictions 21

D

Day mode button, Control Panel M 4.3 9
Day mode button, Repeater M 4.3 19
Disablement list 34
Disablement list 27
Disablement, Acknowledgement 27
Disablements menu 9
Disablements button, Control Panel M 4.3 7
Disabling a conventional zone 27
Disabling addressable detectors 28
Disabling alarm devices 28
Disabling alarm transfer output 30
Disabling an addressable zone 28
Disabling external outputs 29
Disabling manual call points 28
Download configuration file 31

E

Enter button, Control Panel M 4.3 .....
Erase button, Control Panel M 4.3 .....
Escape button, Control Panel M 4.3 .....

F

Fault Alarm menu .....
Fault alarm, Information displayed in the Control Panel .....
Fault alarm, Mute .....
Fault alarm, Reset from the Fault list .....
Fault alarm, Reset .....
Fault alarm, Reset all faults .....
Fault button, Control Panel M 4.3 .....
Fire alarm button, Control Panel M 4.3 .....
Fire Alarm menu .....
Fire alarm, reset .....
Fire alarm, Reset several alarms .....
Fire alarm, From conventional zones .....
Fire detection system .....
Fire detection system, System description .....
Fire alarm, Information displayed in the Control Panel .....
Fire alarm, Mute .....
Fire history list .....
Fire-Fault-Dis. button, Repeater M 4.3 .....

G

General alarm system .....

H

History menu .....

L

Lamp test buttons, Repeater M 4.3 .....
Local Mute button, Repeater M 4.3 .....
Login menu .....
Login, Access codes .....

M

Menu .....
Menu button, Control Panel M 4.3 .....
Multiple alarms button, Control Panel M 4.3 .....
Mute button, Fault alarm .....
Mute button, Fire alarm .....
Mute button, Control Panel M 4.3 .....

N

Night mode button, Control Panel M 4.3 .....
Night mode button, Repeater M 4.3 .....

O

OK button, Control Panel M 4.3 .....

P

Periodic disablement .....
Permanent disablement .....
Power indicator, Control Panel M 4.3 .....
Power indicator, Repeater M 4.3 .....
Pre-Alarm button, Control Panel M 4.3 .....
Pre-Alarm list .....

R

Reconnecting disabled items .....
Reconnecting periodic disablements .....
Remove all disablements .....

Repeater M 4.3, Description of keys and indicators 18
Reset button, Fault alarm 25
Reset button, fire alarm 24
Reset test mode 34
Reset button, Control Panel M 4.3 8

S

Service menu 9
Service Menu 31
Settings menu 9
Shortcuts button, Control Panel M 4.3 7
Status button, Control Panel M 4.3 8
System fault indicator, Control Panel M 4.3 6

T

Test Equipment 34
Test mode overview 33
Test indicator, Control Panel M 4.3 6
Test the control panel display 35
Testing a fire-detecting zone 33
Timer disablement 26

U

USB connection, Control Panel M 4.3 6

W

Warning indicator, Control Panel M 4.3 6

Z

Zone indicator, Control Panel M 4.3 6
Zone, Test mode 33

Global Service and Support

Own companies

Sales- and service representatives

Consilium is constantly increasing and improving its global sales and service organisation in order to provide our customers with the most competent service and support. Today Consilium has established own companies in 16 countries plus sales and service representatives in more than 50 countries. You will find updated contact information on our web-site www.consilium.se.

Consilium

www.consilium.se